allcove

BEACH CITIES HEALTH DISTRICT

LEED
ZC SUSTAINABILITY
859 25TH STREET
SANTA MONICA, CA 90403
(310) 560-4856

SPECIFICATIONS
STANSEN SPECIFICATIONS
475 23RD AVENUE
SAN MATEO, CA 94403
(650) 570-6411

STRUCTURAL ENGINEER
LABIB FUNK + ASSOCIATES
319 MAIN STREET
EL SEGUNDO, CA 90245
(213) 239-9700

MECHANICAL + PLUMBING ENGINEER
LEWISROSS ASSOCIATES, INC.
25061 AVENUE STANFORD, SUITE 120
SANTA CLARITA, CA 91355
(818) 886-2190

ELECTRICAL ENGINEER
LUCCI & ASSOCIATES, INC
3251 CORTE MALPASO, SUITE 511
CAMARILLO, CA 93012
(805) 389-6520

DESIGN TEAM

ARCHITECT
PAUL MURDOCH ARCHITECTS
6310 SAN VICENTE BLVD., SUITE 400
LOS ANGELES, CA 90048
(310) 358-0993

LANDSCAPE ARCHITECT
PAMELA BURTON & COMPANY
1430 OLYMPIC BLVD
SANTA MONICA, CA 90404
(310) 828-6373

CIVIL ENGINEER
LABIB FUNK + ASSOCIATES
319 MAIN STREET
EL SEGUNDO, CA 90245
(213) 239-9700

OWNER

BEACH CITIES HEALTH DISTRICT
1200 DEL AMO STREET
REDONDO BEACH, CA 90277
(310) 374-3426

OWNER REPRESENTATIVE

TURNER + TOWNSEND HEERY
2555 TOWNSGATE ROAD, SUITE 312
WESTLAKE VILLAGE, CA 91361
(818) 591-8555

N

PAUL MURDOCH
ARCHITECTS

6310 SAN VICENTE BLVD. SUITE 400
LOS ANGELES, CA 90048
T. 310 358-0993

THE DRAWINGS AND SPECIFICATIONS AND IDEAS, DESIGNS, AND ARRANGEMENTS REPRESENTED THEREBY ARE AND SHALL REMAIN THE PROPERTY OF THE ARCHITECT AND NO PART THEREOF SHALL BE COPIED, DISCLOSED TO OTHERS, OR USED IN CONNECTION WITH ANY WORK OR PROJECT OTHER THAN THE SPECIFIC PROJECT FOR WHICH THEY HAVE BEEN PREPARED AND DEVELOPED WITHOUT THE WRITTEN CONSENT OF THE ARCHITECT. VISUAL CONTACT WITH THESE DRAWINGS OR SPECIFICATIONS SHALL CONSTITUTE CONCLUSIVE EVIDENCE OF ACCEPTANCE OF THESE RESTRICTIONS. WRITTEN DIMENSIONS ON THESE DRAWINGS SHALL HAVE PRECEDENCE OVER SCALED DIMENSIONS. CONTRACTORS SHALL VERIFY AND BE RESPONSIBLE FOR ALL DIMENSIONS AND CONDITIONS ON THE JOB AND THIS OFFICE MUST BE NOTIFIED OF ANY VARIATIONS FROM THE DIMENSIONS AND CONDITIONS SHOWN BY THESE DRAWINGS. SHOP DETAILS MUST BE SUBMITTED TO THIS OFFICE FOR REVIEW BEFORE PROCEEDING WITH FABRICATION.

NO.	DATE	REVISION

allcove
BEACH CITIES
HEALTH DISTRICT

100% PRELIMINARY DESIGN SUBMITTAL

PMA PROJECT NO.
23007

DRAWING TITLE
COVER SHEET

SCALE
N.T.S.

DATE
02/28/2024

DRAWN E.C. CHECKED P.M.

SHEET NO.
G001

ABBREVIATIONS

ABV.	ABOVE
A/C	AIR CONDITIONING
ACC.	ACCESS
ACOUS.	ACOUSTICAL
A.T.	ACOUSTICAL TILE
ADJ.	ADJUSTABLE
A.F.F.	ABOVE FINISH FLOOR
AGR.	AGGREGATE
ALUM., AL	ALUMINUM
ALT.	ALTERNATE
ANG., L	ANGLE
APPROX.	APPROXIMATE
A.P.	ACCESS PANEL
ARCH.	ARCHITECTURAL
A.D.	AREA DRAIN
ASB.	ASBESTOS
ASPH.	ASPHALT
@	AT
AHU.	AIR HANDLING UNIT
BM.	BEAM
BET.	BETWEEN
BITUM.	BITUMINOUS
BLK.	BLOCK
BLKG.	BLOCKING
BD.	BOARD
BOL.	BOLLARD
BTM.	BOTTOM
BLDG.	BUILDING
BIOHAZ.	BIOHAZARD
BSMT.	BASEMENT
CAB.	CABINET
C.I.	CAST IRON
C.I.P.	CAST IN PLACE
C.B.	CATCH BASIN
CLKG.	CAULKING
CLG.	CEILING
CEM.	CEMENT
CT.	CENTER
CER.	CERAMIC
CH.	CHANNEL
C.T.	CERAMIC TILE
CL	CENTERLINE
CLR.	CLEAR
CLO.	CLOSET
COL.	COLUMN
CONC.	CONCRETE
CONN.	CONNECTION
CONSTR.	CONSTRUCTION
CONT.	CONTINUOUS
CORR.	CORRIDOR
CNTR.	COUNTER
CTSK.	COUNTERSUNK
C.U.	CLEAN UTILITY
C.W.	CURTAIN WALL
DBL.	DOUBLE
DEPT.	DEPARTMENT
DET.	DETAIL
D.F.	DOUGLAS FIR
DIA.	DIAMETER
DIAG.	DIAGONAL
DIM.	DIMENSION
DISP.	DISPENSER
D.O.	DOOR OPENING
DN.	DOWN
DS.	DOWNSPOUT
DWR.	DRAWER
DWG.	DRAWING
D.F.	DRINKING FOUNTAIN
D.S.P.	DRY STANDPIPE
EA.	EACH
E.	EAST
E.D.F.	ELECTRIC DRINKING FOUNTAIN
E.W.F.	ELECTRIC WATER COOLER
ELEC.	ELECTRICAL
E.P.	ELECTRICAL PANEL BOARD
EL.	ELEVATION
ELEV.	ELEVATOR
EMER.	EMERGENCY
ENCL.	ENCLOSURE
EQ.	EQUAL
EQPT.	EQUIPMENT
(E)	EXISTING
EOS	EDGE OF SLAB
EXP.	EXPANSION
E.J.	EXPANSION JOINT
EXH.	EXHAUST
EXPO.	EXPOSED
EXT.	EXTERIOR
E.W.	EACH WAY
EXTR.	EXTRUSION
F.O.C.	FACE OF CONCRETE
F.O.F.	FACE OF FINISH
F.O.G.	FACE OF GYP. BD.
F.O.S.	FACE OF STUD
FIN.	FINISH
F.FL.	FINISH FLOOR LINE
FT.	FEET, FOOT
F.A.	FIRE ALARM
F.E.	FIRE EXTINGUISHER
F.E.C.	FIRE EXTINGUISHER CABINET
F.H.C.	FIRE HOSE CABINET
FPRF.	FIRE PROOF
FLASH.	FLASHING
F.B.	FLAT BAR
FLEX.	FLEXIBLE
FL.	FLOOR
F.D.	FLOOR DRAIN
FLUOR.	FLUORESCENT
FTG.	FOOTING
FDN.	FOUNDATION
F.S.	FULL SIZE
FURR.	FURRING
FUT.	FUTURE
GALV.	GALVANIZED
GA.	GAUGE
GL.	GLASS
G.B.	GRAB BAR
G.F.R.G.	GLASS FIBER REINFORCED GYPSUM
GR.	GRADE
GND.	GROUND
GVL.	GRAVEL
GYP.	GYPSUM
GYP. BD.	GYPSUM WALLBOARD
HDW.	HARDWARE
HDWD.	HARDWOOD
HT.	HEIGHT
HC.	HANDICAP
H.	HIGH
H.M.	HOLLOW METAL
HRZ.	HORIZONTAL
H.B.	HOSE BIBB
H.S.	HEAT STRENGTHENED
HVAC	HEATING/VENTILATING/AIR CONDITIONING
HR.	HOUR
I.D.	INSIDE DIAMETER
I.R.	INSIDE RADIUS
IN.	INCH
INCL.	INCLUDED
INFO.	INFORMATION
INSUL.	INSULATION
INT.	INTERIOR
ISOL.	ISOLATION
JAN.	JANITOR
JT., JNT.	JOINT
KIT.	KITCHEN
L.	LENGTH
L.B.	LAG BOLT
LAB.	LABORATORY
LAM.	LAMINATE
LAV.	LAVATORY
LT.	LIGHT
LKR.	LOCKER
LOC.	LOCATED, LOCATION
LVR.	LOUVER
LVT.	LUXURY VINYL TILE
M.H.	MANHOLE
MFR.	MANUFACTURER
M.O.	MASONRY OPENING
MAT.	MATERIAL
MAX.	MAXIMUM
MECH.	MECHANICAL
M.B.	MECHANICAL BOLT
M.E.P.	MECHANICAL, ELECTRICAL + PLUMBING
M.E.P.T.	MECHANICAL, ELECTRICAL + PLUMBING + TELE.
M.C.	MEDICINE CABINET
MED.	MEDIUM
MEMB.	MEMBRANE
MEZZ.	MEZZANINE
MTL.	METAL
MIN.	MINIMUM
MIR.	MIRROR
MISC.	MISCELLANEOUS
MTD.	MOUNTED
MUL.	MULLION
NOM.	NOMINAL
N.	NORTH
N.I.C.	NOT IN CONTRACT
N.T.S.	NOT TO SCALE
NO.	NUMBER
N.S.	NURSE STATION
N.S.T.	NON STRESS TEST
O/	OVER
OBS.	OBSERVATION
OFF.	OFFICE
O.C.	ON CENTER
OPNG.	OPENING
OPP.	OPPOSITE
O.D.	OUTSIDE DIAMETER
O.A.	OVERALL
O.F.C.I.	OWNER FURNISHED CONTRACTOR INSTALLED
O.F.O.I.	OWNER FURNISHED OWNER INSTALLED
O.R.	OUTSIDE RADIUS
PR.	PAIR
PERF.	PERFORATED
PIV.	PIVOT
PNL.	PANEL
PNT.	PAINT
PFB.	PREFABRICATE
P.T.D.	PAPER TOWEL DISPENSER
P.T.R.	PAPER TOWEL RECEPTACLE
PTD.	PAINTED
PTN.	PARTITION
P.A.	PLANTED AREA
PLAS.	PLASTER
P.LAM.	PLASTIC LAMINATE
PL./PLT.	PLATE
PLWD.	PLYWOOD
PT.	POINT
PRCST.	PRECAST
PTS.	PNEMATIC TUBE STATION
P.S.I.	POUNDS/SQUARE INCH
PVC.	POLYVINYLCHLORIDE
Q.T.	QUARRY TILE
RAD.	RADIUS
R.W.L.	RAIN WATER LEADER
R.A.F.	RAISED ACCESS FLOOR
RDWD.	REDWOOD
REF.	REFERENCE
REFL.	REFLECTED
REFR.	REFRIGERATOR
RET.	RETAINING
RGST.	REGESTER
REINF.	REINFORCED
REQ'D.	REQUIRED, REQUIREMENTS
RES.	RESILIENT
REV.	REVISION
R.	RISER
R.D.	ROOF DRAIN
RM.	ROOM
R.O.	ROUGH OPENING
SCHED.	SCHEDULE
SECT.	SECTION
S.SK.	SERVICE SINK
SHT.	SHEET
SH.	SHELF
SHRW.	SHOWER
SIM.	SIMILAR
S.D.	SOAP DISPENSER
S.C.	SOLID CORE
S.	SOUTH
SPEC.	SPECIFICATION
SQ.	SQUARE
S.S.	STAINLESS STEEL
STD.	STANDARD
STA.	STATION
STL.	STEEL
STO.	STORAGE
STRUCT.	STRUCTURAL
SUSP.	SUSPENDED
SYM.	SYMMETRICAL
SUPV.	SUPERVISOR
S.U.	SOILED UTILITY
TEL.	TELEPHONE
T.V.	TELEVISION
TEMP.	TEMPERED
TER.	TERRAZZO
THK.	THICK
T.P.D.	TOILET PAPER DISPENSER
T. + G.	TONGUE + GROOVE
T.O.	TOP OF
T.O.C.	TOP OF CURB/ TOP OF CONC.
T.O.P.	TOP OF PAVEMENT/ TOP OF PARAPET
T.O.S.	TOP OF STEEL/ TOP OF SLAB
T.O.W.	TOP OF WALL
T.B.	TOWEL BAR
T.	TREAD
TYP.	TYPICAL
TOI.	TOILET
UNF.	UNFURNISHED
UR.	URINAL
U.N.O.	UNLESS NOTED OTHERWISE
VERT.	VERTICAL
VEST.	VESTIBULE
V.T.R.	VENT THROUGH ROOF
WSCT.	WAINSCOT
W.C.	WATER CLOSET
WP.	WATERPROOFING
WT.	WEIGHT
W.	WEST
WIN.	WINDOW
W/	WITH
W/O	WITHOUT
WD.	WOOD
WPT.	WORKING POINT
W.W.F.	WELDED WIRE FABRIC

SYMBOL LEGEND

GRID BUBBLE	XX
CENTERLINE	
LIMIT OF WORK	
PROPERTY LINE	
ELEMENT BELOW OR N.I.C. AS NOTED	
ELEMENT OVERHEAD	
MATCH LINE	
SECTION / WALL SECTION	X / AXXX
ELEVATION REFERENCE	X / AXXX
DETAIL REFERENCE	X / AXXX
INTERIOR ELEVATION REFERENCE	A B X AXXX D C
POINT ELEVATION / LEVEL TARGET	
WINDOW TYPE	WXXX
DOOR NUMBER	DXXX
WALL ASSEMBLY TYPE	ID
REVISION NUMBER	0
ROOM TAG	ROOM NAME / ROOM #

DRAWING INDEX

GENERAL

G001	COVER SHEET
G002	DRAWING INDEX, SYMBOL LEGEND + ABBREVIATIONS
G003	CODE ANALYSIS SHEET
G004	CODE ANALYSIS SHEET: EXITING

CIVIL

C000	TITLE SHEET
C100	DEMOLITION AND EROSION CONTROL PLAN
C200	ROUGH GRADING PLAN
C201	ROUGH GRADING SECTIONS
C210	GRADING AND DRAINAGE PLAN
C300	LOW IMPACT DEVELOPMENT PLAN
C400	UTILITY PLAN

LANDSCAPE

L100	HARDSCAPE PLAN
L200	PLANTING PLAN
L300	LANDSCAPE DETAILS

ARCHITECTURAL

A100	BCHD CAMPUS SITE PLAN
A101	SITE PLAN
A111	FIRST FLOOR PLAN
A112	SECOND FLOOR PLAN
A113	ROOF PLAN
A114	FIRST AND SECOND FURNITURE FLOOR PLAN
A121	FIRST FLOOR REFLECTED CEILING PLAN
A122	SECOND FLOOR REFLECTED CEILING PLAN
A200	SITE WALL ELEVATIONS
A201	EXTERIOR ELEVATIONS
A202	EXTERIOR ELEVATIONS
A301	BUILDING SECTIONS
A302	BUILDING SECTIONS
A303	BUILDING SECTIONS
A304	BUILDING SECTIONS
A401	3D EXTERIOR VIEWS
A402	3D EXTERIOR VIEWS
A403	3D EXTERIOR VIEWS
A501	CASEWORK 3D VIEWS AND NOTES FIRST FLOOR
A502	CASEWORK 3D VIEWS AND NOTES SECOND FLOOR
A600	DOOR, WINDOW AND FINISH SCHEDULE

MECHANICAL

M-0.1	MECHANICAL LEAD SHEET
M-0.2	HVAC ZONING SCHEME
M-0.3	SCHEDULES
M-1.0	1ST FLOOR HVAC PLAN
M-1.1	2ND FLOOR HVAC PLAN
M-1.2	ROOF HVAC PLAN

PLUMBING

P-0.1	PLUMBING LEAD SHEET
P-0.2	PLUMBING SITE PLAN
P-1.0	BELOW GROUND PLUMBING PLAN
P-1.1	FIRST FLOOR PLUMBING PLAN
P-1.2	SECOND FLOOR PLUMBING PLAN
P-1.3	ROOF PLUMBING PLAN
P-3.0	RISER DIAGRAMS
P-5.0	PLUMBING DETAIL
PS-1.0	FIRST FLOOR STORM WATER PLAN
PS-1.1	SECOND FLOOR STORM WATER PLAN
PS-1.2	ROOF STORM WATER PLAN

ELECTRICAL

E100	GENERAL NOTES, ABBREVIATIONS, SYMBOLS & DRAWING LIST
E130	SITE PLAN
E140	ENLARGED PROJECT ELECTRICAL PLAN
E141	ELECTRICAL SERVICE DETAILS
E200	ELECTRICAL SINGLE LINE DIAGRAM
E201	PANEL SCHEDULES
E300	LIGHTING AND CONTROL SCHEDULE
E301	FIRST LEVEL LIGHTING PLAN
E302	SECOND LEVEL LIGHTING PLAN
E400	SITE EV CHARGER PLAN
E401	FIRST LEVEL POWER PLAN
E402	SECOND LEVEL POWER PLAN
E410	ENLARGED POWER PLANS
E420	ELECTRICAL SCHEDULE FOR MECHANICAL EQUIPMENT
E421	FIRST LEVEL MECHANICAL POWER PLAN AND
E422	SECOND LEVEL MECHANICAL POWER PLAN
E423	ROOF POWER PLAN
E600	ELECTRICAL DETAILS
E601	ELECTRICAL DETAILS

TELECOM

T001	TELECOM GENERAL NOTES AND SHEET INDEX
T002	TELECOM ABBREVIATIONS NOTES AND SYMBOLS
T100	TELECOM SITE PLAN
T111	TELECOM FIRST FLOOR PLAN
T112	TELECOM SECOND FLOOR PLAN
T211	TELECOM FIRST FLOOR REFLECTED CEILING PLAN
T212	TELECOM SECOND FLOOR REFLECTED CEILING PLAN
T401	TELECOM RISER DIAGRAM
T451	TELECOM EQUIPMENT PLAN LAYOUTS

AUDIO VISUAL

AV001	AV GENERAL NOTES AND SHEET INDEX
AV101EQ	AV FIRST FLOOR EQUIPMENT PLAN
AV102EQ	AV SECOND FLOOR EQUIPMENT PLAN
AV201EQ	AV FIRST FLOOR REFLECTED CEILING PLAN
AV202EQ	AV SECOND FLOOR REFLECTED CEILING PLAN

SECURITY

SC001	SECURITY GENERAL NOTES AND SHEET INDEX
SC002	SECURITY ABBREVIATIONS NOTES AND SYMBOLS
SC100	SECURITY SITE PLAN
SC111	SECURITY FIRST FLOOR PLAN
SC112	SECURITY SECOND FLOOR PLAN
SC401	SECURITY RISER DIAGRAM

PAUL MURDOCH ARCHITECTS

6310 SAN VICENTE BLVD. SUITE 400
LOS ANGELES, CA 90048
T. 310 358-0993

THE DRAWINGS AND SPECIFICATIONS AND IDEAS, DESIGNS, AND ARRANGEMENTS REPRESENTED THEREBY ARE AND SHALL REMAIN THE PROPERTY OF THE ARCHITECT AND NO PART THEREOF SHALL BE COPIED, DISCLOSED TO OTHERS, OR USED IN CONNECTION WITH ANY WORK OR PROJECT OTHER THAN THE SPECIFIC PROJECT FOR WHICH THEY HAVE BEEN PREPARED AND DEVELOPED WITHOUT THE WRITTEN CONSENT OF THE ARCHITECT. VISUAL CONTACT WITH THESE DRAWINGS OR SPECIFICATIONS SHALL CONSTITUTE CONCLUSIVE EVIDENCE OF ACCEPTANCE OF THESE RESTRCTIONS. WRITTEN DIMENSIONS ON THESE DRAWINGS SHALL HAVE PRECEDENCE OVER SCALED DIMENSIONS. CONTRACTORS SHALL VERIFY AND BE RESPONSIBLE FOR ALL DIMENSIONS AND CONDITIONS ON THE JOB AND THIS OFFICE MUST BE NOTIFIED OF ANY VARIATIONS FROM THE DIMENSIONS AND CONDITIONS SHOWN BY THESE DRAWINGS. SHOP DETAILS MUST BE SUBMITTED TO THIS OFFICE FOR REVIEW BEFORE PROCEEDING WITH FABRICATION.

NO.	DATE	REVISION

allcove
BEACH CITIES HEALTH DISTRICT

100% PRELIMINARY DESIGN SUBMITTAL

PMA PROJECT NO.
23007

DRAWING TITLE
DRAWING INDEX, SYMBOL LEGEND + ABBREVIATIONS

SCALE
N.T.S.

DATE
02/28/2024

DRAWN E.C. CHECKED P.M.

SHEET NO.
G002

ADA ACCESSIBLE DEVICE MOUNTING HEIGHTS

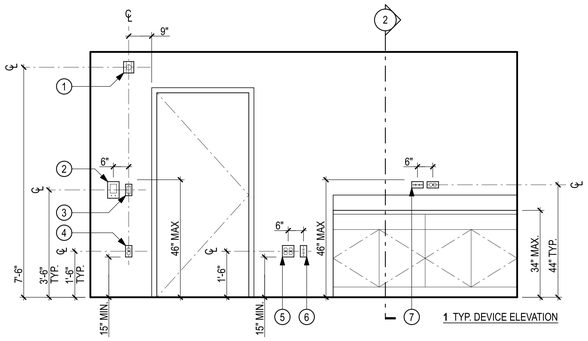

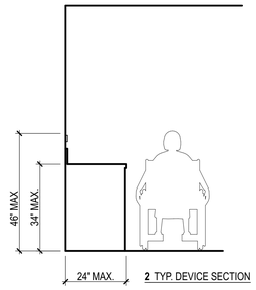

KEYNOTES

1. HORN / STROBE. REFER TO FIRFE ALARM DWGS.
2. THERMOSTAT. REFER TO MECH DWGS.
3. LIGHT SWITCH. REFER TO ELEC. DWGS.
4. DUPLEX RECEPTACLE. REFER TO ELEC. DWGS.
5. QUADRUPLEX RECEPTACLE. REFER TO ELEC. DWGS.
6. DATA RECEPTACLE. REFER TO TELE. DWGS.
7. HORIZONTAL RECEPTACLES ABV. COUNTERS TYP. REFER TO CASEWORK DWGS.

CALCULATION FOR PUBLIC RESTROOMS

NO.	ROOM NAME	NET AREA IN SQ. FT.	OCCUPANT LOAD FACTOR	OCCUPANT LOAD
B OCCUPANCY			1 per 150SF	
	TOTAL	**6,360**	**150**	**43**
	INTAKE CHECK-IN	105		
	LOBBY + RECEPTION	691		
	WORKSTATIONS	100		
	CAFÉ	228		
	LARGE GROUP MEETING ROOM	542		
	RECEPTION DESK	277		
	WORK ROOM	625		
	PRINTER AREA	24		
	OFFICE	192		
	BREAKROOM	171		
	STORAGE	47		
	FIRE RISER	15		
	MECHANICAL ROOM	17		
	THE COVE	1,415		
	RECEPTION DESK	131		
	SENSORY ROOM	185		
	GROUP ROOM	158		
	GROUP ROOM	158		
	CHAT ROOM	114		
	CHAT ROOM	145		
	CHAT ROOM	111		
	CHAT ROOM	114		
	CHAT ROOM	145		
	CHAT ROOM	111		
	EXAM ROOM	175		
	PRIVACY ROOM	82		
	CLEAN ROOM	49		
	DIRTY ROOM	49		
	STORAGE	60		
	STORAGE	57		
	JANITOR ROOM	67		

2022 CALIFORNIA PLUMBING CODE TABLE 422.1 MINIMUM PLUMBING FACILITIES

TOTAL REQUIRED FIXTURES	WATER CLOSET	URINAL	LAVATORY	DRINKING FOUNTAIN
	1 - 25	-	1 - 50	1 - 150
FEMALE (50% = 22 OCCUPANTS)	**2**	**0**	**1**	**1**
	1 - 50	1 - 100	1 - 75	
MALE (50% = 22 OCCUPANTS)	**1**	**1**	**1**	**1**

TOTAL PROVIDED FIXTURES	WATER CLOSET	URINAL	LAVITORY	DRINKING FOUNTAIN
UNISEX	**4**	**2**	**4**	**2**

CALCULATIONS BASED ON CALIFORNIA PLUMBING CODE, CHAPTER 4:
TABLE A OCCUPANT LOAD FACTOR AND TABLE 422.1

VEHICLE PARKING TABLES

TOTAL PARKING SPACES

1 SPACE PER 300SF = 9,400 / 300 = **32 SPARKING PACES TOTAL**

PARKING SPACES		REQUIRED	PROVIDED	REMARKS
	TOTAL PARKING SPACES	**32**	**8**	
AP	ACCESSIBLE PARKING SPACES	1	1	A
VA	VAN ADA ACCESSIBLE PARKING SPACES	1	1	B
EVC	ELECTRIC VEHICLE CAPABLE PARKING SPACES	8	8	C
EVCS	ELECTRIC VEHICLE CHARGING STATIONS	3	5	D
EVCS-AP	EV CHARGING STATION ADA ACCESSIBLE SPACES	1	1	E
EVCS-VA	EV CHARGING STATION ADA VAN ACCESSIBLE SPACES	1	1	F

REMARKS

A. NUMBER OF REQUIRED ACCESSIBLE PARKING SPACES FOR 26-50 TOTAL SPACES PER CBC TABLE **11B-208.2**.
B. NUMBER OF REQUIRED VAN ACCESSIBLE SPACES PROVIDED PER CBC **11B-208.2.4.**
C. NUMBER OF REQUIRED EV CAPABLE FOR 26-50 TOTAL SPACES PER CAL GREEN TABLE **5.106.5.3.1.**
D. NUMBER OF REQUIRED EVCS FOR 26-50 TOTAL SPACES PER CAL GREEN TABLE **5.106.5.3.1.**
E. NUMBER OF REQUIRED ADA ACCESSIBLE ELECTRIC VEHICLE CHARGING SPACES FOR 7 TOTAL EVCS SPACES PER CBC TABLE **11B-228.3.2.1.**
F. NUMBER OF REQUIRED ADA VAN ACCESSIBLE ELECTRIC VEHICLE CHARGING SPACES FOR 7 TOTAL EVCS SPACES PER CBC TABLE **11B-228.3.2.1.**

BICYCLE PARKING TABLE

BICYCLE PARKING		REQUIRED	PROVIDED
SBP	STAFF LONG TERM BICYCLE PARKING (32 X 5% =2)	2	2
PBP	PUBLIC BICYCLE PARKING (32 X 5% =6)	2	10*

* PUBLIC BICYCLE PARKING TO INCLUDE E-BIKE CHARGING INFRASTRUCTURE.
REFER TO CAL GREEN 5.105.4.1.1 FOR SHORT TERM BICYCLE PARKING REQUIREMENTS
REFER TO CAL GREEN 5.105.4.1.2 LONG TERM BICYCLE PARKING REQUIREMENTS

FIRE RESISTANCE REQUIREMENTS

THE DESIGN BUILD TEAM SHALL VERIFY ALL FIRE RESISTANCE REQ. AND PROVIDE ASSEMBLIES AS REQ'D. BY CODE.

STRUCTURAL BUILDING ELEMENTS (CBC TABLE 601) (CBC TABLE 602)	MINIMUM FIRE RESISTANCE RATING
STRUCTURAL FRAME	0 HOUR
STRUCTURAL FRAME (SUPPORTING ROOF ONLY)	0 HOUR
BEARING WALLS (INTERIOR / EXTERIOR)	0 HOUR
FLOOR CONSTRUCTION	0 HOUR
ROOF CONSTRUCTION	0 HOUR
NON-STRUCTURAL ELEMENTS	0 HOUR
	MINIMUM FIRE RESISTANCE RATING
EXTERIOR WALLS / PARTITIONS (FIRE SEPARATION DISTANCE, X: X < 5 FT)	1 HOUR
EXTERIOR WALLS / PARTITIONS (FIRE SEPARATION DISTANCE, X: 5 < X < 10 FT)	1 HOUR
EXTERIOR WALLS / PARTITIONS (FIRE SEPARATION DISTANCE, X: 10 < X < 30 FT)	0 HOUR
EXTERIOR WALLS / PARTITIONS (FIRE SEPARATION DISTANCE, X: 30 < X FT)	0 HOUR
EXTERIOR DOORS AND WINDOWS (CBC TABLE 705.8)	NO LIMIT
INTERIOR WALLS AND PARTITIONS NOT OTHERWISE NOTED	REFER TO FLOOR PLAN
CORRIDORS (CBC TABLE 1020.1)	MINIMUM FIRE RESISTANCE RATING
ALL CORRIDORS	NO REQUIREMENT

INTERIOR FINISH

INTERIOR FINISHES FOR WALLS, CEILINGS, AND FLOORS WILL BE PROVIDED IN ACCORDANCE WITH THE REQUIREMENTS OF CBC SECTIONS 803 AND 804. FINISH REQUIREMENTS FOR WALLS IN A FULLY SPRINKLERED BUILDING ARE PROVIDED AS DESCRIBED IN THE TABLE BELOW.

	EXIT ENCLOSURES AND EXIT PASSAGEWAYS	CORRIDORS	ROOMS
GROUP B	CLASS B	CLASS C	CLASS C

CALIFORNIA ENERGY CODE

THE CALIFORNIA ENERGY CODE SECTION 10-103 REQUIRES ACCEPTANCE TESTING ON ALL NEWLY INSTALLED LIGHTING CONTROLS, MECHANICAL SYSTEMS, ENVELOPES, AND PROCESS EQUIPMENT.AFTER INSTALLATION AND BEFORE PROJECT COMPLETION, AN ACCEPTANCE TEST IS A FUNCTIONAL PERFORMANCE TEST TO HELP ENSURE THAT NEWLY INSTALLED EQUIPMENT IS OPERATING AND IN COMPLIANCE WITH THE ENERGY CODE.

LIGHTING CONTROLS ACCEPTANCE TESTS MUST BE PERFORMED BY A CERTIFIED LIGHTING CONTROLS ACCEPTANCE TEST TECHNICIAN (ATT).

MECHANICAL SYSTEM ACCEPTANCE TESTS MUST BE PERFORMED BY A CERTIFIED MECHANICAL ATT FOR PROJECTS SUBMITTED ON OR AFTER OCTOBER 1, 2021.

ENVELOPE AND PROCESS EQUIPMENT ACCEPTANCE TESTS SHALL BE PERFORMED BY THE INSTALLING CONTRACTOR, ENGINEER/ARCHITECT OF RECORD OR THE OWNER'S AGENT.

A LISTING OF CERTIFIED ATT CAN BE FOUND AT: HTTPS://WWW.ENERGY.CA.GOV/PROGRAMS-AND-TOPICS/PROGRAMS/ACCEPTANCE-TEST-TECHNICIAN-CERTIFICATION-PROVIDER-PROGRAM/ACCEPTANCE.

THE ACCEPTANCE TESTING PROCEDURES MUST BE REPEATED, AND DEFICIENCIES MUST BE CORRECTED BY THE BUILDER OR INSTALLING CONTRACTOR UNTIL THE CONSTRUCTION/INSTALLATION OF THE SPECIFIED SYSTEMS CONFORM AND PASS THE REQUIRED ACCEPTANCE CRITERIA.

PROJECT INSPECTORS WILL COLLECT THE FORMS TO CONFIRM THAT THE REQUIRED ACCEPTANCE TESTS HAVE BEEN COMPLETED.

CODE SUMMARY

FIRE PROTECTION SYSTEMS

1. AUTOMATIC FIRE SPRINKLERS WILL BE PROVIDED THROUGHOUT THIS BUILDING IN ACCORDANCE WITH 2022 CBC/CFC SECTION 903.
2. A FIRE ALARM SYSTEM WILL BE PROVIDED IN ACCORDANCE WITH 2022 CBC/CFC SECTION 907.
3. PORTABLE FIRE EXTINGUISHERS WILL BE PROVIDED IN ACCORDANCE WITH 2022 CBC/CFC SECTION 906.

MEANS OF EGRESS REQUIREMENTS

A. OCCUPANT LOAD FACTORS (2022 CBC TABLE 1004.1.2)

1. ASSEMBLY WITHOUT FIXED SEATS (CONCENTRATED) - 7 SF NET PER PERSON
2. ASSEMBLY - UNCONCENTRATED (CONFERENCE ROOM) - 15 SF NET PER PERSON
3. BUSINESS (OFFICE) - 150 SF GROSS PER PERSON
4. CIRCULATION - 100 SF GROSS PER PERSON
5. LOCKER ROOMS - 50 SF GROSS PER PERSON
6. MECHANICAL - 300 SF GROSS PER PERSON
7. STORAGE - 300 SF GROSS PER PERSON

B. SEPARATION OF EXITS (2022 CBC SECTION 1007.1.1 EXCEPTION 2)
WHERE TWO EXITS, EXIT ACCESS DOORWAYS, EXIT ACCESS STAIRWAYS OR RAMPS, OR ANY COMBINATION THEREOF ARE REQ'D. FROM ANY PORTION OF THE EXIT ACCESS THEY SHALL BE PLACED A DISTANCE APART EQUAL TO NOT LESS THAN ONE-THIRD THE LENGTH OF THE MAXIMUM OVERALL DIAGONAL DIM. OF THE AREA SERVED.

C. EXIT WIDTH (2022 CBC SECTION 1005.3.2)

1. LEVEL MEANS OF EGRESS COMPONENTS (DOORS, CORRIDORS): 0.2 INCHES PER OCCUPANT

D. EGRESS BASED ON OCCUPANT LOAD (2022 CBC TABLE 1006.3.1 AND TABLE 1006.3.2(2))

1. STORAGE AREAS WITH AN OCCUPANT LOAD OF 29 OR LESS MAY HAVE ONLY ONE MEANS OF EGRESS
2. ASSEMBLY AREAS, BUSINESS AREAS AND MECHANICAL SPACES WITH AN OCCUPANT LOAD OF 49 OR LESS MAY HAVE ONLY ONE MEANS OF EGRESS
3. FOR ALL OCCUPANCIES WITH AN OCCUPANT LOAD OF FEWER THAN 500 BUT MORE THAN 49 (OR 29 IN STORAGE AREAS) MUST HAVE AT LEAST TWO MEANS OF EGRESS
4. FOR OCCUPANT LOAD OF 501 - 1,000 FOR ALL OCCUPANCIES MUST HAVE AT LEAST 3 MEANS OF EGRESS

E. MAXIMUM COMMON PATH OF TRAVEL IN BUILDINGS EQUIPPED THROUGHOUT WITH AN AUTOMATIC SPRINKLERE SYSTEM IN ACCORDANCE WITH SECTION 903.3.1.1 OR 903.3.1.2 (2022 CBC TABLE 1006.2.1)

1. GROUP A3 - 75 FT
2. GROUP B - 100 FT
3. GROUP S-1 - 100 FT

F. EXIT ACCESS TRAVEL DISTANCE IN BUILDING EQUIPPED THROUGHOUT WITH AN AUTOMATIC SPRINKLER SYSTEM IN ACCORDANCE WITH SECTION 903.3.1.1 OR 903.3.1.2 (2022 CBC TABLE 1017.2)

1. GROUP A3 - 250 FT
2. GROUP B - 300 FT
3. GROUP S-1 - 250 FT

G. CORRIDORS (2016 CBC SECTION 1020.2)

1. MINIMUM CLEAR WIDTH: 44 INCHES WHEN SERVING 50 OR MORE OCCUPANTS AND 36 INCHES WHEN SERVING LESS THAN 50 OCCUPANTS (2022 CBC TABLE 1020.2)

H. DEAD-END CORRIDORS. WHERE MORE THAN ONE EXIT OR EXIT ACCESS DOORWAY IS REQUIRED, THE EXIT ACCESS SHALL BE ARRANGED SUCH THAT ARE NO DEAD ENDS IN CORRIDORS MORE THAN 20 FEET IN LENGTH (2022 CBC SECTION 1020.4)

1. GROUP A3 - 20 FT
2. GROUP B - 50 FT* *EXCEPTIONS WHERE THE BUILDING IS EQUIPPED THROUGHOUT W/ AN
3. GROUP S-1 - 50 FT* AUTOMATIC SPRINKLER SYSTEM IN ACCORDANCE WITH SECTION 903.3.1.1

I. DOORS USED IN MEANS OF EGRESS (2022 CBC SECTION 1010 AND SECTION 1022)

1. MINIMUM CLEAR WIDTH: 32 INCHES (MEASURED BETWEEN THE FACE OF THE DOOR AND THE STOP, WITH THE DOOR OPEN 90 DEGREES)
2. MAXIMUM WIDTH OF A SWINGING DOOR LEAF: 48 INCHES
3. MINIMUM HEIGHT: 80 INCHES CLEAR
4. DOORS MUST SWING IN THE DIRECTION OF EGRESS TRAVEL WHEN SERVING MORE THAN 50 OCCUPANTS OR WHEN SERVING STORAGE ROOMS CONTAINING HAZARDOUS MATERIALS

J. SPECIAL PURPOSE HORIZONTAL SLIDING EGRESS DOORS (2022 CBC SECTION 1010.1.4.3)

1. THE DOORS SHALL BE POWER OPERATED AND SHALL BE CAPABLE OF BEING OPERATED MANUALLY IN THE EVENT OF POWER FAILURE.
2. THE DOORS SHALL BE OPENABLE BY A SIMPLE METHOD FROM BOTH SIDES WITHOUT SPECIAL KNOWLEDGE OR EFFORT.
3. THE FORCE REQUIRED TO OPERATE THE DOOR SHALL NOT EXCEED 30 POUNDS TO SET THE DOOR IN MOTION AND 15 POUNDS TO CLOSE OR OPEN THE DOOR TO THE MINIMUM REQUIRED WIDTH.
4. THE DOOR SHALL BE OPENABLE WITH A FORCE NOT TO EXCEED 15 POUNDS WHEN A FORCE OF 250 POUNDS IS APPLIED PERPENDICULAR TO THE DOOR ADJACENT TO THE OPENING DEVICE.
5. THE DOOR ASSEMBLY SHALL COMPLY WITH THE APPLICABLE FIRE PROTECTION RATING.
6. THE DOOR ASSEMBLY SHALL HAVE AN INTEGRATED STANDBY POWER SUPPLY.
7. THE DOOR ASSEMBLY POWER SUPPLY SHALL BE ELECTRICALLY SUPERVISED.
8. THE DOOR SHALL OPEN TO THE MINIMUM REQUIRED WIDTH WITHIN 10 SECONDS AFTER ACTIVATION OF THE OPERATING DEVICE.

K. ACCESSIBLE MEANS OF EGRESS REQUIRED (2022 CBC SECTION 1009.1)
ACCESSIBLE MEANS OF EGRESS SHALL COMPLY WITH THIS SECTION. ACCESSIBLE SPACES SHALL BE PEOVIDED WITH NOT LESS THAN ONE ACCESSIBLE MEANS OF EGRESS. WHERE MORE THAN ONE MEANS OF EGRESS ARE REQUIERD BY SECTION 1006.2 AND 1006.3 FROM ANY ACCESSIBLE SPACE, EACH ACCESSIBLE PORTION OF THE SPACE SHALL BE SERVED BY ACCESSIBLE MEANS OF EGRESS IN AT LEAST THE SAME NUMBER AS REQUIRED BY SECTION 1006.2 OR 1006.3. IN ADDITION TO THE REQUIREMENTS OF THIS CHAPTER, MEANS OF EGRESS, WHICH PROVIDE ACCESS TO, OR EGRESS FROM, BUILDINGS FOR PERSONS WITH DISABILITIES, SHALL ALSO COMPLY WITH THE REQUIREMENTS OF CHAPTER 11A (NA) OR 11B AS APPLICABLE.

L. THE BUIDING ENVELOPE MEETS ALL MANDATORY REQUIREMENTS PER 2022 TITLE 24.

ROOFING

A. ROOF COVERING MATERIALS ARE TO BE CLASS A IN ACCORDANCE WITH 2022 CBC SECTION 1505.2

ROOFTOP MOUNTED PHOTOVOLTAIC PANELS

A. 2022 CBC SECTION 3111.1.1, ROOFTOP-MOUNTED PHOTOVOLTAIC PANELS AND MODULES SHOULD COMPLY WITH THE REQUIREMENTS OF 2016 CBC, CHAPTER 15 AND THE CALIFORNIA FIRE CODE.

B. 2022 CBC SECTION 3111.2, ACCESS AND PATHWAYS. ROOF ACCESS, PATHWAYS AND SPACING REQUIREMENTS SHALL BE PROVIDED IN ACCORDANCE WITH SECTIONS 3111.2.1 THROUGH 3111.2.3.3.

C. 2022 CBC SECTION 1505.9, PHOTOVOLTAIC PANELS AND MODULES ROOFTOP MOUNTED PHOTOVOLTAIC PANEL SYSTEMS SHALL BE TESTED, LISTED AND IDENTIFIED WITH A FIRE CLASSIFICATION IN ACCORDANCE WITH UL 1703. THE FIRE CLASSIFICATION SHALL COMPLY WITH 2016 CBC TABLE 1505.1 BASED ON THE TYPE OF CONSTRUCTION OF THE BUILDING. THE BUILDING IS TYPE VB CONSTRUCTION, MINIMUM FIRE CLASSIFICATION CLASS C.

PROJECT DESCRIPTION

THE PROPOSED BEACH CITIES HEALTH DISTRICT (BCHD) ALLCOVE PROJECT WOULD DEVELOP THE EXISTING SITE ADJACENT TO THE BCHD CAMPUS IN THE CITY OF REDONDO BEACH. THE NEW 9,370 SF TWO STORY PREFABRICATED MODULAR BUILDING WILL BE ASSEMBLED ON THE UNDEVELOPED SITE.

THE SITE HAS AN EXISTING CAPPED OIL WELL THAT WILL REMAIN. THE BUILDING MAY HAVE A BELOW SLAB VAPOR BARRIER TO MITIGATE AIRBORNE POLLUTANTS FROM THE CONTAMINATED SOIL. REFER TO OWNERS SOIL MITIGATION MONITORING PLAN.

THE PROJECT INCLUDES SITE WORK, UTILITIES, WALKWAYS, CURBS, GUTTERS, SIGNAGE, LANDSCAPING, IRRIGATION, SITE DRAINAGE, SITE LIGHTING, SURFACE PARKING, COMMUNICATIONS (SECURITY, TELE/DATA).

THE BUILDING WILL BE EQUIPPED WITH AN AUTOMATED FIRE ALARM, FIRE SPRINKLER SYSTEM (DESIGN-BUILD) AND A PHOTOVOLTAIC ROOF TOP SYSTEM (DESIGN-BUILD).

THE PROJECT IS DESIGNED TO MEET LEED GOLD LEVEL OF CERTIFICATION..

ADDRESS:	1200 BERYL STREET, REDONDO BEACH, CA 90277
AIN:	7502-017-902
SITE AREA:	18,855 SF
ALLOWABLE FLOOR AREA RATIO:	9,427.5 SF
PROPOSED BUILDING AREA:	9,370 SF
ALLOWABLE BUILDING HEIGHT:	30'-0"
PROPOSED BUILDING HEIGHT:	28'-6"
STORIES:	2 STORIES
PHOTOVOLTAIC ROOF AREA:	1,200 SF
SKYLIGHT AREA:	96 SF
SKYLIGHT TO ROOF RATIO:	96 SF / 5,029 SF = 2%
SPRINKLERS:	APPROVED AUTOMATIC SPRINKLER SYSTEM IN COMPLIANCE WITH NFPA 13
OCCUPANCY:	GROUP B: OFFICE SPACES
CONSTRUCTION TYPE:	TYPE V-B (PREFABRICATED)

GROUP B (S1) OCCUPANCY PERMITS TWO STORIES PER CBC TABLE 504.4 AND A 36,000 SF BASE ALLOWABLE AREA AREA PER CBC TABLE 506.2. THE BUILDING SHALL BE EQUIPPED THROUGHOUT WITH AN AUTOMATIC SPRINKLER SYSTEM INSTALLED IN ACCORDANCE WITH SECTION 903.3.1.1.

DELEGATED DESIGN / DEFERRED SUBMITTALS APPROVALS BY CITY OF REDONDO BEACH

- SUPERVISED AUTOMATIC FIRE SPRINKLER SYSTEM
- FIRE ALARM SYSTEM AND VOICE ALARM
- REFER TO SPECIFICATIONS FOR ADDITIONAL REQUIREMENTS.

OWNER FURNISHED CONTRACTOR INSTALLED ITEMS

- FURNITURE

APPLICABLE CODES AND STANDARDS

THE DESIGN BUILD TEAM SHALL VERIFY AND COMPLY WITH ALL RELEVANT CODE REQUIREMENTS AND AGENCY APPROVAL REQ.

2022 CALIFORNIA BUILDING STANDARDS CODE, TITLE 24, CALIFORNIA CODE OF REGULATIONS

PART 1	CALIFORNIA BUILDING STANDARDS ADMINISTRATIVE CODE
PART 2	CALIFORNIA BUILDING CODE (CBC), VOLUME 1 AND 2
PART 3	CALIFORNIA ELECTRICAL CODE (CEC)
PART 4	CALIFORNIA MECHANICAL CODE (CMC)
PART 5	CALIFORNIA PLUMBING CODE (CPC)
PART 6	CALIFORNIA ENERGY CODE
PART 9	CALIFORNIA FIRE CODE (CFC)
PART 11	CALIFORNIA GREEN BUILDING STANDARDS CODE
PART 12	CALIFORNIA REFERENCED STANDARDS CODE

NFPA 10 STANDARD FOR PORTABLE FIRE EXTINGUISHERS

NFPA 13 STANDARD FOR INSTALLATION OF SPRINKLER SYSTEMS, 2019 (W/ STATE OF CA AMENDMENTS)

NFPA 14 STANDARD FOR THE INSTALLATION OF STANDPIPE AND HOSE SYSTEMS (2019 EDITION WITH STATE OF CALIFORNIA AMENDMENTS).

NFPA 72 NATIONAL FIRE ALARM CODE, 2022 (WITH STATE OF CALIFORNIA AMENDMENTS)

WHEN NEITHER THE CALIFORNIA BUILDING CODE OR RELEVANT NFPA STANDARDS SPECIFICALLY COVER A SUBJECT RELATING TO BUILDING DESIGN AND CONSTRUCTION, RECOGNIZED FIRE PROTECTION ENGINEERING PRACTICES WILL BE EMPLOYED.

TITLE 19 C.C.R, PUBLIC SAFETY, SFM REGULATIONS

AMERICANS WITH DISABILITIES ACT (ADA) TITLE II

CALIFORNIA HEALTH AND SAFETY CODE

FEDERAL OCCUPATIONAL SAFETY AND HEALTH ACT OF 1970 (OSHA STANDARDS)

SAM MANAGEMENT MEMOS + EXECUTIVE ORDERS

LEADERSHIP IN ENERGY AND ENVIRONMENTAL DESIGN (LEED V.2009)

PAUL MURDOCH ARCHITECTS

6310 SAN VICENTE BLVD. SUITE 400
LOS ANGELES, CA 90048
T. 310 358-0993

THE DRAWINGS AND SPECIFICATIONS AND IDEAS, DESIGNS, AND ARRANGEMENTS REPRESENTED THEREBY ARE AND SHALL REMAIN THE PROPERTY OF THE ARCHITECT AND NO PART THEREOF SHALL BE COPIED, DISCLOSED TO OTHERS, OR USED IN CONNECTION WITH ANY WORK OR PROJECT OTHER THAN THE SPECIFIC PROJECT FOR WHICH THEY HAVE BEEN PREPARED AND DEVELOPED WITHOUT THE WRITTEN CONSENT OF THE ARCHITECT. VISUAL CONTACT WITH THESE DRAWINGS OR SPECIFICATIONS SHALL CONSTITUTE CONCLUSIVE EVIDENCE OF ACCEPTANCE OF THESE RESTRICTIONS. WRITTEN DIMENSIONS ON THESE DRAWINGS SHALL HAVE PRECEDENCE OVER SCALED DIMENSIONS. CONTRACTORS SHALL VERIFY AND BE RESPONSIBLE FOR ALL DIMENSIONS AND CONDITIONS ON THE JOB AND THIS OFFICE MUST BE NOTIFIED OF ANY VARIATIONS FROM THE DIMENSIONS AND CONDITIONS SHOWN BY THESE DRAWINGS. SHOP DETAILS MUST BE SUBMITTED TO THIS OFFICE FOR REVIEW BEFORE PROCEEDING WITH FABRICATION.

NO.	DATE	REVISION

allcove
BEACH CITIES HEALTH DISTRICT

100% PRELIMINARY DESIGN SUBMITTAL

PMA PROJECT NO.
23007

DRAWING TITLE
CODE ANALYSIS

SCALE
N.T.S.

DATE
02/28/2024

DRAWN E.C. CHECKED P.M.

SHEET NO.
G003

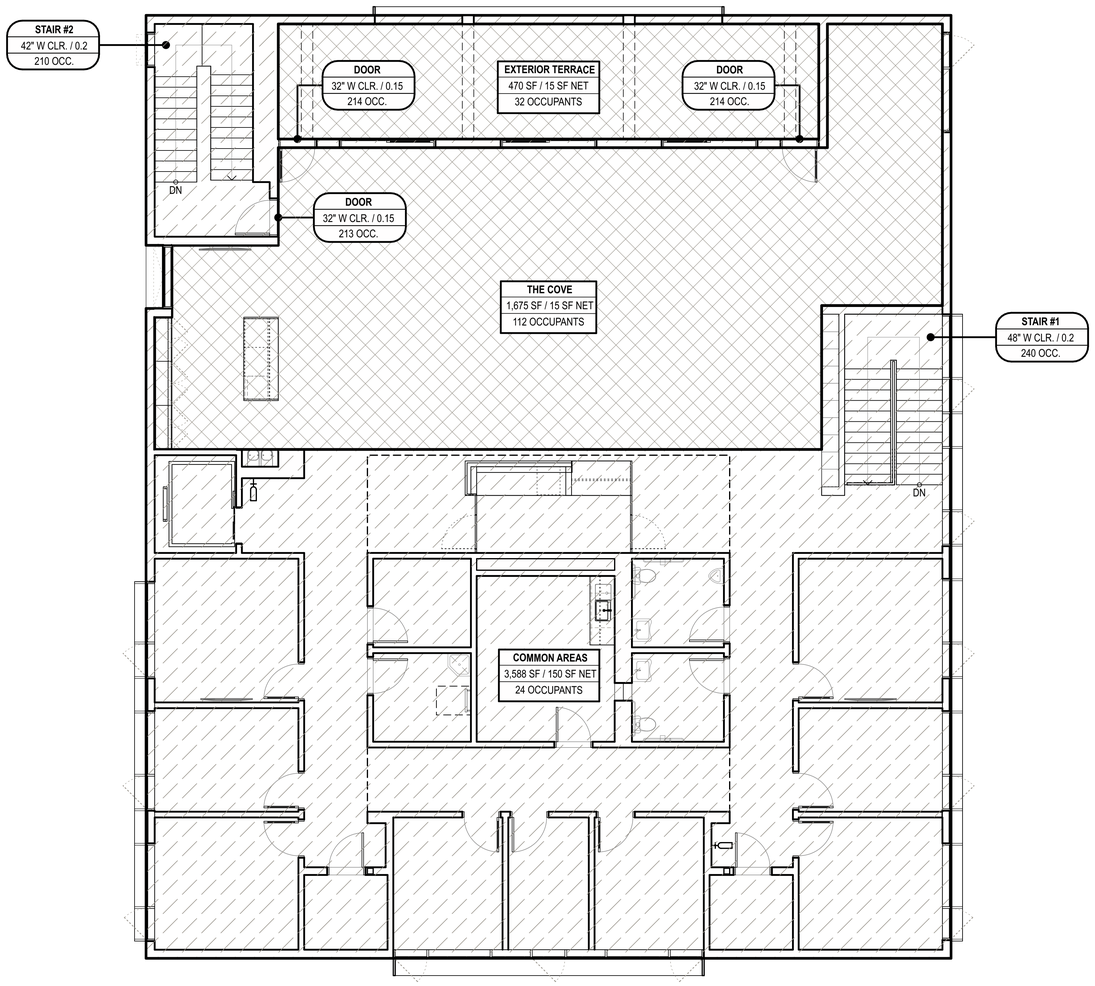

SECOND FLOOR EGRESS OCCUPANCY FLOOR PLAN (2)
SCALE: 3/16" = 1'-0"

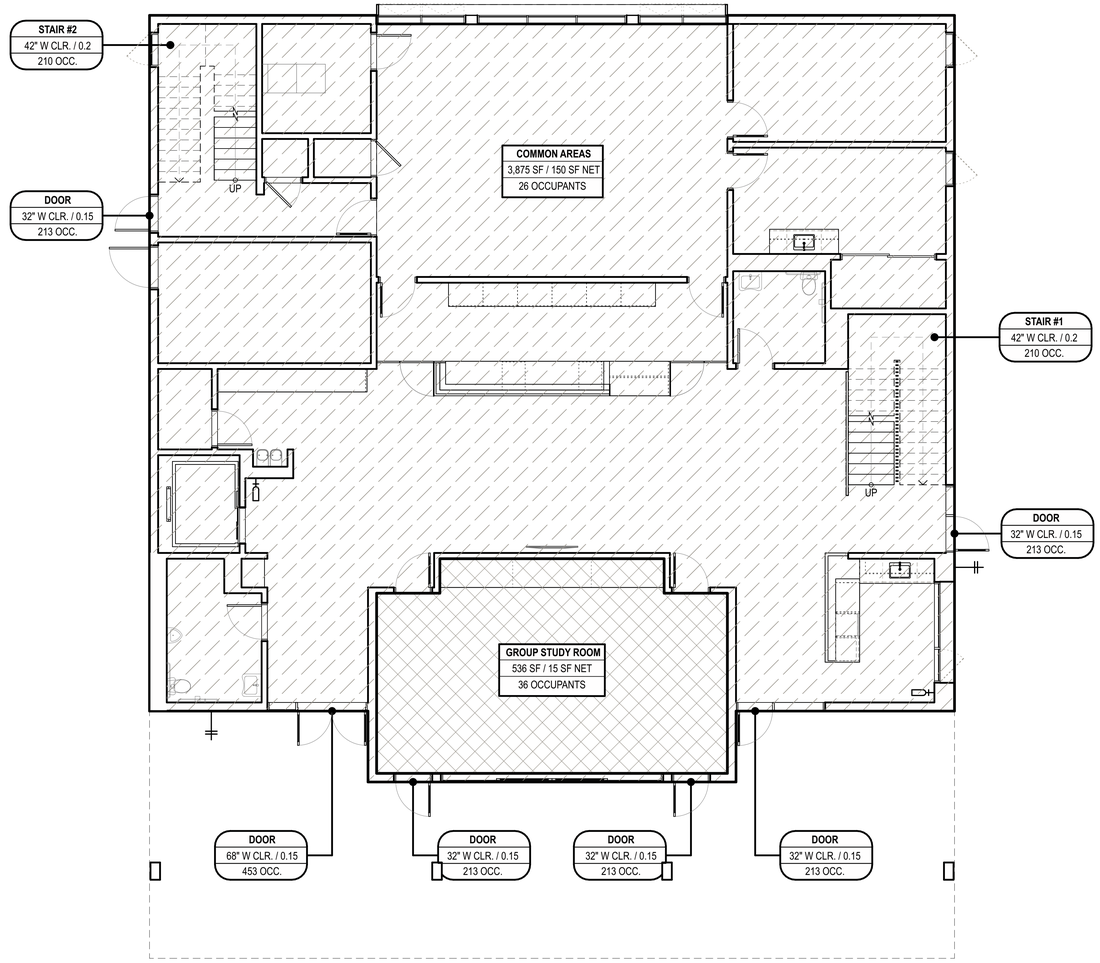

FIRST FLOOR EGRESS OCCUPANCY FLOOR PLAN (1)
SCALE: 3/16" = 1'-0"

SYMBOL LEGEND

BUSINESS AREA
150 GROSS OCCUPANT LOAD FACTOR
PEE CBC TABLE 1004.5

CONCENTRATED BUSINESS USE AREA
15 NET OCCUPANT LOAD FACTOR ASSUMED
PEE CBC 1004.8

XXX
XXX
XX OCC.

ROOM IDENTIFICATION TAG
ROOM NUMBER
AREA / LOAD FACTOR
OCCUPANCY LOAD

XXX
W=XX"
XX OCC.

DOOR IDENTIFICATION TAG
DOOR NUMBER / ID
NET DOOR WIDTH (INCHES) / LOAD FACTOR
MAXIMUM ALLOWABLE OCCUPANCY LOAD

XXX
W=XX"
XX OCC.

STAIR IDENTIFICATION TAG
STAIR NUMBER / ID
NET STAIR WIDTH (INCHES) / LOAD FACTOR
MAXIMUM ALLOWABLE OCCUPANCY LOAD

NSF FLOOR AREA NET SF
GSF FLOOR AREA GROSS SF
(CHAPTER 2 DEFINITION 2022 CBC)

GENERAL NOTES

1. ARCHITECT OF RECORD IS RESPONSIBLE TO VERIFY EGRESS OCCUPANCY CALCULATION AND MEET ALL REQUIREMENTS FOR EXITING PER CBC.
2. REFER TO **E301 + E302** FOR EXIT SIGN LOCATIONS. EXIT SIGNS TO COMPLY W/ **CBC 1013**.
3. MAX. / MIN. AVERAGE ILLUMINATION FOR EXITING IN NORMAL / EMERGENCY CONDITIONS PER **CBC 1008**. REFER TO ELEC. DWGS.
4. MAXIMUM TRAVEL DISTANCE IS 250' PER CBC **2016 TABLE 1017.2**. COMMON PATH OF TRAVEL PER CBC **1006.2.1** AND TABLE **1006.2.1** (75').
5. REFER TO **A111 + A112** FOR FIRE EXTINGUISHER LOCATIONS + TRAVEL DISTANCE.
6. ALL INT. DOORS ARE MIN. 33" CLEAR NET WIDTH U.N.O.
7. EVERY ROOM OR SPACE THAT IS AN CONCENTRATED BUSINESS USE AREA SHALL HAVE THE OCCUPANT LOAD OF THE ROOM OR SPACE POSTED IN A CONSPICUOUS PLACE, NEAR THE MAIN EXIT OR EXIT ACCESS DOORWAY FROM THE ROOM OR SPACE. POSTED SIGNS SHALL BE OF AN APPROVED LEGIBLE PERMANENT DESIGN AND SHALL BE MAINTAINED BY THE CITY OR AUTHORIZED AGENT.
8. REFER TO A101 FOR PATH OF TRAVEL TO THE PUBLIC WAY.

1' 6' 24'

PLAN NORTH
N

PAUL MURDOCH ARCHITECTS

6310 SAN VICENTE BLVD. SUITE 400
LOS ANGELES, CA 90048
T. 310 358-0993

THE DRAWINGS AND SPECIFICATIONS AND IDEAS, DESIGNS, AND ARRANGEMENTS REPRESENTED THEREBY ARE AND SHALL REMAIN THE PROPERTY OF THE ARCHITECT AND NO PART THEREOF SHALL BE COPIED, DISCLOSED TO OTHERS, OR USED IN CONNECTION WITH ANY WORK OR PROJECT OTHER THAN THE SPECIFIC PROJECT FOR WHICH THEY HAVE BEEN PREPARED AND DEVELOPED WITHOUT THE WRITTEN CONSENT OF THE ARCHITECT. VISUAL CONTACT WITH THESE DRAWINGS OR SPECIFICATIONS SHALL CONSTITUTE CONCLUSIVE EVIDENCE OF ACCEPTANCE OF THESE RESTRICTIONS. WRITTEN DIMENSIONS ON THESE DRAWINGS SHALL HAVE PRECEDENCE OVER SCALED DIMENSIONS. CONTRACTORS SHALL VERIFY AND BE RESPONSIBLE FOR ALL DIMENSIONS AND CONDITIONS ON THE JOB AND THIS OFFICE MUST BE NOTIFIED OF ANY VARIATIONS FROM THE DIMENSIONS AND CONDITIONS SHOWN BY THESE DRAWINGS. SHOP DETAILS MUST BE SUBMITTED TO THIS OFFICE FOR REVIEW BEFORE PROCEEDING WITH FABRICATION.

NO. DATE REVISION

allcove
BEACH CITIES HEALTH DISTRICT

100% PRELIMINARY DESIGN SUBMITTAL

PMA PROJECT NO.
23007

DRAWING TITLE
CODE ANALYSIS: EXITING

SCALE
3/16" = 1'-0"

DATE
02/28/2024

DRAWN E.C.
CHECKED P.M.

SHEET NO.
G004

ALLCOVE
BEACH CITIES HEALTH DISTRICT
CIVIL PLANS

CITY OF REDONDO BEACH DEPARTMENT OF ENGINEERING & BUILDING SERVICES GENERAL ENGINEERING NOTES

A. MYLAR COPY OF THE RECORDED TRACT MAP/PARCEL MAP SHALL BE SUBMITTED TO THE CITY ENGINEER, PRIOR TO REQUESTING FINAL BUILDING INSPECTION.

B. RECORDED COPY OF THE REQUIRED COVENANT/EASEMENT/DEED/DEED RESTRICTION SHALL BE SUBMITTED TO THE CITY ENGINEER, PRIOR TO REQUESTING FINAL BUILDING INSPECTION.

C. ALL EASEMENTS, OIL WELLS, SUBSTRUCTURES, SUPERSTRUCTURES, LANDSCAPE, HARDSCAPE, UTILITY POLES, UTILITY BOXES, UTILITY VENTS, UTILITY VAULTS, UTILITY CABINETS, UTILITY OVERHEAD LINES AND WATER HYDRANTS ARE SHOWN ON THIS SITE PLAN.

D. CONTRACTOR, AT ITS SOLE COST, SHALL ENSURE THAT PERMITTED WORK WILL NOT CREATE POTENTIAL FLOODING OF NEIGHBORING IMPROVEMENTS, NOR WILL IT ALTER THE EXISTING COURSE OF WATER FLOW.

E. CONTRACTOR SHALL NOTIFY CITY ENGINEERING DIVISION 48 HOURS PRIOR TO COMMENCING ANY WORK IN PUBLIC RIGHT OF WAY.

F. WORK IN PUBLIC RIGHT OF WAY, SHALL COMPLY WITH THE LATEST EDITION OF APWA STANDARD PLANS AND SPECIFICATIONS, AND SHALL BE EXECUTED TO THE SATISFACTION OF CITY ENGINEER AND/OR HIS REPRESENTATIVE.

G. WORK IN PUBLIC RIGHT OF WAY SHALL BE PERFORMED BY LICENSED CONTRACTORS. CONTRACTORS AND SUBCONTRACTORS SHALL POSSESS VALID REDONDO BEACH BUSINESS LICENSES.

H. CONTRACTOR SHALL MAINTAIN CONSTRUCTION PERMITS AND AN APPROVED SET OF PLANS ON SITE AT ALL TIME. CONTRACTOR SHALL SURRENDER ALL REQUIRED CONSTRUCTION DOCUMENTS TO THE CITY ENGINEER AND/OR HIS REPRESENTATIVE UPON DEMAND.

I. PRIOR TO ISSUANCE OF THE BUILDING/ENGINEERING PERMIT, CONTRACTOR MUST PROVIDE PROOF OF INSURANCE. CONTRACTOR SHALL MAINTAIN ON CITY FILES APPROVED ONE MILLION DOLLAR GENERAL LIABILITY NAMING THE CITY ADDITIONAL INSURED, WITH 30-DAY CANCELLATION NOTICE. THE INSURANCE POLICY SHALL STATE "THE CITY OF REDONDO BEACH, ITS OFFICERS, ELECTED OFFICIALS, ATTORNEYS, EMPLOYEES, MEMBERS OF BOARDS AND COMMISSIONS, AGENTS AND VOLUNTEERS ARE HEREBY NAMED ADDITIONAL INSURED." THE CERTIFICATE OF INSURANCE MUST STATE THAT THE INSURANCE IS "PRIMARY" AND NOT EXCESS. THE CANCELLATION CLAUSE SHALL STATE "SHOULD ANY OF THE ABOVE DESCRIBED POLICIES BE CANCELED BEFORE THE EXPIRATION DATE THEREOF, THE ISSUING COMPANY WILL MAIL 30 DAYS WRITTEN NOTICE TO THE CERTIFICATE HOLDER NAMED TO THE LEFT.'

J. CONTRACTOR SHALL REPLACE AT ITS SOLE COST, DAMAGED SIDEWALK, DRIVEWAYS, CURB, GUTTER AND PAVEMENT TO THE SATISFACTION OF THE CITY ENGINEER AND/OR HIS REPRESENTATIVE.

K. CONSTRUCT NEW COMMERCIAL CONCRETE DRIVEWAY TYPE _____ WHERE NOTED ON SITE PLAN. NEW CONCRETE SHALL BE CLASS 520-C-2500.

L. CONSTRUCT NEW CONCRETE SIDEWALK WHERE NOTED ON SITE PLAN. NEW SIDEWALK SHALL MATCH EXISTING. NEW CONCRETE SHALL BE CLASS 520-C-2500.

M. CONSTRUCT NEW CONCRETE CURB AND GUTTER WHERE NOTED ON SITE PLAN. NEW CURB SHALL HAVE FACE HEIGHT OF 6 INCHES OR MATCH EXISTING. NEW GUTTER SHALL BE 12 INCHES WIDE OR MATCH EXISTING. NEW CONCRETE SHALL BE CLASS 520-C-2500.

N. CONSTRUCT NEW FULL-DEPTH ASPHALT CONCRETE PAVEMENT WHERE NOTED ON SITE PLAN. NEW ASPHALTIC CONCRETE SHALL BE CLASS D1-PG-64-10.

O. CONSTRUCT NEW CONCRETE CURB RAMP WITH ADJACENT 3-FOOT MINIMUM ASPHALTIC CONCRETE PAVEMENT, WHERE NOTED ON SITE PLAN. NEW CONCRETE SHALL BE CLASS 520-C-2500. NEW ASPHALTIC CONCRETE SHALL BE CLASS D1-PG-64-10.

P. NEW SEWER LATERAL SHALL BE CONNECTED TO MAIN SEWER LINE WITHIN PROPERTY FRONTAGE. SEWER LATERAL SHALL BE PERPENDICULAR TO MAIN SEWER LINE. MINIMUM SEWER LATERAL DIAMETER SHALL BE 4-INCH. NO CONNECTION TO EXISTING SEWER IS ALLOWED UNLESS THE EXISTING SEWER MEETS THE CURRENT CODE REQUIREMENTS AND THE APPROVAL OF THE BUILDING DIVISION. QUALITY/QUANTITY OF SEWAGE CONSTITUENTS SHALL COMPLY WITH THE REQUIREMENTS OF THE LATEST EDITION OF THE WASTEWATER ORDINANCE OF THE SANITATION DISTRICTS OF LOS ANGELES COUNTY. PROVIDE 6-INCH CLEAN-OUT IMMEDIATELY BEHIND SIDEWALK. ENCASE CLEAN-OUT IN CONCRETE BOX MARKED "S" OR "SEWER". DESIGN SHALL BE PERFORMED BY A REGISTERED CIVIL ENGINEER.

Q. NEW PUBLIC OR QUASI-PUBLIC UTILITY FACILITIES SHALL BE LOCATED IN PUBLIC PARKWAY (THE LANDSCAPED AREAS BETWEEN THE CURB AND THE SIDEWALK OR THE CITY'S RIGHT OF WAY LINE), OUTSIDE OF CURB RAMPS, DRIVEWAYS AND SIDEWALK, UNLESS OTHERWISE NOTED ON SITE PLAN.

R. TRAFFIC DELINEATION SHALL BE EXECUTED IN ACCORDANCE WITH THE LATEST EDITION OF THE CALIFORNIA MANUAL ON UNIFORM TRAFFIC CONTROL DEVICES (CA-MUTCD) AND TO THE SATISFACTION OF THE CITY ENGINEER AND/OR HIS REPRESENTATIVE.

S. COMMERCIAL VEHICLES TRANSPORTING SOIL, EQUIPMENT OR CONSTRUCTION MATERIALS, AND HAVING UNLADEN WEIGHT AS DEFINED IN SECTION 660 OF CVC OF 6,000 POUNDS OR MORE OR HAVING MANUFACTURER'S GROSS WEIGHT RATING AS DEFINED IN SECTION 390 OF CVC OF 10,000 POUNDS OR MORE SHALL USE DESIGNATED TRUCK ROUTE TO COMMUTE TO PROJECT SITE. ANY COMMERCIAL VEHICLE HAVING A FULLY LADEN WEIGHT OF 20,000 POUNDS OR MORE SHALL NOT USE CONDITIONAL TRUCK ROUTE.

T. PUBLIC WORKS INSPECTOR SHALL INSPECT ALL STREET IMPROVEMENTS; ALL SEWER SYSTEMS INCLUDING ALL PIPING, TRENCHING, BACKFILLING AND SEWER EJECTOR; ALL STORM DRAIN SYSTEMS INCLUDING ALL PIPING, TRENCHING, BACKFILLING, CATCH BASINS, SUMP PUMPS AND OIL/WATER SEPARATOR. FIRST INSPECTION SHALL TAKE PLACE AFTER FORMS ARE IN PLACE FOR SIDEWALKS, DRIVEWAYS, ETC. OR AT THE TIME OF CONSTRUCTING THE SEWER LINE SADDLE. SECOND INSPECTION SHALL TAKE PLACE WHILE SIDEWALKS, DRIVEWAYS, ETC., ARE BEING POURED AND FINISHED OR AT THE TIME OF BACKFILLING. BACKFILLING, COMPACTION AND TESTING SHALL BE CONDUCTED IN ACCORDANCE WITH CITY STANDARDS AND TO THE SATISFACTION OF THE CITY ENGINEER AND/OR HIS REPRESENTATIVE. FINAL INSPECTION WILL BE MADE AFTER CITY BUILDING DIVISION HAS MADE THEIR FINAL INSPECTION. AT THAT TIME, IF ALL WORK PERTAINING TO PUBLIC RIGHT OF WAY IS IN GOOD ORDER, THE PERMIT DEPOSITS WILL BE RELEASED, LESS ANY AND ALL CHARGES.

U. CONTRACTOR SHALL ARRANGE FOR PUBLIC WORKS INSPECTION 24 HOURS IN ADVANCE. CONTRACTOR SHALL CONTACT THE ENGINEERING SERVICES DIVISION AT (310) 937-6653 BEFORE 3:00 P.M. FOR ALL INSPECTION REQUESTS. CALLS RECEIVED AFTER 3:00 P.M. SHALL NOT BE SCHEDULED FOR NEXT BUSINESS DAY INSPECTION.

V. CONTRACTOR SHALL SUBMIT COMPACTION REPORTS AND CONCRETE/ASPHALT CLASS CERTIFICATES TO THE ENGINEERING SERVICES DIVISION PRIOR TO REQUESTING FINAL INSPECTION.

W. DUST CONTROL SHALL BE ENFORCED TO THE SATISFACTION OF THE CITY ENGINEER AND/OR HIS REPRESENTATIVE THROUGHOUT CONSTRUCTION.

X. NOISE CONTROL SHALL BE ENFORCED TO THE SATISFACTION OF THE CITY ENGINEER AND/OR HIS REPRESENTATIVE THROUGHOUT CONSTRUCTION. ACTUAL CONSTRUCTION ACTIVITIES IN PUBLIC RIGHT OF WAY MAY OCCUR FROM 7:00 A.M. TO 6:00 P.M., MONDAY THROUGH FRIDAY. NO WORK IN PUBLIC RIGHT OF WAY SHALL OCCUR ON SATURDAYS WITHOUT PRIOR AUTHORIZATION FROM THE CITY ENGINEER AND/OR HIS REPRESENTATIVE. AUTHORIZED WORK ON SATURDAYS SHALL OCCUR FROM 9:00 A.M. TO 5:00 P.M. NO WORK IN PUBLIC RIGHT OF WAY SHALL OCCUR ON SUNDAYS OR NATIONAL HOLIDAYS.

Y. PUBLIC RIGHT OF WAY SHALL BE KEPT CLEAR AND CLEAN TO THE SATISFACTION OF THE CITY ENGINEER AND/OR HIS REPRESENTATIVE THROUGHOUT CONSTRUCTION. NO STORAGE OF DEBRIS, MATERIALS OR EQUIPMENT SHALL BE ALLOWED ON PUBLIC RIGHT OF WAY WITHOUT PRIOR WRITTEN CONSENT FROM THE CITY ENGINEER AND/OR HIS REPRESENTATIVE. SUCH CONSENT SHALL BE RENEWED DAILY. IF CITY CREWS ARE CALLED UPON TO PERFORM WORK OF CONTRACTOR, REGARDING CITY RIGHT OF WAY, CONTRACTOR SHALL BE CHARGED FOR ALL EXPENSES INCURRED BY CITY CREWS.

Z. CONTRACTOR SHALL LOCATE AND PROTECT IN PLACE EXISTING UTILITIES AT ITS SOLE COST. CONTRACTOR SHALL REPAIR, AT ITS COST AND TO THE SATISFACTION OF THE CITY ENGINEER, HIS REPRESENTATIVE AND/OR TO THE UTILITY COMPANIES, ANY DAMAGE INFLICTED BY CONTRACTOR ON EXISTING UTILITIES.

AA. CONTRACTOR SHALL LOCATE AND PROTECT IN PLACE EXISTING SURVEY POINTS AT ITS SOLE COST. CONTRACTOR SHALL RE-ESTABLISH DAMAGED SURVEY POINTS, AT ITS SOLE COST, AND TO THE SATISFACTION OF THE CITY ENGINEER AND/OR HIS REPRESENTATIVE.

BB. CONTRACTOR SHALL REPLACE AT ITS SOLE COST, REMOVED/DAMAGED TREES/LANDSCAPING WITHIN PUBLIC RIGHT OF WAY, TO THE SATISFACTION OF THE CITY ENGINEER AND/OR HIS REPRESENTATIVE.

GENERAL NOTES

1. ALL NEW CONSTRUCTION SHALL COMPLY WITH THE CONTRACT DOCUMENTS AND LATEST EDITIONS OF THE CALIFORNIA BUILDING CODE, "STANDARD SPECIFICATIONS FOR PUBLIC WORKS CONSTRUCTION", AND CITY OF REDONDO BEACH LOCAL ORDINANCES AS APPLICABLE.
2. ALL GRADING WORK SHALL BE PERFORMED IN ACCORDANCE WITH THE REQUIREMENTS AND RECOMMENDATIONS CONTAINED IN THE GEOTECHNICAL INVESTIGATION "SUPPLEMENTAL GEOTECHNICAL STUDY REPORT, HEALTHY LIVING CAMPUS PROJECT" DATED MAY 27, 2022 BY CONVERSE CONSULTANTS.
3. THE CONTRACTOR SHALL ASSUME SOLE AND COMPLETE RESPONSIBILITY FOR THE JOB SITE CONDITIONS, INCLUDING SAFETY OF ALL PERSONS AND PROPERTY, DURING THE COURSE OF CONSTRUCTION OF THIS PROJECT. THIS REQUIREMENT SHALL APPLY CONTINUOUSLY, AND SHALL NOT BE LIMITED TO NORMAL WORKING HOURS.
4. PRIOR TO COMMENCING CONSTRUCTION, THE CONTRACTOR SHALL VERIFY ALL JOIN CONDITIONS FOR GRADING, DRAINAGE AND UNDERGROUND FACILITIES INCLUDING LOCATION AND ELEVATION OF EXISTING UNDERGROUND FACILITIES AT CROSSINGS WITH PROPOSED UNDERGROUND FACILITIES. IF CONDITIONS DIFFER FROM THOSE SHOWN ON THE PLANS, THE CONTRACTOR SHALL NOTIFY THE ENGINEER AND SHALL NOT BEGIN CONSTRUCTION UNTIL THE CHANGED CONDITIONS HAVE BEEN EVALUATED.
5. ALL DRAWINGS ARE CONSIDERED TO BE A PART OF THE CONTRACT DOCUMENTS. THE CONTRACTOR SHALL BE RESPONSIBLE FOR THE REVIEW AND COORDINATION OF ALL DRAWINGS AND SPECIFICATIONS PRIOR TO THE START OF CONSTRUCTION. ANY DISCREPANCIES THAT OCCUR SHALL BE BROUGHT TO THE ATTENTION OF THE ARCHITECT PRIOR TO THE START OF CONSTRUCTION SO THAT A CLARIFICATION CAN BE ISSUED. ANY WORK PERFORMED IN CONFLICT WITH THE CONTRACT DOCUMENTS OR ANY CODE REQUIREMENTS SHALL BE CORRECTED BY THE CONTRACTOR AT THEIR OWN EXPENSE AND AT NO EXPENSE TO THE OWNER OR ARCHITECT.
6. THE ENGINEER PREPARING THESE PLANS WILL NOT BE RESPONSIBLE FOR, OR LIABLE FOR, UNAUTHORIZED CHANGES TO OR USES OF THESE PLANS. ALL CHANGES TO THE PLANS MUST BE IN WRITING AND MUST BE APPROVED BY THE PREPARER OF THESE PLANS.
7. NOTES AND DETAILS ON DRAWINGS SHALL TAKE PRECEDENCE OVER GENERAL NOTES AND TYPICAL DETAILS. WHERE NO DETAILS ARE GIVEN, CONSTRUCTION SHALL BE AS SHOWN FOR SIMILAR WORK.
8. THE EXISTENCE, LOCATION AND CHARACTERISTICS OF UNDERGROUND UTILITY INFORMATION SHOWN ON THESE PLANS HAVE BEEN OBTAINED FROM A REVIEW OF AVAILABLE RECORD DATA. NO REPRESENTATION IS MADE AS TO THE ACCURACY OR COMPLETENESS OF SAID UTILITY INFORMATION. THE CONTRACTOR SHALL TAKE PRECAUTIONARY MEASURES TO PROTECT THE UTILITY LINES SHOWN AND ANY OTHER LINES NOT OF RECORD OR NOT SHOWN ON THESE PLANS.
9. IF AT ANY TIME DURING GRADING OPERATIONS, ANY UNFAVORABLE GEOLOGICAL CONDITIONS ARE ENCOUNTERED, GRADING IN THAT AREA WILL STOP UNTIL APPROVED CORRECTIVE MEASURES ARE OBTAINED.
10. THE PROPOSED GRADE IS THE FINAL GRADE AND NOT THE ROUGH GRADE. THE CONTRACTOR SHALL SUBTRACT THE THICKNESS OF THE PAVED SECTION AND/OR LANDSCAPE TOPSOIL SECTION TO ARRIVE AT THE ROUGH GRADE ELEVATION.
11. STRAIGHT GRADE SHALL BE MAINTAINED BETWEEN CONTOUR LINES AND SPOT ELEVATIONS UNLESS OTHERWISE SHOWN ON THE PLANS.
12. ALL DEBRIS AND FOREIGN MATERIAL SHALL BE REMOVED FROM THE SITE AND DISPOSED OF AT APPROVED DISPOSAL SITES. THE CONTRACTOR SHALL OBTAIN NECESSARY PERMITS FOR THE TRANSPORTATION OF MATERIAL TO AND FROM THE SITE.
13. ALL FILL SOILS OR SOILS DISTURBED OR OVEREXCAVATED DURING CONSTRUCTION SHALL BE COMPACTED PER THE REQUIREMENTS OF THE SOILS REPORT BUT NOT LESS THAN 90% MAXIMUM DENSITY AS DETERMINED BY A.S.T.M. SOIL COMPACTION TEST D-1557.
14. THE CONTRACTOR SHALL OBTAIN AN O.S.H.A. PERMIT FROM THE CALIFORNIA DIVISION OF INDUSTRIAL SAFETY PRIOR TO THE CONSTRUCTION OF TRENCHES OR EXCAVATIONS WHICH ARE FIVE FEET OR DEEPER.
15. DIMENSIONS TO PIPELINES ARE TO CENTERLINE UNLESS OTHERWISE NOTED.
16. ALL WATER LINES SHALL BE INSTALLED WITH 36" MINIMUM COVER FROM TOP OF PIPE TO FINISHED GRADE, UNLESS OTHERWISE NOTED.
17. THRUST BLOCKS SHALL BE INSTALLED AT WATERLINE HORIZONTAL AND VERTICAL BENDS, TEES, CAPPED ENDS AND REDUCERS ACCORDING TO THE DETAILS PROVIDED ON THESE PLANS.
18. CONSTRUCTION STAKING FOR IMPROVEMENTS SHOWN ON THESE PLANS SHALL BE PERFORMED BY A LICENSED LAND SURVEYOR. CONSTRUCTION STAKING SURVEYOR SHALL BE RESPONSIBLE FOR COORDINATION OF THESE PLANS WITH SOURCE DRAWINGS PREPARED BY ARCHITECT, LANDSCAPE ARCHITECT, STRUCTURAL ENGINEER, MEP CONSULTANT AND ANY OTHER DISCIPLINE PRIOR TO START OF STAKING AND CONSTRUCTION. ANY DISCREPANCIES THAT OCCUR SHALL BE BROUGHT TO THE ATTENTION OF THE OWNER'S PROJECT MANAGER PRIOR TO THE START OF CONSTRUCTION SO THAT A CLARIFICATION CAN BE ISSUED.
19. THE CONTRACTOR SHALL REPLACE ALL EXISTING IMPROVEMENTS DAMAGED DURING CONSTRUCTION TO MATCH EXISTING, INCLUDING PERMANENT TRENCH RESURFACING.
20. CONTRACTOR TO CONTACT UNDERGROUND SERVICE ALERT (800-227-2600) PRIOR TO EXCAVATION.
21. ALL DIMENSIONS ARE IN FEET OR DECIMALS THEREOF.
22. ALL CURB DIMENSIONS AND RADII ARE TO PAVEMENT FACE OF CURB.
23. CONTRACTOR TO BE AWARE OF ALL OVERHEAD LINES AT ALL TIMES, SO AS NOT TO DISTURB THEM.
24. WATER SHALL BE PROVIDED ONSITE AND USED TO CONTROL DUST DURING CONSTRUCTION OPERATIONS.
25. CONTRACTOR SHALL OBTAIN ANY NECESSARY PERMITS FROM THE CITY OF REDONDO BEACH FOR ALL WORK WITHIN THE PUBLIC RIGHT-OF-WAY.
26. STORM DRAINAGE SYSTEMS SHOWN ON THESE PLANS HAVE BEEN DESIGNED FOR THE FINAL SITE CONDITION AT COMPLETION OF THE PROJECT. THE CONTRACTOR IS RESPONSIBLE FOR MAINTAINING ADEQUATE DRAINAGE OF THE SITE, DURING INTERIM CONDITIONS OF CONSTRUCTION.
27. CONTRACTOR SHALL OBTAIN ALL REQUIRED PERMITS, INCLUDING NPDES, FROM THE APPROPRIATE JURISDICTIONAL AGENCIES FOR DISCHARGE OF GROUNDWATER THAT MAY BE NECESSARY TO ACCOMPLISH EXCAVATIONS SHOWN ON THESE PLANS.
28. REFER TO DIVISION 1 PROJECT MANUAL FOR ADDITIONAL REQUIREMENTS.

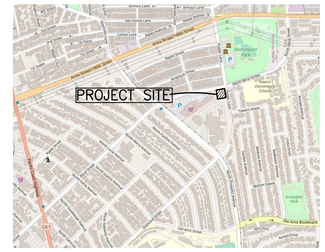

VICINITY MAP
NOT TO SCALE

LEGAL DESCRIPTIONS

THE LAND REFERRED TO HEREIN BELOW IS SITUATED IN THE CITY OF REDONDO BEACH, IN THE COUNTY OF LOS ANGELES, STATE OF CALIFORNIA, AND IS DESCRIBED AS FOLLOWS:

SITE ADDRESS:
514 N. PROSPECT AVE.
REDONDO BEACH, CA 90277

PARCEL 2
P.M. NO. 13030
P.M.B. 144-3
APN 7502-017-902

FLOOD ZONE

FLOOD ZONE X

ESTIMATED EARTHWORK QUANTITIES

CUT:	**1,842** CUBIC YARDS
FILL:	**85** CUBIC YARDS
NET (FILL/IMPORT):	**1,757** CUBIC YARDS
REMOVAL AND RECOMPACTION	**1,097** CUBIC YARDS

EARTHWORK CALCULATION NOTES:

1. THE ESTIMATED QUANTITIES PROVIDED ABOVE ARE TO BE USED FOR JURISDICTIONAL PLAN CHECKING AND PERMITTING PURPOSES ONLY.
2. ESTIMATED EARTHWORK ABOVE IS BASED ON DESIGN FINISH GRADES TO EXISTING GRADES AND/OR CONTOURS AS PROVIDED ON THE BASE SURVEY. THE ESTIMATED EARTHWORK DOES NOT ACCOUNT FOR THE THICKNESS OF PAVEMENTS, FOUNDATIONS AND SLABS ON GRADE, FOOTINGS, CLEARING AND GRUBBING, OVER EXCAVATION AND RECOMPACTION, AND CONSTRUCTION MEANS AND METHODS.
3. THE ESTIMATED EARTHWORK QUANTITIES DO NOT INCLUDE SHRINKAGE AND/OR EXPANSION FACTORS DUE TO COMPACTION OR OVER EXCAVATION QUANTITIES.
4. THE CONTRACTOR SHALL CALCULATE HIS OWN EARTHWORK QUANTITIES NECESSARY FOR HIS BID AND WORK.
5. ESTIMATED EARTHWORK QUANTITIES ABOVE ASSUME THAT ALL ONSITE MATERIALS ARE SUITABLE FOR BACKFILLING. HOWEVER, ACTUAL EXISTING ONSITE MATERIALS AND IMPORTED MATERIALS MUST FIRST BE APPROVED BY THE GEOTECHNICAL ENGINEER PRIOR TO INSTALLATION, REMOVAL, REPLACEMENT.

LEGEND

SITE

- CURB/BACK OF CURB/GUTTER
- RETAINING WALL/SITE WALL
- PROPERTY LINE/RIGHT OF WAY
- CENTER LINE
- FENCE

EROSION CONTROL

- GRAVEL DBAGS
- FIBER ROLL
- PROPOSED BUILDING EXCAVATION OUTLINE
- EXISTING DRAINAGE DIRECTION OF FLOW

GRADING

- 100 — PROPOSED MAJOR CONTOUR
- 102 — PROPOSED MINOR CONTOUR
- FLOW LINE
- GB — GRADE BREAK LINE
- R — RIDGE LINE
- EARTHEN SWALE
- SAWCUT
- LIMITS OF GRADING
- GRADING BENCH
- TOP / TOE — GRADED SLOPE (HORIZONTAL:VERTICAL)
- 4" SD — STORM DRAIN
- STORM DRAIN INLET

ABBREVIATIONS

AC	ASPHALTIC CONCRETE	MH	MANHOLE
BCR	BEGIN CURVE RETURN	(N)	NORTH
BW	BACK OF WALK	NTS	NOT TO SCALE
BLDG	BUILDING	PA	PLANTER AREA
BM	BENCH MARK	POC	POINT OF CONNECTION
BOS	BOTTOM OF STAIRS	PIV	POST INDICATOR VALVE
BMP	BEST MANAGEMENT PRACTICES	PCC	POINT OF COMPOUND CURVE
C&G	CURB AND GUTTER	PRC	POINT OF REVERSE CURVE
CB	CATCH BASIN	PRV	PRESSURE REDUCING VALVE
CI	CAST IRON	PVC	POLYVINYL CHLORIDE
CL	CENTER LINE	R	RADIUS
CMU	CONCRETE MASONRY UNIT	RCIP	RECTANGULAR CAST IRON PIPE
CO	CLEANOUT	RD	ROOF DRAIN
CONC	PORTLAND CEMENT CONCRETE	RW	RIGHT-OF-WAY
CF	CURB FACE	(S)	SOUTH
DW	DOMESTIC WATER	S=	SLOPE EQUALS
(E)	EAST	SD	STORM DRAIN
ECR	END CURVE RETURN	SL	STREET LIGHT
EG	EDGE OF GUTTER	SSMH	SANITARY SEWER MANHOLE
EL. OR ELEV	ELEVATION	SS	SANITARY SEWER
ELEC	ELECTRIC, ELECTRICAL	STD	STANDARD
EM	ELECTRICAL METER	SDMH	STORM DRAIN MANHOLE
EX. OR EXIST.	EXISTING	TC	TOP OF CURB
FDC	FIRE DEPARTMENT CONNECTION	TEL	TELEPHONE
FF	FINISHED FLOOR	TG	TOP OF GRATE
FG	FINISHED GRADE (LANDSCAPE)	TOS	TOP OF STAIRS
FS	FINISHED SURFACE (HARDSCAPE)	TW	TOP OF WALL
FH	FIRE HYDRANT	TS	TRAFFIC SIGNAL
FL	FLOW LINE	TSB	TRAFFIC SIGNAL BOX
FT	FOOT OR FEET	TYP	TYPICAL
FU	FIXTURE UNITS	TV	TELEVISION
FW	FIRE WATER	VIF	VERIFY IN FIELD
GPM	GALLONS PER MINUTE	VLT	VAULT
GV	GATE VALVE	VCP	VITRIFIED CLAY PIPE
HDPE	HIGH DENSITY POLYETHYLENE	(N)	WEST
HP	HIGH POINT	W	WATER
INV.	INVERT	WM	WATER METER
LP	LOW POINT	WV	WATER VALVE
MAX	MAXIMUM		
MIN	MINIMUM		

PROJECT DIRECTORY

ARCHITECT:
PAUL MURDOCH ARCHITECTS
6310 SAN VICENTE BLVD
SUITE 400
LOS ANGELES, CA 90048
CONTACT: PAUL MURDOCH
TEL: 310.358.0993, EXT. 1

CIVIL ENGINEER:
LABIB FUNK + ASSOCIATES
319 MAIN STREET
EL SEGUNDO, CA 90245
CONTACT: FRANK LAROCCA
TEL: 213.239.9700, EXT. 150

GEOTECHNICAL ENGINEER:
CONVERSE CONSULTANTS
717 SOUTH MYRTLE AVE
MONROVIA, CA 91016
TEL: 626.930.1200

GEOTECHNICAL ENGINEER'S STATEMENT

THIS PLAN HAS BEEN REVIEWED AND CONFORMS TO RECOMMENDATIONS OF SOILS ENGINEERING/GEOLOGIC REPORT DATED MAY 27, 2022 BY CONVERSE CONSULTANTS.

SIGNATURE DATE STAMP

SHEET INDEX

C000	TITLE SHEET
C100	DEMOLITION AND EROSION CONTROL PLAN
C200	ROUGH GRADING PLAN
C201	ROUGH GRADING SECTIONS
C210	GRADING AND DRAINAGE PLAN
C300	LOW IMPACT DEVELOPMENT PLAN
C400	UTILITY PLAN

1-800-227-2600
CALL USA/SC FOR UNDERGROUND LOCATING 48 HOURS BEFORE YOU DIG!

IMPORTANT NOTICE
SECTION 4216/4217 OF THE GOVERNMENT CODE REQUIRES A DIGALERT IDENTIFICATION NUMBER BE ISSUED BEFORE A "PERMIT TO EXCAVATE" WILL BE VALID. FOR YOUR DIGALERT I.D. NUMBER CALL UNDERGROUND SERVICE ALERT TOLL FREE 1-800-227-2600 TWO WORKING DAYS BEFORE YOU DIG

PAUL MURDOCH ARCHITECTS
6310 SAN VICENTE BLVD. SUITE 400
LOS ANGELES, CA 90048
T. 310 358-0993

THE DRAWINGS AND SPECIFICATIONS AND IDEAS, DESIGNS, AND ARRANGEMENTS REPRESENTED THEREBY ARE AND SHALL REMAIN THE PROPERTY OF THE ARCHITECT, AND NO PART THEREOF SHALL BE COPIED, DISCLOSED TO OTHERS, OR USED IN CONNECTION WITH ANY WORK OR PROJECT OTHER THAN THE SPECIFIC PROJECT FOR WHICH THEY HAVE BEEN PREPARED AND DEVELOPED WITHOUT THE WRITTEN CONSENT OF THE ARCHITECT. VISUAL CONTACT WITH THESE DRAWINGS OR SPECIFICATIONS SHALL CONSTITUTE CONCLUSIVE EVIDENCE OF ACCEPTANCE OF THESE RESTRICTIONS. WRITTEN DIMENSIONS ON THESE DRAWINGS SHALL HAVE PRECEDENCE OVER SCALED DIMENSIONS. CONTRACTORS SHALL VERIFY AND BE RESPONSIBLE FOR ALL DIMENSIONS AND CONDITIONS ON THE JOB AND THIS OFFICE MUST BE NOTIFIED OF ANY VARIATIONS FROM THE DIMENSIONS AND CONDITIONS SHOWN BY THESE DRAWINGS. SHOP DETAILS MUST BE SUBMITTED TO THIS OFFICE FOR REVIEW BEFORE PROCEEDING WITH FABRICATION.

Labib Funk + Associates
Structural | Shoring | Civil | EBM
319 Main Street
El Segundo, California 90245
t: 213/ 239 9700
LFA Job No. 23798

NO.	DATE	REVISION

allcove
BEACH CITIES HEALTH DISTRICT

100% PRELIMINARY DESIGN SUBMITTAL

PMA PROJECT NO.
23007

DRAWING TITLE
TITLE SHEET

SCALE
PER PLAN

DATE
02/28/2024

DRAWN I.S. CHECKED F.L.

SHEET NO.
C000

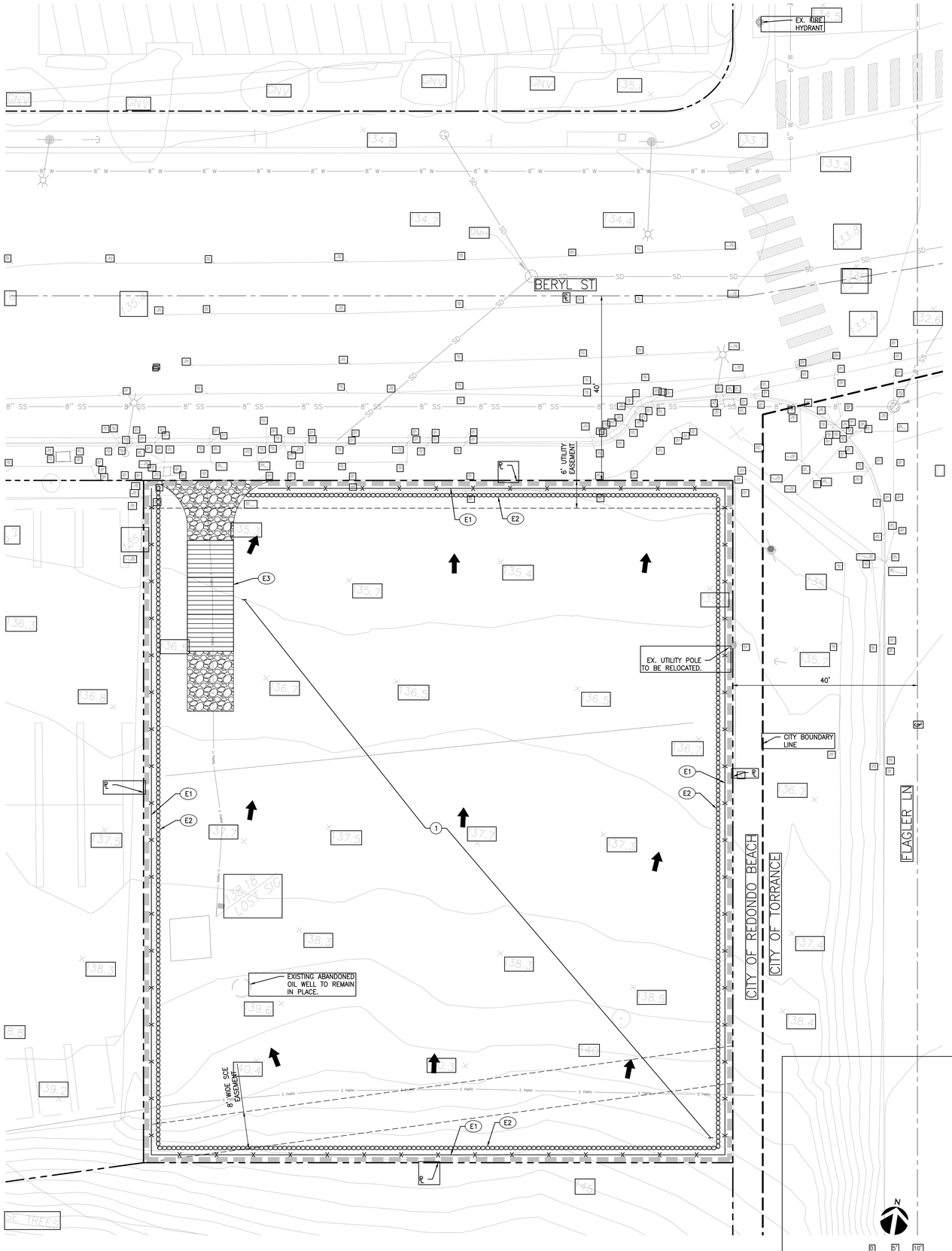

LEGEND

	LIMIT LINE OF WORK
	PROPERTY LINE
	CITY BOUNDARY
	SANDBAG BARRIER
	CONSTRUCTION FENCE
	DIRECTION OF FLOW

EROSION CONTROL NOTES

E1 PLACE TEMPORARY CONSTRUCTION FENCE.

E2 PLACE GRAVEL BAGS TRIPLE ROW PER DETAIL 1, HEREON.

E3 POSSIBLE STABILIZED CONSTRUCTION ENTRANCE LOCATION PER DETAIL 2, HEREON.

DEMOLITION NOTES

D1 SEE GENERAL DEMOLITION NOTES HEREON.

BMP NOTES

THE FOLLOWING BMPS AS OUTLINED IN, BUT NOT LIMITED TO, THE BEST MANAGEMENT PRACTICE HANDBOOK, CALIFORNIA STORMWATER QUALITY TASK FORCE, SACRAMENTO, CALIFORNIA, JULY 2012, MAY APPLY DURING THE CONSTRUCTION OF THIS PROJECT (ADDITIONAL MEASURES MAY BE REQUIRED IF DEEMED APPROPRIATE BY CITY INSPECTORS):

EROSION CONTROL

EC1–SCHEDULING
EC2–PRESERVATION OF EXISTING VEGETATION
EC3–HYDRAULIC MULCH
EC4–HYDROSEEDING
EC5–SOIL BINDERS
EC6–STRAW MULCH
EC7–GEOTEXTILES AND MATS
EC8–WOOD MULCHING
EC9–EARTH DIKES AND DRAINAGE SWALES
EC10–VELOCITY DISSIPATION DEVICES
EC11–SLOPE DRAINS
EC12–STREAMBANK STABILIZATION
EC13–RESERVED
EC14–COMPOST BLANKET
EC15–SOIL PREPARATION/ROUGHENING
EC16–NON–VEGETATIVE STABILIZATION

TEMPORARY SEDIMENT CONTROL

SE1–SILT FENCE
SE2–SEDIMENT BASIN
SE3–SEDIMENT TRAP
SE4–CHECK DAM
SE5–FIBER ROLLS
SE6–GRAVEL BAG BERM
SE7–STREET SWEEPING AND VACUUMING
SE8–SANDBAG BARRIER
SE9–STRAW BALE BARRIER
SE10–STORM DRAIN INLET PROTECTION
SE11–ACTIVE TREATMENT SYSTEMS
SE12–MANUFACTURED LINEAR SEDIMENT CONTROLS
SE13–COMPOST SOCKS AND BERMS
SE14–BIOFILTER BAGS

EQUIPMENT TRACKING CONTROL

TC1–STABILIZED CONSTRUCTION ENTRANCE/EXIT
TC2–STABILIZED CONSTRUCTION ROADWAY
TC3–ENTRANCE/OUTLET TIRE WASH

WIND EROSION CONTROL

WE1–WIND EROSION CONTROL

NON–STORMWATER MANAGEMENT

NS1–WATER CONSERVATION PRACTICES
NS2–DEWATERING OPERATIONS
NS3–PAVING AND GRINDING OPERATIONS
NS4–TEMPORARY STREAM CROSSING
NS5–CLEAR WATER DIVERSION
NS6–ILLICIT CONNECTION/DISCHARGE
NS7–POTABLE WATER/IRRIGATION
NS8–VEHICLE AND EQUIPMENT CLEANING
NS9–VEHICLE AND EQUIPMENT FUELING
NS10–VEHICLE AND EQUIPMENT MAINTENANCE
NS11–PILE DRIVING OPERATIONS
NS12–CONCRETE CURING
NS13–CONCRETE FINISHING
NS14–MATERIAL OVER WATER
NS15–DEMOLITION ADJACENT TO WATER
NS16–TEMPORARY BATCH PLANTS

WASTE MANAGEMENT & MATERIALS POLLUTION CONTROL

WM1–MATERIAL DELIVERY AND STORAGE
WM2–MATERIAL USE
WM3–STOCKPILE MANAGEMENT
WM4–SPILL PREVENTION AND CONTROL
WM5–SOLID WASTE MANAGEMENT
WM6–HAZARDOUS WASTE MANAGEMENT
WM7–CONTAMINATED SOIL MANAGEMENT
WM8–CONCRETE WASTE MANAGEMENT
WM9–SANITARY/SEPTIC WASTE MANAGEMENT
WM10–LIQUID WASTE MANAGEMENT

EROSION CONTROL NOTES

1. TEMPORARY EROSION CONTROL DEVICES SHOWN ON THE GRADING PLAN WHICH INTERFERE WITH THE WORK SHALL BE RELOCATED OR MODIFIED AS AND WHEN THE INSPECTOR SO DIRECTS AS THE WORK PROGRESSES TO MEET "AS GRADED" CONDITIONS.
2. ALL LOOSE SOIL AND DEBRIS SHALL BE REMOVED FROM THE STREET AREAS UPON STARTING OPERATIONS AND PERIODICALLY THEREAFTER AS DIRECTED BY THE INSPECTOR
3. WHEN THE INSPECTOR SO DIRECTS, A 12–INCH BERM SHALL BE MAINTAINED ALONG THE TOP OF THE SLOPE OF THOSE FILLS ON WHICH GRADING IS NOT IN PROGRESS.
4. STORM AND SEWER DRAIN TRENCHES THAT ARE CUT THROUGH BASIN DIKES OR BASIN INLET DIKES SHALL BE PLUGGED WITH SANDBAGS.
5. EXCEPT WHEN THE INSPECTOR DIRECTS OTHERWISE, ALL DEVICES SHOWN SHALL BE IN PLACE AT THE END OF EACH WORKING DAY WHEN RAIN IS FORECAST, AND SHALL BE MAINTAINED DURING THE RAINY SEASON (OCTOBER 15 TO APRIL 15).
6. SANDBAGS SHALL BE STOCKPILED ON SITE, READY TO BE PLACED IN POSITION WHEN RAIN IS FORECAST, OR WHEN THE INSPECTOR SO DIRECTS.
7. A "STANDBY EMERGENCY CREW" SHALL BE ALERTED BY THE PERMITTEE OR THE CONTRACTOR TO PERFORM EMERGENCY WORK DURING RAINSTORMS. THE PARTY TO BE CONTACTED IS:
   NAME: _____ (TO BE FILLED IN BY CONTRACTOR)
   PHONE NUMBER: _____

DUST CONTROL NOTES

1. DUST SHALL BE CONTROLLED BY WATERING AND/OR APPLYING A DUST PALLIATIVE. THE DUST PALLIATIVE SHALL BE APPLIED IN THE AMOUNT AT THE LOCATIONS AS DIRECTED BY THE ENGINEER.
2. WATER FOR DUST CONTROL SHALL BE APPLIED BY MEANS OF PRESSURE TYPE DISTRIBUTORS OR PIPE LINES EQUIPPED WITH A SPRAY SYSTEM OR HOSES WITH NOZZLES THAT WILL INSURE A UNIFORM APPLICATION OF WATER.
3. UNLESS WATER IS APPLIED BY MEANS OF PIPE LINES, AT LEAST ONE MOBILE UNIT WITH A MINIMUM CAPACITY OF 100 GALLONS SHALL BE AVAILABLE FOR APPLYING WATER.
4. ALL SOIL MATERIALS OR DEBRIS TRUCKED FROM THE SITE SHALL BE COVERED AND SPRINKLED PRIOR TO ENTERING PUBLIC STREETS.
5. PROVIDE FOR WET SUPPRESSION OR CHEMICAL STABILIZING OF EXPOSED SOILS.
6. PROVIDE FOR RAPID CLEAN–UP OF SEDIMENTS DEPOSITED ON THE PAVED ROADS.
7. LIMIT THE AMOUNT OF AREAS DISTURBED BY CLEARING & EARTH MOVING OPERATIONS BY SCHEDULING THESE ACTIVITIES IN PHASES.

GENERAL DEMOLITION NOTES

1. CONTRACTOR TO CLEAR PROJECT SITE AREA WITHIN THE CONFINES OF THE DEMOLITION LIMIT LINE. THE CONTRACTOR SHALL DEMOLISH AND REMOVE FROM THE SITE ALL EXISTING UTILITIES, STRUCTURES, PLANTERS, TREES, AND ALL OTHER SITE FEATURES, UNLESS OTHERWISE NOTED ON THE PLAN.
2. REMOVAL OF LANDSCAPING SHALL INCLUDE ROOTS AND ORGANIC MATERIALS.
3. THE CONTRACTOR SHALL BE RESPONSIBLE FOR OBTAINING ANY AND ALL PERMITS AND SHALL PAY ALL FEES NECESSARY FOR ENCROACHMENT, GRADING, DEMOLITION AND DISPOSAL OF SAID MATERIALS AS REQUIRED BY PRIVATE, LOCAL AND STATE JURISDICTIONS.
4. THE CONTRACTOR SHALL BE RESPONSIBLE FOR A SITE INSPECTION TO FULLY ACKNOWLEDGE THE EXTENT OF THE DEMOLITION WORK.
5. THE CONTRACTOR SHALL VERIFY AND LOCATE ALL EXISTING ABOVE AND UNDERGROUND UTILITIES. LOCATIONS SHOWN ON THE PLANS ARE APPROXIMATE AND ARE SHOWN FOR GENERAL INFORMATION ONLY.
6. DAMAGE TO ANY EXISTING UTILITIES AND SERVICES TO REMAIN SHALL BE THE RESPONSIBILITY OF THE CONTRACTOR. CONTRACTOR SHALL REPAIR AND/OR REPLACE IN KIND.
7. EROSION CONTROL MEASURES SHALL BE IMPLEMENTED TO PREVENT DEBRIS AND UNSUITABLE MATERIALS FROM ENTERING STORM DRAINS, SANITARY SEWERS AND STREETS.
8. DUST CONTROL SHALL BE IMPLEMENTED DURING DEMOLITION.
9. DEMOLITION IS LIMITED TO WITHIN DEMOLITION LIMIT LINE UNLESS NOTED OTHERWISE.
10. THE CONTRACTOR SHALL VERIFY THE LOCATION AND QUANTITY OF EXISTING SURFACE STRUCTURES AND SHALL BE SOLELY RESPONSIBLE FOR ANY UNIDENTIFIED UTILITIES, IMPROVEMENTS, TREES, ETC. TO BE DEMOLISHED AND REMOVED WITHIN THE DEMOLITION LIMIT LINE, INCLUDING APPURTENANT FOUNDATIONS OR SUPPORTS.
11. DEMOLITION CALLOUTS IN THIS SECTION ARE REPRESENTATIVE OF WHAT IS TO BE DONE, NOT AN ITEMIZED ACCOUNTING FOR EACH PIPE, CATCH BASIN, MANHOLE, VAULT, ETC. THAT IS TO BE DEMOLISHED, REMOVED AND DISPOSED OF.

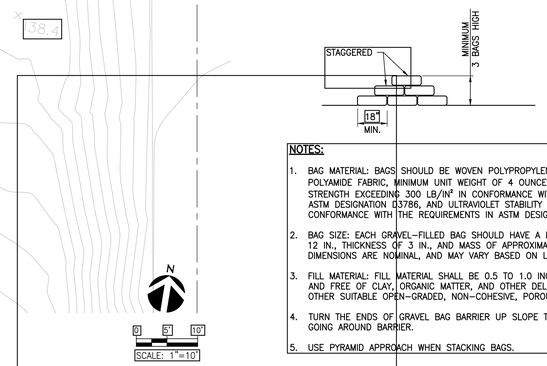

NOTES:

1. BAG MATERIAL: BAGS SHOULD BE WOVEN POLYPROPYLENE, POLYETHYLENE OR POLYAMIDE FABRIC, MINIMUM UNIT WEIGHT OF 4 OUNCES/YD², MULLEN BURST STRENGTH EXCEEDING 300 LB/IN² IN CONFORMANCE WITH THE REQUIREMENTS IN ASTM DESIGNATION D3786, AND ULTRAVIOLET STABILITY EXCEEDING 70% IN CONFORMANCE WITH THE REQUIREMENTS IN ASTM DESIGNATION D4355.
2. BAG SIZE: EACH GRAVEL–FILLED BAG SHOULD HAVE A LENGTH OF 18 IN., WIDTH OF 12 IN., THICKNESS OF 3 IN., AND MASS OF APPROXIMATELY 33 LBS. BAG DIMENSIONS ARE NOMINAL, AND MAY VARY BASED ON LOCALLY AVAILABLE MATERIALS.
3. FILL MATERIAL: FILL MATERIAL SHALL BE 0.5 TO 1.0 INCH CRUSHED ROCK, CLEAN AND FREE OF CLAY, ORGANIC MATTER, AND OTHER DELETERIOUS MATERIAL, OR OTHER SUITABLE OPEN–GRADED, NON–COHESIVE, POROUS GRAVEL.
4. TURN THE ENDS OF GRAVEL BAG BARRIER UP SLOPE TO PREVENT RUNOFF FROM GOING AROUND BARRIER.
5. USE PYRAMID APPROACH WHEN STACKING BAGS.

1 GRAVEL BAG BARRIER
N.T.S.

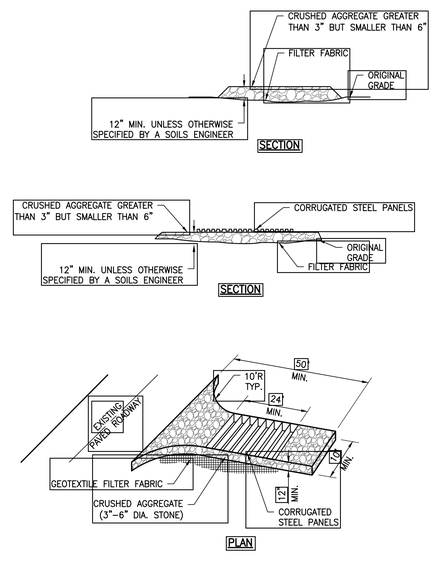

NOTES:

1. THE CONSTRUCTION ENTRANCE ROADWAYS SHALL BE STABILIZED SO AS TO PREVENT SEDIMENTS FROM BEING DEPOSITED INTO THE PUBLIC ROADS. DEPOSITIONS MUST BE SWEPT UP IMMEDIATELY AND MAY NOT BE WASHED DOWN BY RAIN OR OTHER MEANS INTO THE STORM DRAIN SYSTEM.
2. STABILIZED CONSTRUCTION ENTRANCE SHALL BE LOCATED AT ANY POINT WHERE TRAFFIC WILL BE ENTERING OR LEAVING A CONSTRUCTION SITE OR FROM A PUBLIC RIGHT OF WAY, STREET, ALLEY, AND SIDEWALK OR PARKING AREA.
3. IF A WASH RACK IS INCLUDED, A SEDIMENT TRAP OF SOME KIND MUST ALSO BE PROVIDED TO COLLECT WASH WATER RUNOFF.
4. ALL VEHICLES ACCESSING THE CONSTRUCTION SITE SHALL UTILIZE THE STABILIZED CONSTRUCTION ENTRANCE.

STREET MAINTENANCE NOTES

1. REMOVE ALL SEDIMENT DEPOSITED ON PAVED ROADWAYS IMMEDIATELY.
2. SWEEP PAVED AREAS THAT RECEIVE CONSTRUCTION TRAFFIC WHENEVER SEDIMENT BECOMES VISIBLE.
3. PAVEMENT WASHING WITH WATER IS PROHIBITED IF IT RESULTS IN A DISCHARGE TO THE STORM DRAIN SYSTEM

2 STABILIZED CONSTRUCTION ENTRANCE
N.T.S.

PAUL MURDOCH ARCHITECTS

6310 SAN VICENTE BLVD. SUITE 400
LOS ANGELES, CA 90048
T. 310 358-0993

THE DRAWINGS AND SPECIFICATIONS AND IDEAS, DESIGNS, AND ARRANGEMENTS REPRESENTED THEREBY ARE AND SHALL REMAIN THE PROPERTY OF THE ARCHITECT, AND NO PART THEREOF SHALL BE COPIED, DISCLOSED TO OTHERS, OR USED IN CONNECTION WITH ANY WORK OR PROJECT OTHER THAN THE SPECIFIC PROJECT FOR WHICH THEY HAVE BEEN PREPARED AND DEVELOPED WITHOUT THE WRITTEN CONSENT OF THE ARCHITECT. VISUAL CONTACT WITH THESE DRAWINGS OR SPECIFICATIONS SHALL CONSTITUTE CONCLUSIVE EVIDENCE OF ACCEPTANCE OF THESE RESTRICTIONS. WRITTEN DIMENSIONS ON THESE DRAWINGS SHALL HAVE PRECEDENCE OVER SCALED DIMENSIONS. CONTRACTORS SHALL VERIFY AND BE RESPONSIBLE FOR ALL DIMENSIONS AND CONDITIONS ON THE JOB AND THIS OFFICE MUST BE NOTIFIED OF ANY VARIATIONS FROM THE DIMENSIONS AND CONDITIONS SHOWN BY THESE DRAWINGS. SHOP DETAILS MUST BE SUBMITTED TO THIS OFFICE FOR REVIEW BEFORE PROCEEDING WITH FABRICATION.

Labib Funk + Associates
Structural | Shoring | Civil | EBM

319 Main Street
El Segundo, California 90245
t: 213/ 239 9700
LFA Job No. 23798

NO.	DATE	REVISION

allcove
BEACH CITIES HEALTH DISTRICT

100% PRELIMINARY DESIGN SUBMITTAL

PMA PROJECT NO.
23007

DRAWING TITLE
DEMOLITION AND EROSION CONTROL PLAN

SCALE
PER PLAN

DATE
02/28/2024

DRAWN I.S. CHECKED F.L.

SHEET NO.
C100

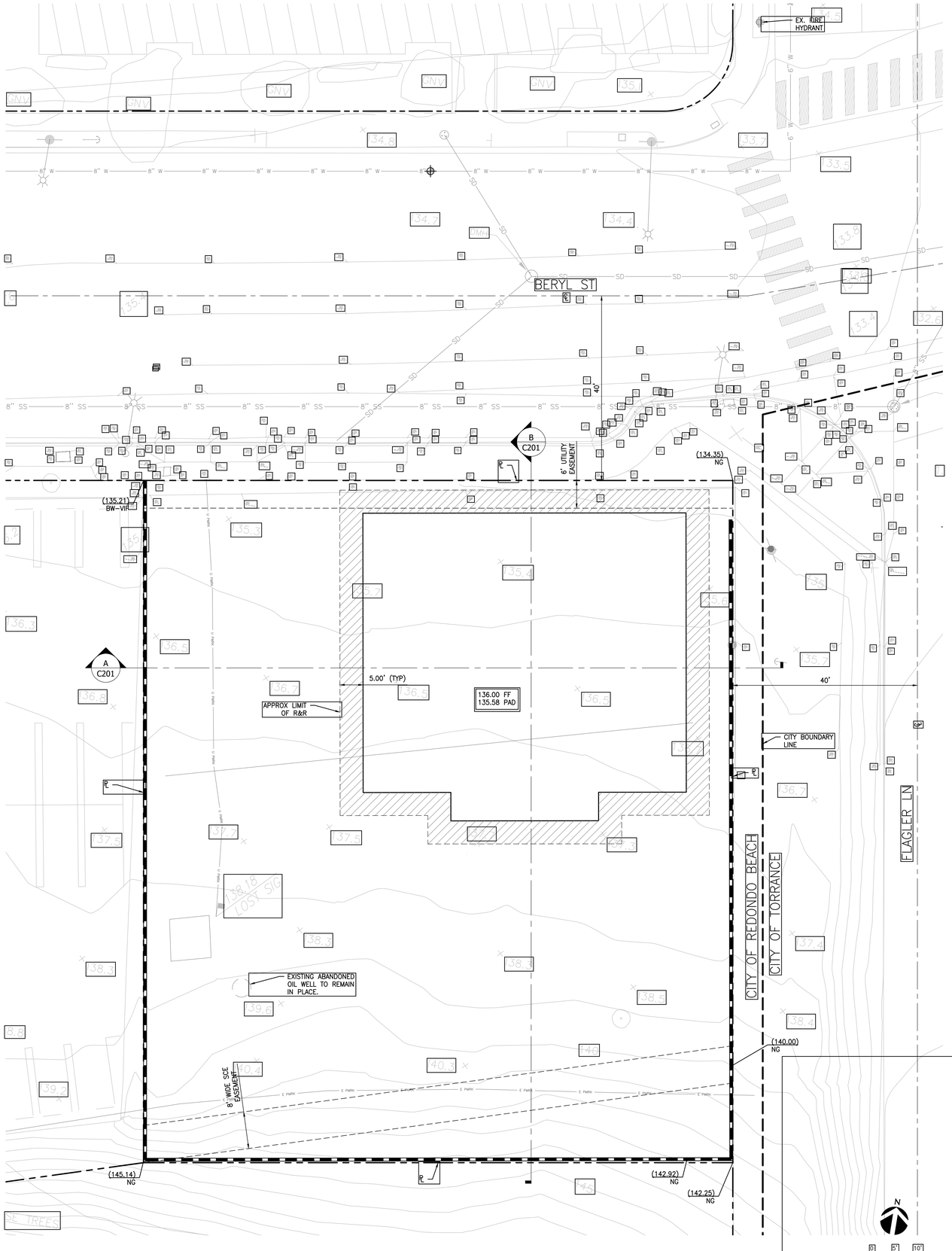

LEGEND

— — —	PROPERTY LINE
— — —	CITY BOUNDARY
▨	REMOVAL AND RECOMPACTION

NOTES

1. REMOVAL AND RECOMPACTION REQUIREMENTS ARE BASED ON THE RECOMMENDATIONS CONTAINED IN THE GEOTECHNICAL INVESTIGATION "SUPPLEMENTAL GEOTECHNICAL STUDY REPORT" DATED MAY 27, 2022 BY CONVERSE CONSULTANTS.
1. ROUGH GRADE ASSUMES PAD IS 5" BENEATH FINISHED FLOOR. SEE ARCHITECTURAL AND STRUCTURAL PLANS FOR FINAL ELEVATIONS AND FOUNDATION DETAILS.
2. TO PROTECT THE PUBLIC, PLEASE PROVIDE PROTECTIVE MEASURES ALONG THE WALKWAY ROW ADJACENT TO SLOT CUTS AND TEMPORARY EXCAVATIONS.
3. IF ANY ADJACENT ROW STRUCTURES AND SUBSTRUCTURES ARE DAMAGED DUE TO THE UN-RETAINED SOILS FROM THE SLOT CUTS AND TEMPORARY EXCAVATIONS, THE DEVELOPING OWNER/CONTRACTOR WILL NEED TO REPAIR IT AT NO COST TO THE CITY OF REDONDO BEACH.
4. STOCKPILING OF EXCAVATED MATERIAL SHALL NOT BE ALLOWED ADJACENT TO OPEN EXCAVATIONS.

CONSTRUCTION SEQUENCING:

EXCAVATIONS LOCATED ALONG THE PROPERTY LINE MAY BE MADE BY THE SOT-CUTTING METHOD TO 8 FEET HIGH. THIS METHOD EMPLOYS THE USE OF THE EARTH AS A BUTTRESS AND ALLOWS THE EXCAVATION TO PROCEED IN PHASES. THE INITIAL EXCAVATION IS MADE AT A SLOPE OF 1:1 (H:V). SLOTS ARE CUT, USING THE ABC METHOD, IN WHICH ALL SLOTS ARE OF THE SAME WIDTH. THE INITIAL SLOT "A" IS CUT 8 FEET IN WIDTH, LEAVING THE "B" AND "C" SLOTS TO BUTTRESS THE EXCAVATION. THE "A" SLOT IS BACKFILLED; THE SAME PROCEDURE IS USED FOR THE "B" SLOTS; THEN THE "C" SLOTS.

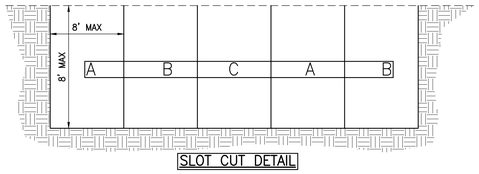

SLOT CUT DETAIL

SLOT CUT SEQUENCE (ABC METHOD):

1. EXCAVATE A SLOTS AND BACKFILL COMPLETELY WHILE LEAVING B AND C SLOTS IN PLACE.
2. AFTER A SLOTS ARE FULLY BACKFILLED AND COMPACTED, EXCAVATE B SLOTS AND BACKFILL COMPLETELY WHILE LEAVING A AND C SLOTS IN PLACE.
3. AFTER B SLOTS ARE FULLY BACKFILLED AND COMPACTED, EXCAVATE C SLOTS AND BACKFILL COMPLETELY WHILE LEAVING A AND B SLOTS IN PLACE.

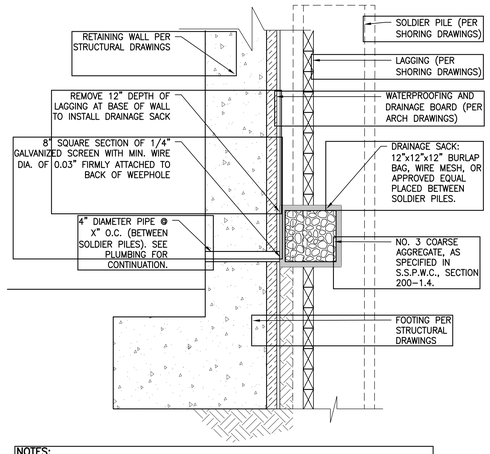

NOTES:

1. FOUNDATION WALL DRAINAGE SHALL ADHERE TO THE LATEST BUILDING ADMINISTRATIVE CODES.

1 C200 FOOTING DRAIN DETAIL FOR SHORED CONDITION
NTS

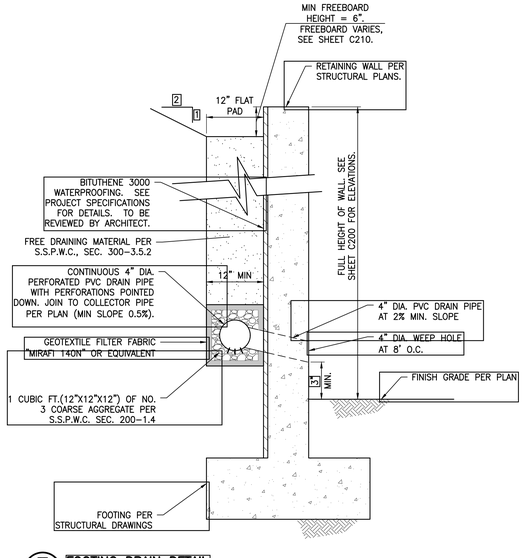

2 C200 FOOTING DRAIN DETAIL
NTS

PAUL MURDOCH ARCHITECTS

6310 SAN VICENTE BLVD. SUITE 400
LOS ANGELES, CA 90048
T. 310 358-0993

THE DRAWINGS AND SPECIFICATIONS AND IDEAS, DESIGNS, AND ARRANGEMENTS REPRESENTED THEREBY ARE AND SHALL REMAIN THE PROPERTY OF THE ARCHITECT, AND NO PART THEREOF SHALL BE COPIED, DISCLOSED TO OTHERS, OR USED IN CONNECTION WITH ANY WORK OR PROJECT OTHER THAN THE SPECIFIC PROJECT FOR WHICH THEY HAVE BEEN PREPARED AND DEVELOPED WITHOUT THE WRITTEN CONSENT OF THE ARCHITECT. VISUAL CONTACT WITH THESE DRAWINGS OR SPECIFICATIONS SHALL CONSTITUTE CONCLUSIVE EVIDENCE OF ACCEPTANCE OF THESE RESTRICTIONS. WRITTEN DIMENSIONS ON THESE DRAWINGS SHALL HAVE PRECEDENCE OVER SCALED DIMENSIONS. CONTRACTORS SHALL VERIFY AND BE RESPONSIBLE FOR ALL DIMENSIONS AND CONDITIONS ON THE JOB AND THIS OFFICE MUST BE NOTIFIED OF ANY VARIATIONS FROM THE DIMENSIONS AND CONDITIONS SHOWN BY THESE DRAWINGS. SHOP DETAILS MUST BE SUBMITTED TO THIS OFFICE FOR REVIEW BEFORE PROCEEDING WITH FABRICATION.

Labib Funk + Associates
Structural | Shoring | Civil | EBM

319 Main Street
El Segundo, California 90245
t: 213/ 239 9700
LFA Job No. 23798

NO.	DATE	REVISION

allcove
BEACH CITIES HEALTH DISTRICT

100% PRELIMINARY DESIGN SUBMITTAL

PMA PROJECT NO.
23007

DRAWING TITLE
ROUGH GRADING PLAN

SCALE
PER PLAN

DATE
02/28/2024

DRAWN I.S. CHECKED F.L.

SHEET NO.
C200

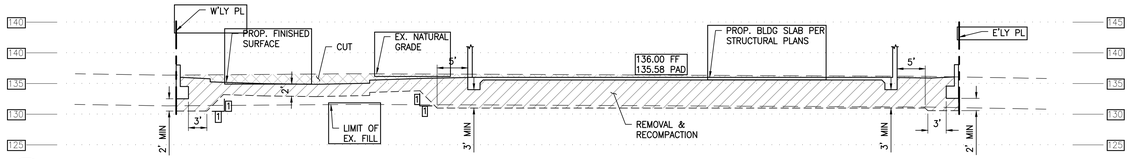

A C200 SECTION DETAIL
1" = 10'

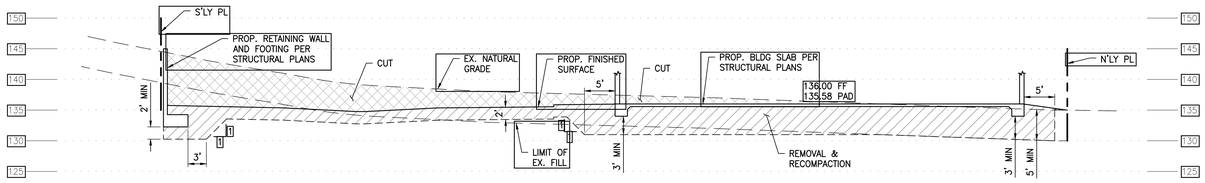

B C200 SECTION DETAIL
1" = 10'

PAUL MURDOCH ARCHITECTS

6310 SAN VICENTE BLVD. SUITE 400
LOS ANGELES, CA 90048
T. 310 358-0993

THE DRAWINGS AND SPECIFICATIONS AND IDEAS, DESIGNS, AND ARRANGEMENTS REPRESENTED THEREBY ARE AND SHALL REMAIN THE PROPERTY OF THE ARCHITECT, AND NO PART THEREOF SHALL BE COPIED, DISCLOSED TO OTHERS, OR USED IN CONNECTION WITH ANY WORK OR PROJECT OTHER THAN THE SPECIFIC PROJECT FOR WHICH THEY HAVE BEEN PREPARED AND DEVELOPED WITHOUT THE WRITTEN CONSENT OF THE ARCHITECT. VISUAL CONTACT WITH THESE DRAWINGS OR SPECIFICATIONS SHALL CONSTITUTE CONCLUSIVE EVIDENCE OF ACCEPTANCE OF THESE RESTRICTIONS. WRITTEN DIMENSIONS ON THESE DRAWINGS SHALL HAVE PRECEDENCE OVER SCALED DIMENSIONS. CONTRACTORS SHALL VERIFY AND BE RESPONSIBLE FOR ALL DIMENSIONS AND CONDITIONS ON THE JOB AND THIS OFFICE MUST BE NOTIFIED OF ANY VARIATIONS FROM THE DIMENSIONS AND CONDITIONS SHOWN BY THESE DRAWINGS. SHOP DETAILS MUST BE SUBMITTED TO THIS OFFICE FOR REVIEW BEFORE PROCEEDING WITH FABRICATION.

Labib Funk + Associates
Structural | Shoring | Civil | EBM

319 Main Street
El Segundo, California 90245
t: 213/ 239 9700
LFA Job No. 23798

NO. DATE REVISION

allcove
BEACH CITIES
HEALTH DISTRICT

100% PRELIMINARY DESIGN SUBMITTAL

PMA PROJECT NO.
23007

DRAWING TITLE
ROUGH GRADING SECTIONS

SCALE
PER PLAN

DATE
02/28/2024

DRAWN I.S.
CHECKED F.L.

SHEET NO.
C201

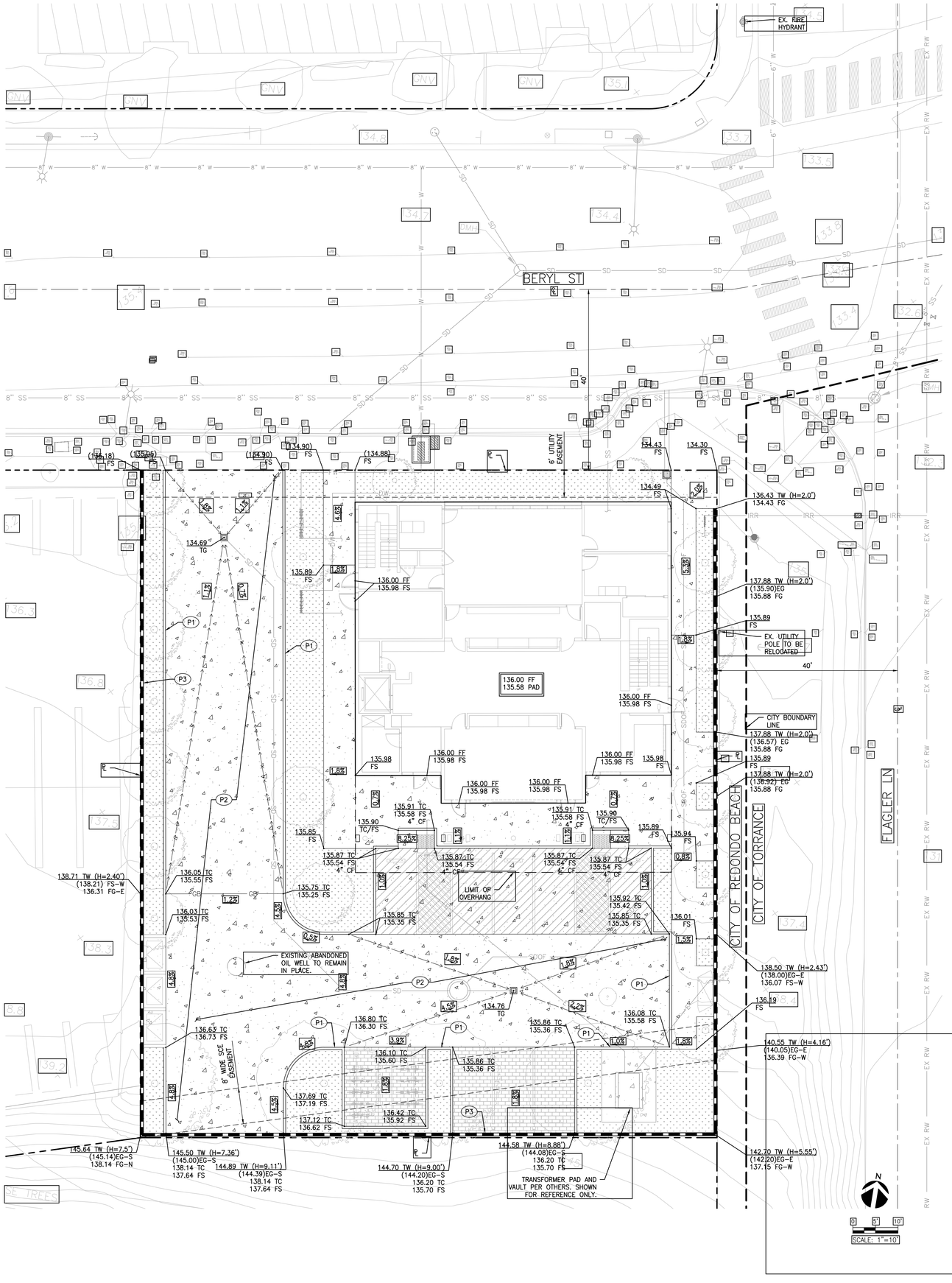

LEGEND

	PROPERTY LINE
	CITY BOUNDARY
	PROPOSED CONCRETE
	PROPOSED CONCRETE. COLOR AND SCORE PATTERNS PER LANDSCAPE PLANS.
	PROPOSED CONCRETE PER OTHERS
	LANDSCAPE PER LANDSCAPE PLANS
	PERMEABLE PAVERS PER LANDSCAPE PLANS

CONSTRUCTION NOTES

- P1 CURB PER DETAIL **1**, HEREON. 6" CURB FACE UNLESS OTHERWISE NOTED ON PLAN.
- P2 CONCRETE PAVEMENT PER DETAIL **2**, HEREON.
- P3 RETAINING WALL PER STRUCTURAL PLANS.

NOTES:

1. EXISTING JOIN ELEVATIONS SHALL BE VERIFIED IN FIELD. SURVEY DOES NOT INCLUDE UPDATED ELEVATIONS FOR BERYL STREET STREET IMPROVEMENTS.

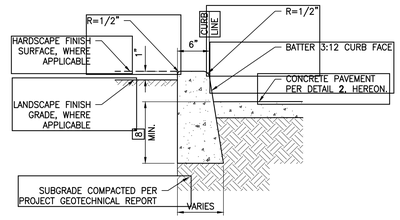

NOTES:

1. ISOLATION JOINTS SHALL BE PLACED ONLY AS SPECIFIED.
2. CONTROL JOINTS CONSISTING OF 1" DEEP SCORES SHALL BE PLACED AT 10' INTERVALS O.C.
3. WHERE A WALK IS ADJACENT TO THE CURB, THE JOINTS SHALL ALIGN WITH JOINTS IN THE WALK.

1 CONCRETE CURB

N.T.S.

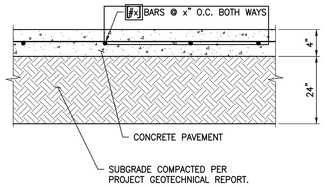

NOTES:

1. PAVEMENT SECTIONS ARE BASED ON RECOMMENDATIONS FROM THE PROJECT GEOTECHNICAL REPORT.
2. REFER TO ARCHITECTURAL PLANS FOR CONCRETE COLOR, PATTERN, TEXTURE, AND FINISH.
3. SEE PLAN FOR LOCATION OF CONTROL JOINTS.

2 CONCRETE PAVEMENT SECTION

N.T.S.

PAUL MURDOCH ARCHITECTS

6310 SAN VICENTE BLVD. SUITE 400
LOS ANGELES, CA 90048
T. 310 358-0993

THE DRAWINGS AND SPECIFICATIONS AND IDEAS, DESIGNS, AND ARRANGEMENTS REPRESENTED THEREBY ARE AND SHALL REMAIN THE PROPERTY OF THE ARCHITECT, AND NO PART THEREOF SHALL BE COPIED, DISCLOSED TO OTHERS, OR USED IN CONNECTION WITH ANY WORK OR PROJECT OTHER THAN THE SPECIFIC PROJECT FOR WHICH THEY HAVE BEEN PREPARED AND DEVELOPED WITHOUT THE WRITTEN CONSENT OF THE ARCHITECT. VISUAL CONTACT WITH THESE DRAWINGS OR SPECIFICATIONS SHALL CONSTITUTE CONCLUSIVE EVIDENCE OF ACCEPTANCE OF THESE RESTRICTIONS. WRITTEN DIMENSIONS ON THESE DRAWINGS SHALL HAVE PRECEDENCE OVER SCALED DIMENSIONS. CONTRACTORS SHALL VERIFY AND BE RESPONSIBLE FOR ALL DIMENSIONS AND CONDITIONS ON THE JOB AND THIS OFFICE MUST BE NOTIFIED OF ANY VARIATIONS FROM THE DIMENSIONS AND CONDITIONS SHOWN BY THESE DRAWINGS. SHOP DETAILS MUST BE SUBMITTED TO THIS OFFICE FOR REVIEW BEFORE PROCEEDING WITH FABRICATION.

Labib Funk + Associates
Structural | Shoring | Civil | EBM

319 Main Street
El Segundo, California 90245
t: 213/ 239 9700
LFA Job No. 23798

NO.	DATE	REVISION

allcove
BEACH CITIES HEALTH DISTRICT

100% PRELIMINARY DESIGN SUBMITTAL

PMA PROJECT NO.
23007

DRAWING TITLE
GRADING AND DRAINAGE PLAN

SCALE
PER PLAN

DATE
02/28/2024

DRAWN I.S. CHECKED F.L.

SHEET NO.
C210

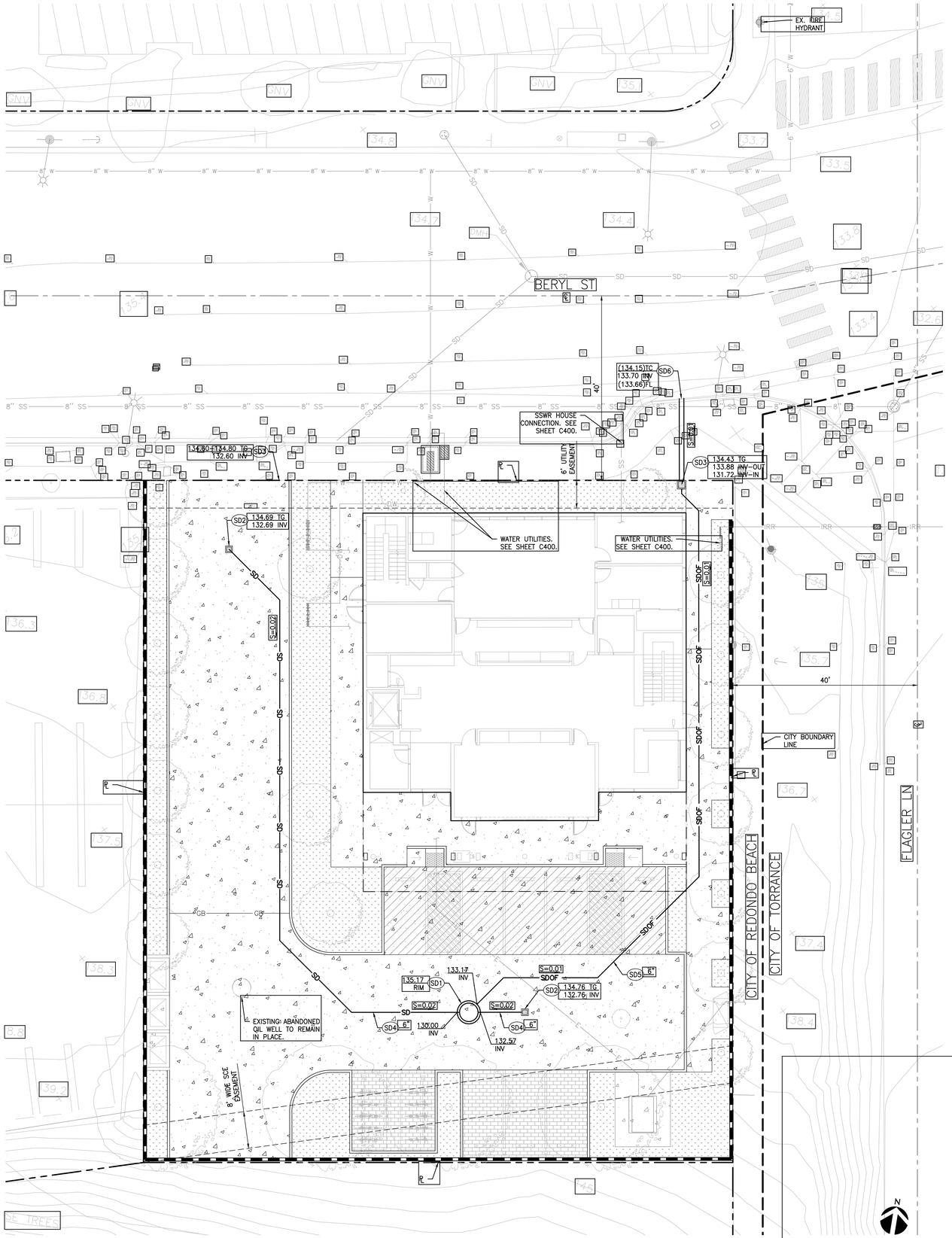

LEGEND

	PROPERTY LINE
	CITY BOUNDARY
	PROPOSED CONCRETE
	PROPOSED CONCRETE. COLOR AND SCORE PATTERNS PER LANDSCAPE PLANS.
	PROPOSED CONCRETE PER OTHERS
	LANDSCAPE PER LANDSCAPE PLANS
	PERMEABLE PAVERS PER LANDSCAPE PLANS
SD	STORM DRAIN PIPE
	AREA DRAIN/CATCH BASIN

CONSTRUCTION NOTES

SD1	DRYWELL PER DETAIL 1, HEREON.
SD2	12"X12" CATCH BASIN BY NDS PRO OR APPROVED EQUAL.
SD3	18"X18" BUBBLER BOX PER DETAIL 2, HEREON.
SD4	PVC STORM DRAIN PIPE. SIZE PER PLAN.
SD5	PVC OVERFLOW STORM DRAIN PIPE.
SD6	PARKWAY DRAIN PER APWA STD PLAN 151-3. S=12"

PROJECT SITE CHARACTERISTICS

	QUANTITIES
TOTAL SITE AREA (S.F.)	18,864
IMPERVIOUS AREA (S.F.)	14,942
% IMPERVIOUS	79%
*LANDSCAPE (S.F.)	3,094
PERMEABLE PAVERS (S.F.)	828
TOTAL PERVIOUS AREA (S.F.)	3,922
RAINFALL DEPTH (IN.) - 95th	1.42
DESIGN VOLUME (C.F.)	1,621

*LANDSCAPE AREA UNDER OVER HANG NOT INCLUDED.

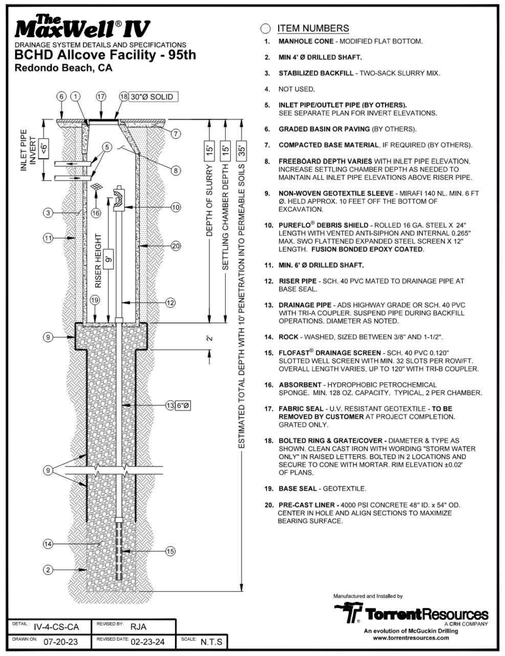

ITEM NUMBERS

1. **MANHOLE CONE** - MODIFIED FLAT BOTTOM.
2. **MIN 4' Ø DRILLED SHAFT.**
3. **STABILIZED BACKFILL** - TWO-SACK SLURRY MIX.
4. NOT USED.
5. **INLET PIPE/OUTLET PIPE (BY OTHERS).** SEE SEPARATE PLAN FOR INVERT ELEVATIONS.
6. **GRADED BASIN OR PAVING** (BY OTHERS).
7. **COMPACTED BASE MATERIAL**. IF REQUIRED (BY OTHERS).
8. **FREEBOARD DEPTH VARIES** WITH INLET PIPE ELEVATION. INCREASE SETTLING CHAMBER DEPTH AS NEEDED TO MAINTAIN ALL INLET PIPE ELEVATIONS ABOVE RISER PIPE.
9. **NON-WOVEN GEOTEXTILE SLEEVE** - MIRAFI 140 NL. MIN. 6 FT Ø. HELD APPROX. 10 FEET OFF THE BOTTOM OF EXCAVATION.
10. **PUREFLO® DEBRIS SHIELD** - ROLLED 16 GA. STEEL X 24" LENGTH WITH VENTED ANTI-SIPHON AND INTERNAL 0.265" MAX. SWO FLATTENED EXPANDED STEEL SCREEN X 12" LENGTH. **FUSION BONDED EPOXY COATED**.
11. **MIN. 6' Ø DRILLED SHAFT.**
12. **RISER PIPE** - SCH. 40 PVC MATED TO DRAINAGE PIPE AT BASE SEAL.
13. **DRAINAGE PIPE** - ADS HIGHWAY GRADE OR SCH. 40 PVC WITH TRI-A COUPLER. SUSPEND PIPE DURING BACKFILL OPERATIONS. DIAMETER AS NOTED.
14. **ROCK** - WASHED, SIZED BETWEEN 3/8" AND 1-1/2".
15. **FLOFAST® DRAINAGE SCREEN** - SCH. 40 PVC 0.120" SLOTTED WELL SCREEN WITH MIN. 32 SLOTS PER ROW/FT. OVERALL LENGTH VARIES, UP TO 120" WITH TRI-B COUPLER.
16. **ABSORBENT** - HYDROPHOBIC PETROCHEMICAL SPONGE. MIN. 128 OZ. CAPACITY. TYPICAL, 2 PER CHAMBER.
17. **FABRIC SEAL** - U.V. RESISTANT GEOTEXTILE - **TO BE REMOVED BY CUSTOMER** AT PROJECT COMPLETION. GRATED ONLY.
18. **BOLTED RING & GRATE/COVER** - DIAMETER & TYPE AS SHOWN. CLEAN CAST IRON WITH WORDING "STORM WATER ONLY" IN RAISED LETTERS. BOLTED IN 2 LOCATIONS AND SECURE TO CONE WITH MORTAR. RIM ELEVATION ±0.02' OF PLANS.
19. **BASE SEAL** - GEOTEXTILE.
20. **PRE-CAST LINER** - 4000 PSI CONCRETE 48" ID. x 54" OD. CENTER IN HOLE AND ALIGN SECTIONS TO MAXIMIZE BEARING SURFACE.

1 DRYWELL DETAIL
N.T.S.

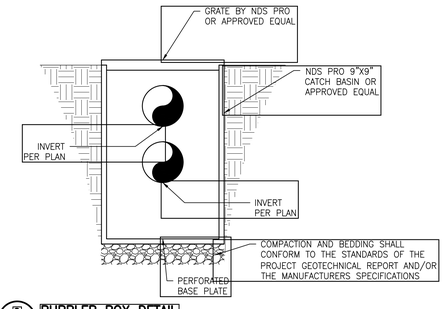

2 BUBBLER BOX DETAIL
N.T.S.

PAUL MURDOCH ARCHITECTS

6310 SAN VICENTE BLVD. SUITE 400
LOS ANGELES, CA 90048
T. 310 358-0993

THE DRAWINGS AND SPECIFICATIONS AND IDEAS, DESIGNS, AND ARRANGEMENTS REPRESENTED THEREBY ARE AND SHALL REMAIN THE PROPERTY OF THE ARCHITECT, AND NO PART THEREOF SHALL BE COPIED, DISCLOSED TO OTHERS, OR USED IN CONNECTION WITH ANY WORK OR PROJECT OTHER THAN THE SPECIFIC PROJECT FOR WHICH THEY HAVE BEEN PREPARED AND DEVELOPED WITHOUT THE WRITTEN CONSENT OF THE ARCHITECT. VISUAL CONTACT WITH THESE DRAWINGS OR SPECIFICATIONS SHALL CONSTITUTE CONCLUSIVE EVIDENCE OF ACCEPTANCE OF THESE RESTRICTIONS. WRITTEN DIMENSIONS ON THESE DRAWINGS SHALL HAVE PRECEDENCE OVER SCALED DIMENSIONS. CONTRACTORS SHALL VERIFY AND BE RESPONSIBLE FOR ALL DIMENSIONS AND CONDITIONS ON THE JOB AND THIS OFFICE MUST BE NOTIFIED OF ANY VARIATIONS FROM THE DIMENSIONS AND CONDITIONS SHOWN BY THESE DRAWINGS. SHOP DETAILS MUST BE SUBMITTED TO THIS OFFICE FOR REVIEW BEFORE PROCEEDING WITH FABRICATION.

LFA
Labib Funk + Associates
Structural | Shoring | Civil | EBM

319 Main Street
El Segundo, California 90245
t: 213/ 239 9700
LFA Job No. 23798

NO.	DATE	REVISION

allcove
BEACH CITIES HEALTH DISTRICT

100% PRELIMINARY DESIGN SUBMITTAL

PMA PROJECT NO.
23007

DRAWING TITLE
LOW IMPACT DEVELOPMENT PLAN

SCALE
PER PLAN

DATE
02/28/2024

DRAWN I.S. CHECKED F.L.

SHEET NO.
C300

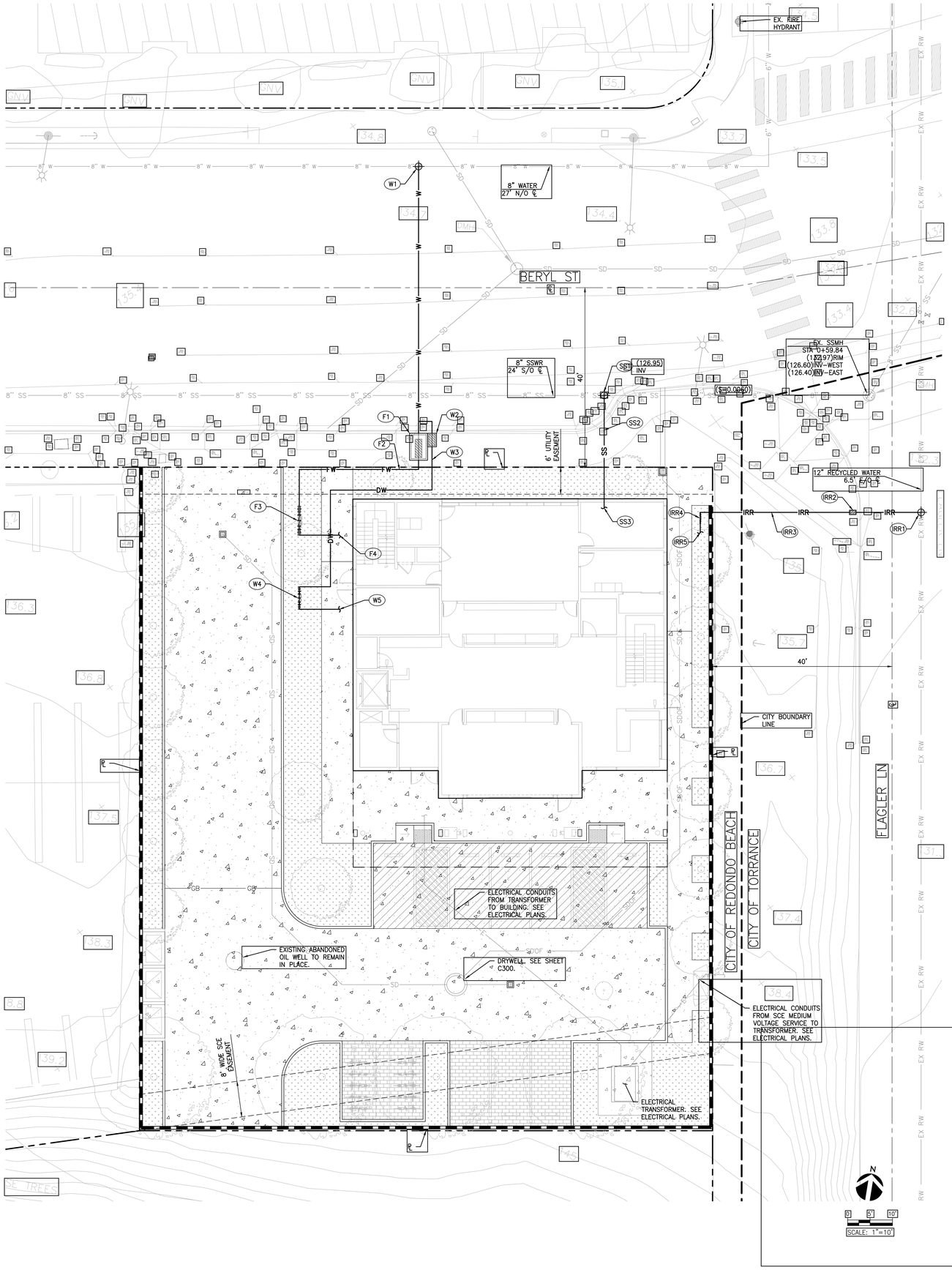

LEGEND

	PROPERTY LINE
	CITY BOUNDARY
	POINT OF CONNECTION
	COORDINATION POINT
	BACKFLOW ASSEMBLY
	WATER METER VAULT

CONSTRUCTION NOTES

SANITARY SEWER

- (SS1) INSTALL SEWER HOUSE CONNECTION PER APWA STANDARD PLAN 222-1, TYPE A.
- (SS2) SDR-35 PVC SANITARY SEWER PIPE. 2% MIN. SLOPE. SIZE TO BE DETERMINED BY PLUMBING ENGINEER.
- (SS3) POINT OF CONNECTION 5 FEET FROM BUILDING FACE. SEE PLUMBING PLANS FOR CONTINUATION. DEPTH AND SIZE TO BE DETERMINED BY PLUMBING ENGINEER.

IRRIGATION WATER

- (IR1) CONTRACTOR TO ORDER AND COORDINATE NEW IRRIGATION WATER SERVICE CONNECTION FROM WEST BASIN MUNICIPAL WATER DISTRICT.
- (IR2) IRRIGATION WATER METER. CONTRACTOR TO COORDINATE WATER SERVICE CONNECTION WITH WEST BASIN MUNICIPAL WATER DISTRICT. SIZE TO BE DETERMINED BY LANDSCAPE ARCHITECT.
- (IR3) SCHEDULE 40 PVC WATER PIPE. SIZE TO BE DETERMINED BY DESIGN-BUILD CONTRACTOR.
- (IR4) WEST BASIN MUNICIPAL WATER DISTRICT APPROVED REDUCED PRESSURE BACK FLOW PREVENTER. SEE IRRIGATION PLANS FOR DETAILS. SIZE TO BE DETERMINED BY DESIGN-BUILD CONTRACTOR.
- (IR5) POINT OF CONNECTION TO IRRIGATION SYSTEM. SEE IRRIGATION PLANS FOR CONTINUATION, DETAILS, AND SPECIFICATIONS.

DOMESTIC WATER

- (W1) CONTRACTOR TO ORDER AND COORDINATE NEW DOMESTIC WATER AND FIRE WATER COMBO SERVICE CONNECTION FROM CALIFORNIA WATER SERVICE.
- (W2) X" DOMESTIC WATER METER. CONTRACTOR TO COORDINATE WATER SERVICE CONNECTION WITH CALIFORNIA WATER SERVICE. SIZE TO BE DETERMINED BY PLUMBING ENGINEER.
- (W3) X" SCHEDULE 40 PVC WATER PIPE. SIZE TO BE DETERMINED BY PLUMBING ENGINEER.
- (W4) CALIFORNIA WATER SERVICE APPROVED REDUCED PRESSURE BACK FLOW PREVENTER. SEE PLUMBING PLANS FOR DETAILS. SIZE TO BE DETERMINED BY PLUMBING ENGINEER.
- (W5) POINT OF CONNECTION 5' FROM BUILDING FACE. SEE PLUMBING PLANS FOR CONTINUATION, DETAILS, AND SPECIFICATIONS.

FIRE WATER

- (F1) FIRE WATER METER TO BE VERIFIED BY DESIGN/BUILD FIRE SPRINKLER PLANS. CONTRACTOR TO COORDINATE WATER SERVICE CONNECTION WITH CALIFORNIA WATER SERVICE. SIZE TO BE DETERMINED BY FIRE SPRINKLER ENGINEER.
- (F2) C-900 PVC WATER PIPE. SIZE TO BE DETERMINED BY FIRE SPRINKLER ENGINEER.
- (F3) CALIFORNIA WATER SERVICE APPROVED DOUBLE CHECK DETECTOR BACK FLOW PREVENTER. SEE FIRE SPRINKLER PLANS FOR DETAILS. SIZE TO BE DETERMINED BY FIRE SPRINKLER ENGINEER.
- (F4) POINT OF CONNECTION 5' FROM BUILDING FACE. SEE FIRE SPRINKLER PLANS FOR CONTINUATION, DETAILS, AND SPECIFICATIONS.

NOTES:

1. THE LOCALLY AVAILABLE MUNICIPAL RECLAIMED WATER IRRIGATION SYSTEM IS TO BE UTILIZED FOR THIS PROJECT. THE CONTRACTOR SHALL DESIGN THE SYSTEM TO MEET THE REQUIREMENTS OF LA COUNTY PUBLIC HEALTH AND THE WEST BASIN MUNICIPAL WATER DISTRICT FOR RECLAIMED WATER IRRIGATION SYSTEMS.

PAUL MURDOCH ARCHITECTS

6310 SAN VICENTE BLVD. SUITE 400
LOS ANGELES, CA 90048
T. 310 358-0993

THE DRAWINGS AND SPECIFICATIONS AND IDEAS, DESIGNS, AND ARRANGEMENTS REPRESENTED THEREBY ARE AND SHALL REMAIN THE PROPERTY OF THE ARCHITECT, AND NO PART THEREOF SHALL BE COPIED, DISCLOSED TO OTHERS, OR USED IN CONNECTION WITH ANY WORK OR PROJECT OTHER THAN THE SPECIFIC PROJECT FOR WHICH THEY HAVE BEEN PREPARED AND DEVELOPED WITHOUT THE WRITTEN CONSENT OF THE ARCHITECT. VISUAL CONTACT WITH THESE DRAWINGS OR SPECIFICATIONS SHALL CONSTITUTE CONCLUSIVE EVIDENCE OF ACCEPTANCE OF THESE RESTRICTIONS. WRITTEN DIMENSIONS ON THESE DRAWINGS SHALL HAVE PRECEDENCE OVER SCALED DIMENSIONS. CONTRACTORS SHALL VERIFY AND BE RESPONSIBLE FOR ALL DIMENSIONS AND CONDITIONS ON THE JOB AND THIS OFFICE MUST BE NOTIFIED OF ANY VARIATIONS FROM THE DIMENSIONS AND CONDITIONS SHOWN BY THESE DRAWINGS. SHOP DETAILS MUST BE SUBMITTED TO THIS OFFICE FOR REVIEW BEFORE PROCEEDING WITH FABRICATION.

LFA
Labib Funk + Associates
Structural | Shoring | Civil | EBM

319 Main Street
El Segundo, California 90245
t: 213/ 239 9700
LFA Job No. 23798

NO.	DATE	REVISION

allcove
BEACH CITIES HEALTH DISTRICT

100% PRELIMINARY DESIGN SUBMITTAL

PMA PROJECT NO.
23007

DRAWING TITLE
UTILITY PLAN

SCALE
PER PLAN

DATE
02/28/2024

DRAWN I.S. CHECKED F.L.

SHEET NO.
C400

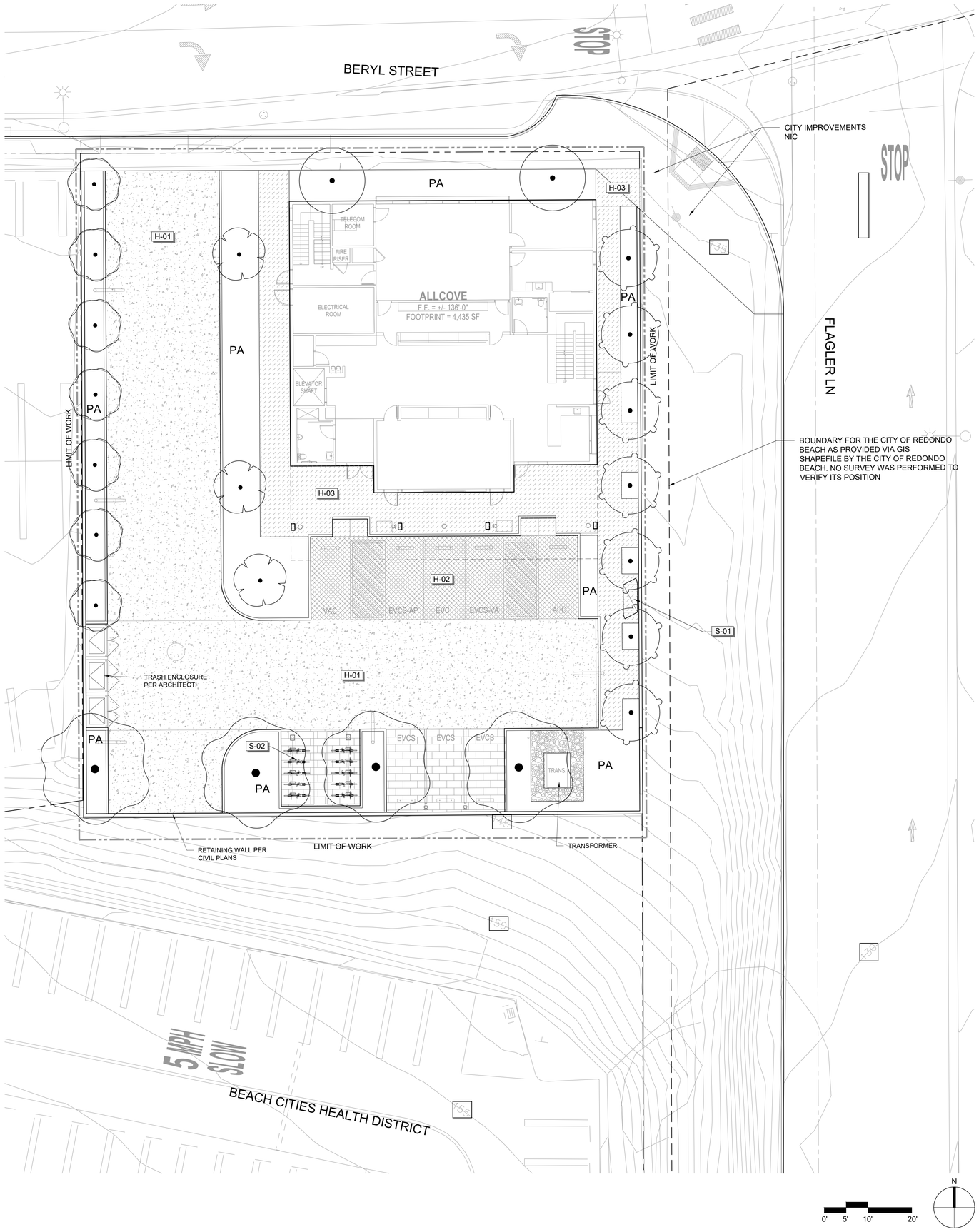

REFERENCE NOTES SCHEDULE

SYMBOL	HARDSCAPE DESCRIPTION	DETAIL
H-01	VEHICULAR CONCRETE PAVING - NATURAL GREY CONCRETE WITH TOPCAST FINISH SEE CIVIL DOCUMENTS	
H-02	DECORATIVE VEHICULAR CONCRETE PAVING - INTEGRAL COLOR CONCRETE - FINISH: TOPCAST OR EQUAL - COLOR: DAVIS COLORS 'OUTBACK' OR EQUAL - SAWCUT JOINTS	
H-03	PEDESTRIAN CONCRETE PAVING - INTEGRAL COLOR CONCRETE - FINISH: TOPCAST OR EQUAL - COLOR: DAVIS COLORS 'OUTBACK' OR EQUAL - SAWCUT JOINTS	3/L300
H-04	PERMEABLE PAVERS 100 MM TRAFFIC RATED - AQUALINA PAVING STONES BY ANGELUS PAVING STONES OR APPROVED EQUAL - BLENDED COLORS: DARK GRAY- PEWTER-CHARCOAL - SIZE VARIES - RUNNING BOND PATTERN	5/L300
H-05	GRAVEL MULCH - SIZE: 3/8" CRUSHED - COLOR: GRAY	1/L300

SYMBOL	SITE AMENITIES DESCRIPTION	DETAIL
S-01	BICYCLE LOCKER - PROVIDE PARKING FOR 2 BIKES	
S-02	BIKE RACKS WITH ELECTRIC CHARGING - PROVIDE PARKING FOR 10 BIKES	

1 HARDSCAPE PLAN

SCALE: 1" = 10'-0"

PAUL MURDOCH ARCHITECTS

6310 SAN VICENTE BLVD. SUITE 400
LOS ANGELES, CA 90048
T. 310 358-0993

THE DRAWINGS AND SPECIFICATIONS AND IDEAS, DESIGNS, AND ARRANGEMENTS REPRESENTED THEREBY ARE AND SHALL REMAIN THE PROPERTY OF THE ARCHITECT, AND NO PART THEREOF SHALL BE COPIED, DISCLOSED TO OTHERS, OR USED IN CONNECTION WITH ANY WORK OR PROJECT OTHER THAN THE SPECIFIC PROJECT FOR WHICH THEY HAVE BEEN PREPARED AND DEVELOPED WITHOUT THE WRITTEN CONSENT OF THE ARCHITECT. VISUAL CONTACT WITH THESE DRAWINGS OR SPECIFICATIONS SHALL CONSTITUTE CONCLUSIVE EVIDENCE OF ACCEPTANCE OF THESE RESTRICTIONS. WRITTEN DIMENSIONS ON THESE DRAWINGS SHALL HAVE PRECEDENCE OVER SCALED DIMENSIONS. CONTRACTORS SHALL VERIFY AND BE RESPONSIBLE FOR ALL DIMENSIONS AND CONDITIONS ON THE JOB AND THIS OFFICE MUST BE NOTIFIED OF ANY VARIATIONS FROM THE DIMENSIONS AND CONDITIONS SHOWN BY THESE DRAWINGS. SHOP DETAILS MUST BE SUBMITTED TO THIS OFFICE FOR REVIEW BEFORE PROCEEDING WITH FABRICATION.

PBCo

PAMELA BURTON & COMPANY
LANDSCAPE ARCHITECTURE

1430 Olympic Boulevard
Santa Monica, CA 90404
310 828 6373 T
310 828 8054 F
www.pamelaburtonco.com

NO. DATE REVISION

allcove
BEACH CITIES
HEALTH DISTRICT

100% PRELIMINARY DESIGN SUBMITTAL

PMA PROJECT NO.
23007

DRAWING TITLE
HARDSCAPE PLAN

SCALE
AS SHOWN

DATE
02/28/2024

DRAWN BB
CHECKED DC,MSM

SHEET NO.
L100

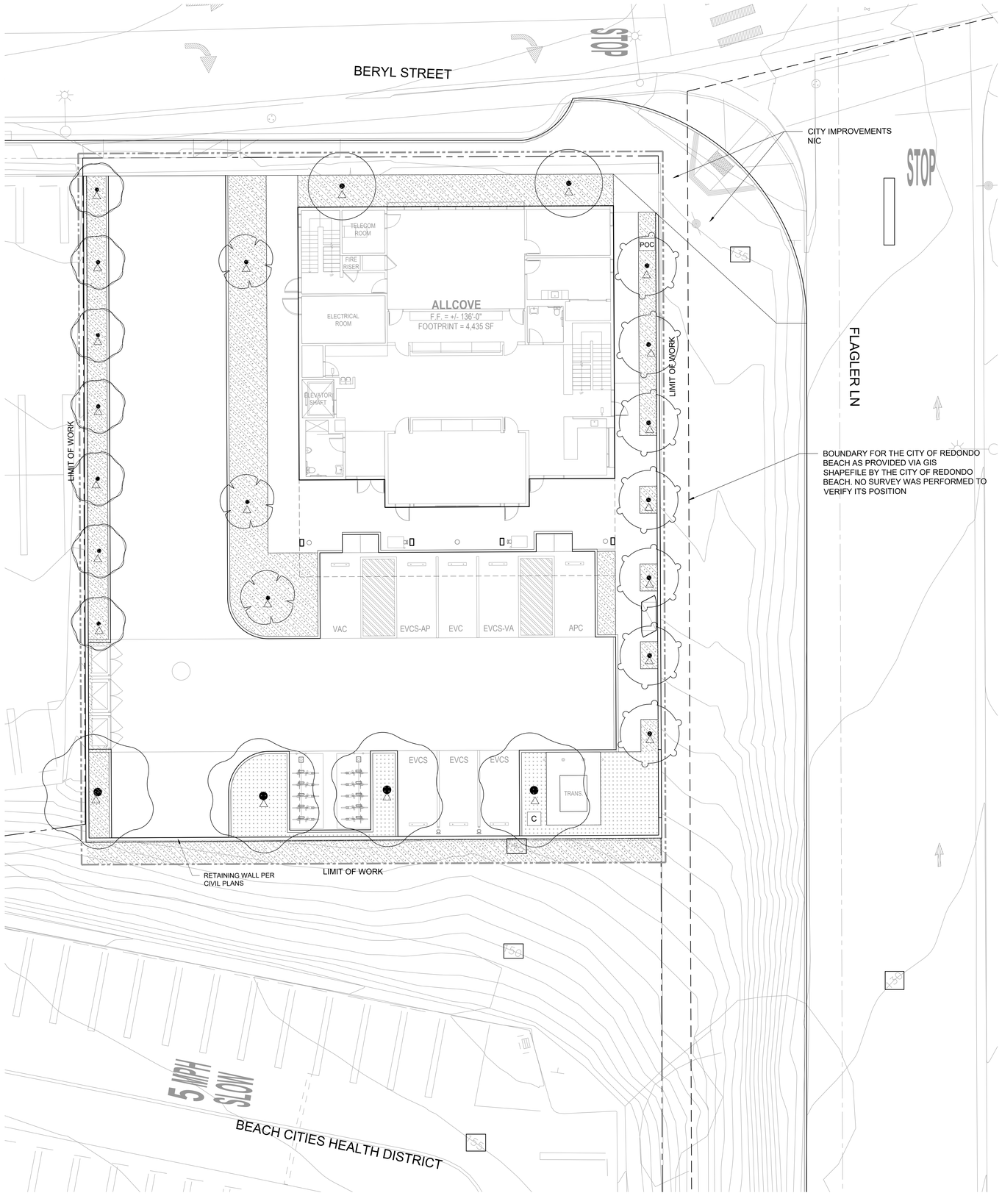

1 PLANTING PLAN

SCALE: 1" = 10'-0"

TREE PLANTING PALETTE

SYMBOL	BOTANICAL NAME	COMMON NAME	CONT	WUCOLS	QTY
TREES					
	CERCIS CANADENSIS `FOREST PANSY`	FOREST PANSY EASTERN REDBUD	36" BOX	M	3
	GEIJERA PARVIFLORA	AUSTRALIAN WILLOW	36" BOX	L	2
	GINKGO BILOBA 'PRINCETON SENTRY'	PRINCETON SENTRY MAIDENHAIR TREE	36" BOX	M	7
	LOPHOSTEMON CONFERTUS	BRISBANE BOX	36" BOX	M	7
	PLATANUS X ACERIFOLIA 'COLUMBIA'	COLUMBIA LONDON PLANE TREE	36" BOX	M	4

SHRUB PLANTING SCHEDULE

	CONT./ WUCOLS	SPACING
PLANT MIX 1		
BACCHARIS PILULARIS 'PIGEON POINT' / PIGEON POINT COYOTE BRUSH	1 GAL, L	36" oc
CEANOTHUS GRISEUS HORIZONTALIS `YANKEE POINT` / YANKEE POINT CARMEL CREEPER	1 GAL, L	36" oc
DIANELLA REVOLUTA `LITTLE REV` / LITTLE REV FLAX LILY	1 GAL, L	18" oc
DIETES BICOLOR / FORTNIGHT LILY	5 GAL, L	24" oc
LANTANA MONTEVIDENSIS / PURPLE TRAILING LANTANA	5 GAL, L	48" oc
PHLOMIS FRUTICOSA / JERUSALEM SAGE	5 GAL, L	36" oc
SALVIA X `ALLEN CHICKERING` / SAGE	5 GAL, L	42" oc
WESTRINGIA FRUTICOSA `SMOKEY` / SMOKEY WESTRINGIA	5 GAL, L	30" oc
PLANT MIX 2		
AGAVE ATTENUATA / FOXTAIL AGAVE	5 GAL, L	36" oc
BOUTELOUA GRACILIS `BLONDE AMBITION` / BLONDE AMBITION BLUE GRAMA	1 GAL, L	18" oc
CAREX DIVULSA / EUROPEAN GREY SEDGE	1 GAL, L	18" oc

PLANTING NOTES

1. FINAL LOCATIONS OF TREES TO BE DETERMINED PENDING FINAL DESIGN OF UNDERGROUND UTILITY LINES. ALL TREES WILL BE PLANTED A MINIMUM OF 10' AWAY FROM ALL UNDERGROUND UTILITIES.
2. PROVIDE 3" LAYER OF BARK MULCH IN ALL PLANTING AREAS.
3. PROVIDE ROOT BARRIERS FOR TREES WITHIN 5' OF PAVING.

IRRIGATION LEGEND

△ TREE BUBBLERS, TWO PER TREE, TYP.

POC RECLAIMED WATER IRRIGATION SYSTEM POINT OF CONNECTION, REFER TO CIVIL PLANS AND NOTES BELOW

C SMART IRRIGATION CONTROLLER, PEDESTAL MOUNTED, MODEL TBD. PROVIDE 120V POWER

IRRIGATION NOTES

1. ALL PLANTING AREAS SHALL BE IRRIGATED TO COMPLY WITH STATE OF CALIFORNIA MODEL WATER EFFICIENT LANDSCAPE ORDINANCE (MWELO) REGULATIONS.
2. PROVIDE SELF-ADJUSTING WEATHER BASED IRRIGATION CONTROLLER IN A STAINLESS STEEL PEDESTAL ENCLOSURE
3. THE LOCALLY AVAILABLE MUNICIPAL RECLAIMED WATER IRRIGATION SYSTEM IS TO BE UTILIZED FOR THIS PROJECT. THE CONTRACTOR SHALL DESIGN THE SYSTEM TO MEET THE REQUIREMENTS OF LA COUNTY PUBLIC HEALTH AND THE WEST BASIN MUNICIPAL WATER DISTRICT FOR RECLAIMED WATER IRRIGATION SYSTEMS.

PAUL MURDOCH ARCHITECTS

6310 SAN VICENTE BLVD. SUITE 400
LOS ANGELES, CA 90048
T. 310 358-0993

THE DRAWINGS AND SPECIFICATIONS AND IDEAS, DESIGNS, AND ARRANGEMENTS REPRESENTED THEREBY ARE AND SHALL REMAIN THE PROPERTY OF THE ARCHITECT, AND NO PART THEREOF SHALL BE COPIED, DISCLOSED TO OTHERS, OR USED IN CONNECTION WITH ANY WORK OR PROJECT OTHER THAN THE SPECIFIC PROJECT FOR WHICH THEY HAVE BEEN PREPARED AND DEVELOPED WITHOUT THE WRITTEN CONSENT OF THE ARCHITECT. VISUAL CONTACT WITH THESE DRAWINGS OR SPECIFICATIONS SHALL CONSTITUTE CONCLUSIVE EVIDENCE OF ACCEPTANCE OF THESE RESTRICTIONS. WRITTEN DIMENSIONS ON THESE DRAWINGS SHALL HAVE PRECEDENCE OVER SCALED DIMENSIONS. CONTRACTORS SHALL VERIFY AND BE RESPONSIBLE FOR ALL DIMENSIONS AND CONDITIONS ON THE JOB AND THIS OFFICE MUST BE NOTIFIED OF ANY VARIATIONS FROM THE DIMENSIONS AND CONDITIONS SHOWN BY THESE DRAWINGS. SHOP DETAILS MUST BE SUBMITTED TO THIS OFFICE FOR REVIEW BEFORE PROCEEDING WITH FABRICATION.

PBQCo
PAMELA BURTON & COMPANY
LANDSCAPE ARCHITECTURE

1430 Olympic Boulevard
Santa Monica, CA 90404
310 828 6373 T
310 828 8054 F
www.pamelaburtonco.com

NO. DATE REVISION

allcove
BEACH CITIES HEALTH DISTRICT

100% PRELIMINARY DESIGN SUBMITTAL

PMA PROJECT NO.
23007

DRAWING TITLE
PLANTING PLAN

SCALE
AS SHOWN

DATE
02/28/2024

DRAWN BB
CHECKED DC,MSM

SHEET NO.
L200

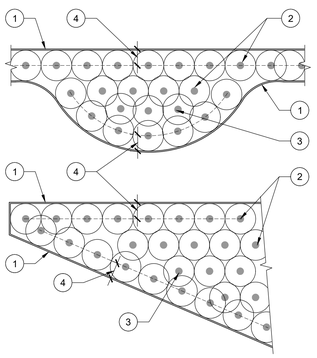

IRREGULAR AREA

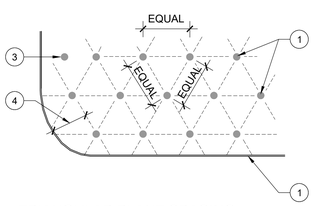

TRIANGULAR PLANT SPACING

1. EDGE OF PLANTING AREA: OUTER ROW OF PLANTS TO FOLLOW EDGE OF PAVING, HEADER, VERTICAL PLANE, OR ADJACENT PLANT SPECIES
2. TYPICAL SHRUB OR GROUNDCOVER WITH TRIANGULAR SPACING UNLESS OTHERWISE NOTED ON PLANS; SEE PLANT SCHEDULE FOR TRIANGULAR (O.C.) SPACING
3. INFILL PLANT AS REQUIRED TO MAINTAIN SPACING AT IRREGULAR EDGES
4. AS SHOWN ON PLANS OR HALF THE DISTANCE OF THE O.C. SPACING

NOTES:
- ALL GROUNDCOVER SHALL BE PLANTED AT EQUAL SPACING

14 SHRUB AND GROUNDCOVER SPACING — NOT TO SCALE

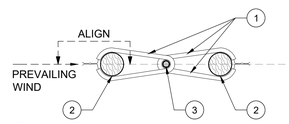

PLAN VIEW

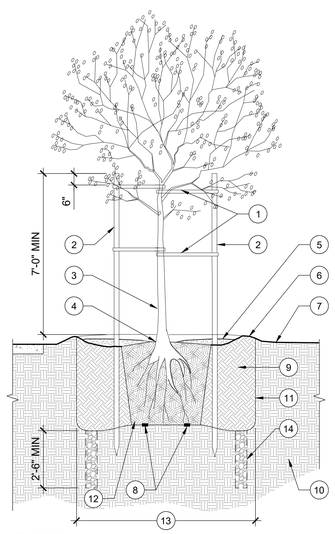

SECTION

1. FLEXIBLE TWIST BRACES, ENCASED IN HOSE SECTIONS WHERE IN CONTACT WITH TREE TRUNK. ALLOW ENOUGH SLACK TO AVOID RIGID RESTRAINT OF TREE. MIN 12" APART.
2. WOOD TREE STAKES SET OUTSIDE OF ROOTBALL; DRIVE STAKES 12" MIN INTO UNDISTURBED SOIL; INSTALL STAKES IN LINE WITH PREVAILING WIND
3. TREE TRUNK
4. SET CROWN OF ROOTBALL 2" ABOVE FINISH GRADE
5. 3" MIN MULCH LAYER, KEEP 3" AWAY FROM TRUNK
6. BERM SOIL 3" TO FORM WATERING BASIN
7. FINISH GRADE
8. MYCORRHIZAL FUNGI PACKETS PER PLANTING SPECS
9. BACKFILL PLANT PIT W/ AMENDED BACKFILL PER SOILS TEST AND SPECS
10. UNDISTURBED OR RECOMPACTED SOIL
11. SCARIFY SIDES OF PIT
12. SET ROOTBALL ON UNDISTURBED OR RECOMPACTED SOIL; RAISE CENTER AREA FOR DRAINAGE
13. DIG PLANTING PIT TO BE 2X THE WIDTH OF ROOTBALL
14. SUMP HOLES FILLED WITH GRAVEL TO PENETRATE IMPERVIOUS SOIL IF REQUIRED FOR ADEQUATE PERCOLATION OF PLANTING; (2) SUMP HOLES PER PLANTING PIT

10 TREE PLANTING — NOT TO SCALE

AQUALINA PAVING STONES
BY ANGELUS PAVING STONES

Typical PICP System

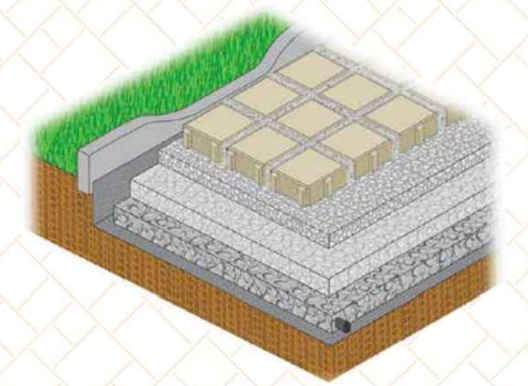

- *Pavers conform to ASTM C936. Installation by hand or machine*
- *Open-graded crushed stone recommended for all aggregates*
- *Edge restraint-concrete curbs*
- *Joint filling stone gradation: ASTM No. 8, 89, or 9*
- *100% permeable surface*
- *Bedding gradation: ASTM No. 8*
- *Base gradation: ASTM No. 57*
- *Subbase gradation: ASTM No. 2, 3 or 4*
- *Optional geotextile: consult manufacturers for selection*
- *Under Drain as required*
- *Soil subgrade: classified per ASTM D2487; tested for permeability per ASTM D3385*

5 PERMEABLE PAVER (BASIS OF DESIGN) — SCALE

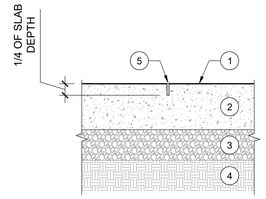

SAW CUT JOINT

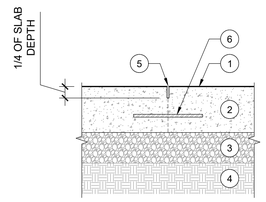

CONSTRUCTION JOINT

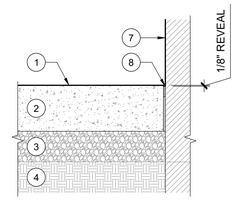

ISOLATION/EXPANSION JOINT

1. CONCRETE FINISH PER PLANS
2. CONCRETE THICKNESS AND REINFORCING PER CIVIL
3. CRUSHED AGGREGATE BASE CIVIL
4. COMPACTED SUBGRADE PER CIVIL
5. 3/16" WIDE SAWCUT JOINT, SPACED PER PLANS
6. SMOOTH STAINLESS STEEL DOWEL PER CIVIL
7. VERTICAL FACE OF BUILDING OR CURB
8. 1/4" WIDE EXPANSION FOAM WITH CAULKING PER SPECIFICATIONS

NOTES:
- TOP SURFACES TO BE CO-PLANAR, TYP.
- EXPANSION JOINTS SHOWN ON PLANS TO COMMUNICATE DESIGN INTENT ONLY. CONTRACTOR TO CONFIRM LAYOUT IN THE FIELD BASED ON INDUSTRY STANDARDS & REVIEW WITH LANDSCAPE ARCHITECT.
- PROVIDE EXPANSION JOINTS (OMIT DOWELS) WHERE CONCRETE PAVING ABUTS WALLS, BUILDINGS, CURBS, STEPS, & RAMPS.
- ALL PAVING SCORELINES SHALL BE SAWCUT

2 CONCRETE PAVING JOINTS — 1 1/2" = 1'-0"

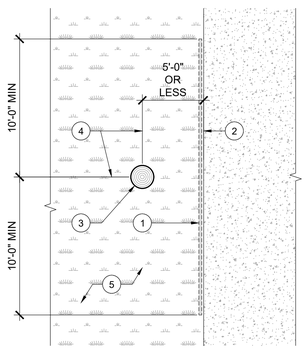

1. CONTINUOUS ROOT BARRIER AT EDGE OF HARDSCAPE PER SPECIFICATIONS; 24" DEPTH MINIMUM
2. EDGE OF HARDSCAPE PER PLANS
3. TREE TRUNK
4. CENTERLINE OF TREE TRUNK
5. PLANTING AREA PER PLANS

13 TYPICAL ROOT BARRIER (PLAN VIEW) — NOT TO SCALE

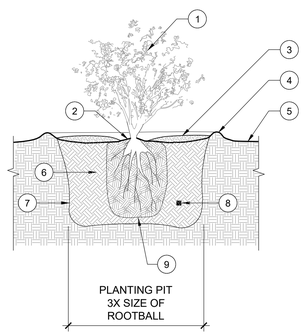

1. SHRUB PER PLANS
2. SET CROWN OF ROOTBALL 1" ABOVE FINISH GRADE
3. SPREAD 3" MIN DEPTH MULCH LAYER AROUND PLANT, KEEP 3" AWAY FROM TRUNK
4. BERM SOIL 3" TO FORM WATERING BASIN
5. FINISH GRADE
6. PREPARED BACKFILL MIX, AMENDED PER PLANTING NOTES
7. SCARIFY SIDES AND BOTTOM OF PLANTING PIT
8. PLANT TABLET WITH MYCORRHIZAL FUNGI PER SPECS
9. MOUND SOIL FOR ROOTBALL REST

9 SHRUB PLANTING — NOT TO SCALE

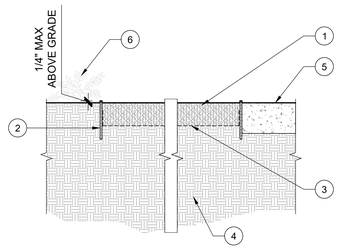

1. 3" LAYER OF GRAVEL, LOCATION PER PLANS, COLOR PER PLAN
2. STEEL HEADER PER PLANS
3. FILTER FABRIC WEED BARRIER
4. COMPACTED SUBGRADE
5. ADJACENT CONCRETE PAVING PER PLANS
6. PLANTING AREA PER PLANS

1 GRAVEL MULCH — 1 1/2" = 1'-0"

PAUL MURDOCH ARCHITECTS

6310 SAN VICENTE BLVD. SUITE 400
LOS ANGELES, CA 90048
T. 310 358-0993

THE DRAWINGS AND SPECIFICATIONS AND IDEAS, DESIGNS, AND ARRANGEMENTS REPRESENTED THEREBY ARE AND SHALL REMAIN THE PROPERTY OF THE ARCHITECT, AND NO PART THEREOF SHALL BE COPIED, DISCLOSED TO OTHERS, OR USED IN CONNECTION WITH ANY WORK OR PROJECT OTHER THAN THE SPECIFIC PROJECT FOR WHICH THEY HAVE BEEN PREPARED AND DEVELOPED WITHOUT THE WRITTEN CONSENT OF THE ARCHITECT. VISUAL CONTACT WITH THESE DRAWINGS OR SPECIFICATIONS SHALL CONSTITUTE CONCLUSIVE EVIDENCE OF ACCEPTANCE OF THESE RESTRICTIONS. WRITTEN DIMENSIONS ON THESE DRAWINGS SHALL HAVE PRECEDENCE OVER SCALED DIMENSIONS. CONTRACTORS SHALL VERIFY AND BE RESPONSIBLE FOR ALL DIMENSIONS AND CONDITIONS ON THE JOB AND THIS OFFICE MUST BE NOTIFIED OF ANY VARIATIONS FROM THE DIMENSIONS AND CONDITIONS SHOWN BY THESE DRAWINGS. SHOP DETAILS MUST BE SUBMITTED TO THIS OFFICE FOR REVIEW BEFORE PROCEEDING WITH FABRICATION.

PBCo
PAMELA BURTON & COMPANY
LANDSCAPE ARCHITECTURE

1430 Olympic Boulevard
Santa Monica, CA 90404
310 828 6373 T
310 828 8054 F
www.pamelaburtonco.com

NO.	DATE	REVISION

allcove
BEACH CITIES HEALTH DISTRICT

100% PRELIMINARY DESIGN SUBMITTAL

PMA PROJECT NO.
23007

DRAWING TITLE
LANDSCAPE DETAILS

SCALE
AS SHOWN

DATE
02/28/2024

DRAWN: BB
CHECKED: DC,MSM

SHEET NO.
L300

CAMPUS SITE PLAN (1)
SCALE: 1" = 40'

GENERAL NOTES

1. REFER TO A101 FOR NOTES.

PAUL MURDOCH
ARCHITECTS

6310 SAN VICENTE BLVD. SUITE 400
LOS ANGELES, CA 90048
T. 310 358-0993

THE DRAWINGS AND SPECIFICATIONS AND IDEAS, DESIGNS, AND ARRANGEMENTS REPRESENTED THEREBY ARE AND SHALL REMAIN THE PROPERTY OF THE ARCHITECT AND NO PART THEREOF SHALL BE COPIED, DISCLOSED TO OTHERS, OR USED IN CONNECTION WITH ANY WORK OR PROJECT OTHER THAN THE SPECIFIC PROJECT FOR WHICH THEY HAVE BEEN PREPARED AND DEVELOPED WITHOUT THE WRITTEN CONSENT OF THE ARCHITECT. VISUAL CONTACT WITH THESE DRAWINGS OR SPECIFICATIONS SHALL CONSTITUTE CONCLUSIVE EVIDENCE OF ACCEPTANCE OF THESE RESTRICTIONS. WRITTEN DIMENSIONS ON THESE DRAWINGS SHALL HAVE PRECEDENCE OVER SCALED DIMENSIONS. CONTRACTORS SHALL VERIFY AND BE RESPONSIBLE FOR ALL DIMENSIONS AND CONDITIONS ON THE JOB AND THIS OFFICE MUST BE NOTIFIED OF ANY VARIATIONS FROM THE DIMENSIONS AND CONDITIONS SHOWN BY THESE DRAWINGS. SHOP DETAILS MUST BE SUBMITTED TO THIS OFFICE FOR REVIEW BEFORE PROCEEDING WITH FABRICATION.

NO. DATE REVISION

allcove
BEACH CITIES
HEALTH DISTRICT

100% PRELIMINARY DESIGN SUBMITTAL

PMA PROJECT NO.
23007

DRAWING TITLE
BCHD CAMPUS
SITE PLAN

SCALE
1" = 40'-0"

DATE
02/28/2024

DRAWN E.C.
CHECKED P.M.

SHEET NO.
A100

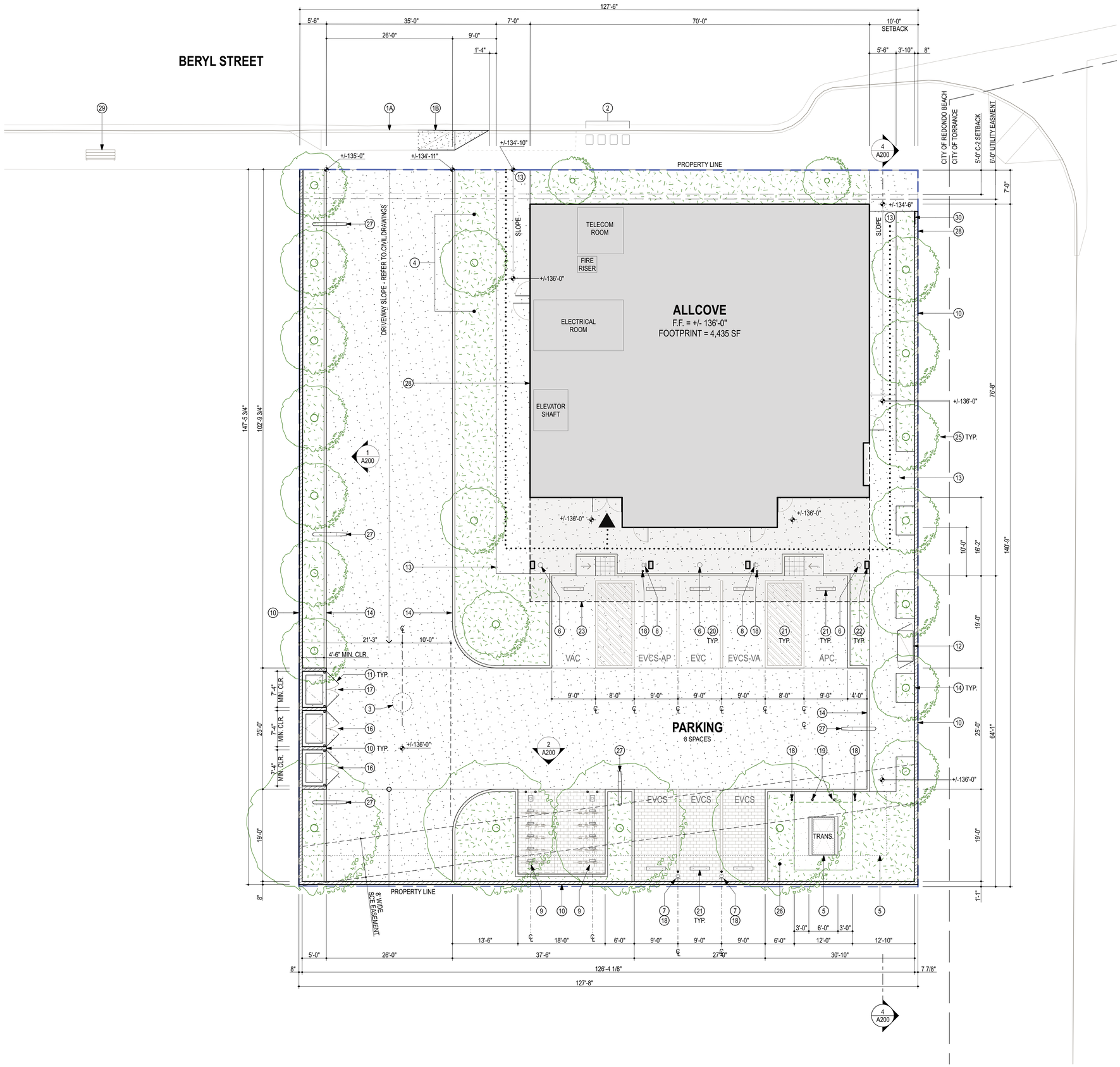

SYMBOL LEGEND

- PLANTED AREA. REFER TO LANDSCAPE DWGS.
- CONC. PAVING REFER TO CIVIL + LANDSCAPE DWGS.
- PERMEABLE PAVERS REFER TO CIVIL + LANDSCAPE DWGS.
- BUILDING FOOTPRINT
- DETECTABLE WARNING STRIP
- SITE WALL / RETAINING WALL REFER TO CIVIL + STRUCT. DWGS.
- P.O.T. - PATH OF TRAVEL W/ ACCESSIBLE PATH TO THE PUBLIC RIGHT OF WAY

KEYNOTE LEGEND

1A (E) CURB CUT.

1B CURB CUT EXTENSION. REFER TO CIVIL DWGS.

2 METER / SERVICE CONNECTION. REFER TO CIVIL DWGS.

3 (E) OIL WELL CAPPED BELOW GRADE TO REMAIN.

4 UTILITY RISERS AT PLANTER AREA. REFER TO CIVIL AND LANDSCAPE DWGS.

5 ELEC. TRANSFORMER W/ CONC. VAULT. REFER TO ELEC. DWGS.

6 EV READY CHARGER BOX REFER TO ELEC. DWGS.

7 WALL MTD. ELECTRIC VEHICLE CHANGING EQUIPMENT. REFER TO ELEC. DWGS.

8 PEDESTAL ELECTRICAL VEHICLE CHANGING EQUIP. W/ BOLLARD. REFER TO ELEC. DWGS.

9 AUTOMATED BIKE PARKING SYSTEM W/ E-BIKE CHARGING. REFER TO ELEC. DWGS.

10 CONCRETE SITE RETAINING WALL / SITE WALL W/ FIN. + SEAL REFER TO A200, STRUCT. + CIVIL DWGS.

11 PTD. STEEL LOUVERED SWING GATES SECURED TO PTD. STL POST OR CONC. WALL

12 SLAB MTD. BICYCLE LOCKER

13 CONC. SLOPED WALKWAY. 1:20 MAX SLOPE. REFER TO CIVIL DWGS.

14 CURB. REFER TO CIVIL DWGS.

15 PLANTER AREA. REFER TO LANDSCAPE DWGS.

16 3 CUBIC YARD TRASH DUMPSTER W/ IN 72" HIGH TRASH ENCLOSURE.

17 3 CUBIC YARD RECYCLING DUMPSTER W/ IN 72" HIGH TRASH ENCLOSURE.

18 48' H. PTD. STL. BOLLARD

19 48' H. PTD. STL. REMOVABLE BOLLARD

20 9'-0" WIDE BY 19' DEEP PARKING STALLS W/ WHEEL STOP REFER TO PARKING STALL TYPES + G003 FOR PARKING TABLE.

21 8'-0" WIDE BY 19' DEEP ADA ACCESSIBLE AISLE

22 BUILDING COLUMN. REFER TO A111

23 BUILDING OVERHANG ABOVE. REFER TO A111

24 30" X 48" CLEAR AREA

25 TREE. REFER TO LANDSCAPE DWGS.

26 IRRIGATION CONTROLS. REFER TO LANDSCAPE DWGS.

27 LIGHT POLE. REFER TO ELEC. DWGS.

28 BUILDING IDENTIFICATION SIGNAGE

29 BUS STOP LOCATION SHOWN FOR REFERENCE

30 PTD. AL. SIGN MONUMENT ON CONC BASE

PARKING STALL TYPES

REFER TO G003 FOR TABLE

AP	ACCESSIBLE PARKING SPACES
VA	VAN ADA ACCESSIBLE PARKING SPACES
EVC	ELECTRIC VEHICLE CAPABLE PARKING SPACES
EVCS	ELECTRIC VEHICLE CHARGING STATIONS
EVCS-AP	EV CHARGING STATION ADA ACCESSIBLE SPACES
EVCS-VA	EV CHARGING STATION ADA VAN ACCESSIBLE SPACES

GENERAL NOTES

1. PROJECT ZERO NOTED AS EL. 0'-0" EQUALS 136.00' U.N.O.
2. REFER TO CIVIL DWGS.REFER TO CIVIL DWGS. FOR OFF-SITE WORK REQUIRED IN PUBLIC WAY.
3. REFER TO CIVIL DWGS. FOR SITE DEMOLITION, UTILITIES, GRADING INFO., FOR FIRE HYDRANT LOCATIONS, POST INDICATOR VALVE LOCATIONS, FIRE DEPARTMENT CONNECTION AND FIRE SPRINKLER RISER & LOCATION OF SITE AND BUILDING ELEMENTS.
4. REFER TO CIVIL + LANDSCAPE DWGS. FOR HARDSCAPE.
5. REFER TO LANDSCAPE AND IRRIGATION DWGS. FOR NEW + (E) LANDSCAPE INFO, FOR PLANT PROTECTION.

SITE PLAN (1)
SCALE: 1/8" = 1'-0"

2' 8' 32'

PLAN NORTH N

PAUL MURDOCH ARCHITECTS

6310 SAN VICENTE BLVD. SUITE 400
LOS ANGELES, CA 90048
T. 310 358-0993

THE DRAWINGS AND SPECIFICATIONS AND IDEAS, DESIGNS, AND ARRANGEMENTS REPRESENTED THEREBY ARE AND SHALL REMAIN THE PROPERTY OF THE ARCHITECT AND NO PART THEREOF SHALL BE COPIED, DISCLOSED TO OTHERS, OR USED IN CONNECTION WITH ANY WORK OR PROJECT OTHER THAN THE SPECIFIC PROJECT FOR WHICH THEY HAVE BEEN PREPARED AND DEVELOPED WITHOUT THE WRITTEN CONSENT OF THE ARCHITECT. VISUAL CONTACT WITH THESE DRAWINGS OR SPECIFICATIONS SHALL CONSTITUTE CONCLUSIVE EVIDENCE OF ACCEPTANCE OF THESE RESTRICTIONS. WRITTEN DIMENSIONS ON THESE DRAWINGS SHALL HAVE PRECEDENCE OVER SCALED DIMENSIONS. CONTRACTORS SHALL VERIFY AND BE RESPONSIBLE FOR ALL DIMENSIONS AND CONDITIONS ON THE JOB AND THIS OFFICE MUST BE NOTIFIED OF ANY VARIATIONS FROM THE DIMENSIONS AND CONDITIONS SHOWN BY THESE DRAWINGS. SHOP DETAILS MUST BE SUBMITTED TO THIS OFFICE FOR REVIEW BEFORE PROCEEDING WITH FABRICATION.

NO.	DATE	REVISION

allcove
BEACH CITIES HEALTH DISTRICT

100% PRELIMINARY DESIGN SUBMITTAL

PMA PROJECT NO.
23007

DRAWING TITLE
SITE PLAN

SCALE
1/8" = 1'-0"

DATE
02/28/2024

DRAWN E.C. CHECKED P.M.

SHEET NO.
A101

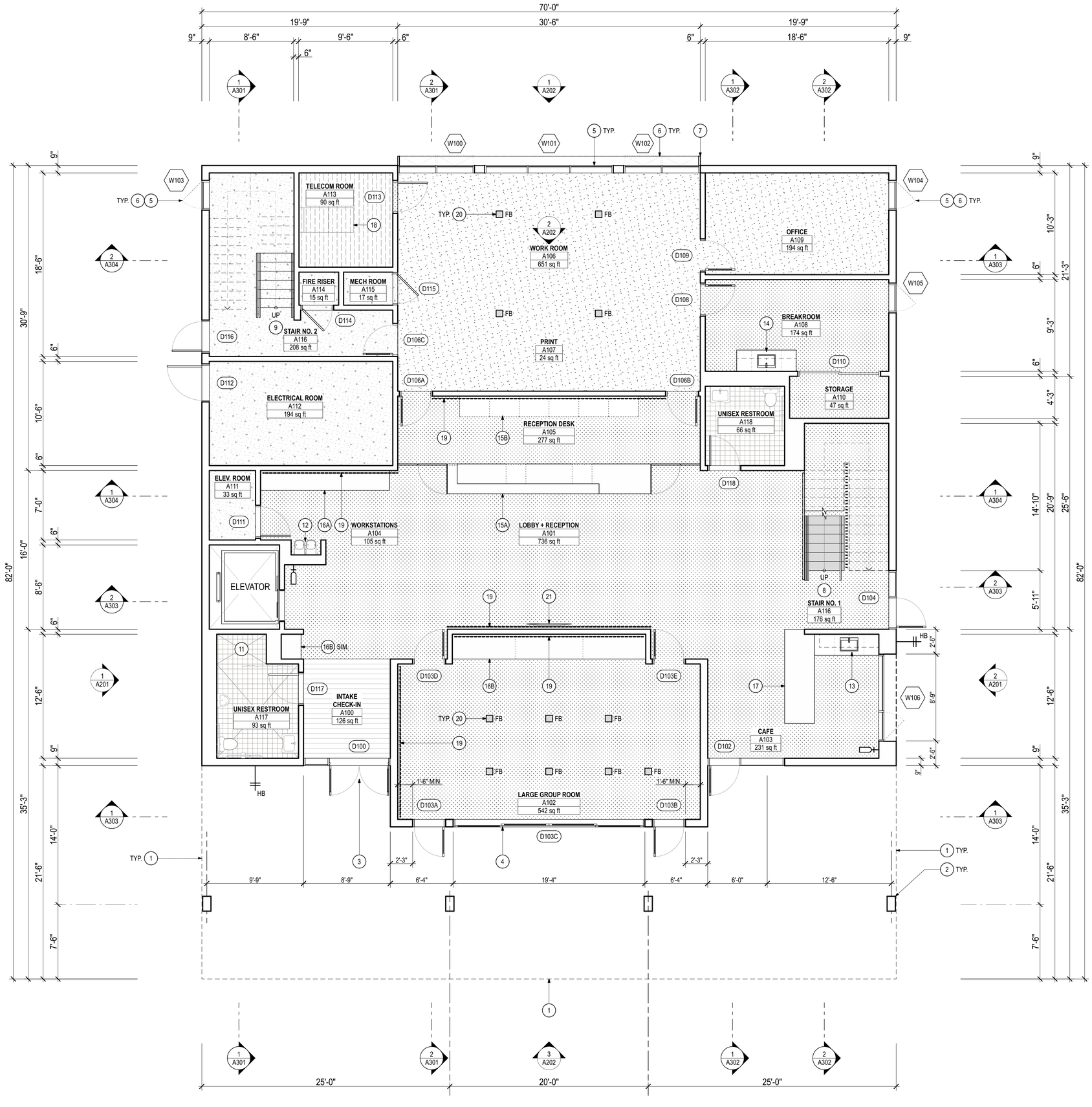

SYMBOL LEGEND

- PROFILE OF BUILDING ABV.
- ACOUSTICAL WALL COVERING
- SEALED CONCRETE FLOOR FINISH
- CONCRETE FLOOR WITH STATIC CONTROL EPOXY FLOORING
- CARPET TILE FLOOR FINISH
- LUXURY VINYL TILE (LVT) FLOOR FINISH
- RUBBER FLOOR FINISH AT STAIR NO. 1
- QUARRY TILE SLOPE MAX 2% TO DRAIN
- RECESSED ENTRANCE FLOOR GRILLE
- RECESSED FIRE EXTINGUISHER CABINET
- HB HOSE BIB. REFER TO PLUMB. DWGS.

KEYNOTE LEGEND

1. PROFILE OF BLDG. ABV.
2. STL. COLUMN W/ METAL COLUMN COVER.
3. PTD. ALUM./GLASS POWER ASSIST ENTRY DOORS
4. PTD. ALUM./GLASS 4 PANEL SLIDING DOOR
5. PTD. ALUM./GLASS CURTAINWALL WINDOW SYSTEM
6. PTD. ALUM. OPERABLE WINDOW AT CURTAINWALL SYSTEM
7. EXTENDED COVER CAP AT CURTAINWALL SYSTEM.
8. STAIR #1 - STEEL STAIR W/ CONC. FILL STEEL TREADS W/ RUBBER FINISH
9. STAIR #2 - STEEL STAIR W/ CONC. FILL STEEL TREADS
10. NOT USED.
11. ACCESSIBLE SHOWER. REFER TO PLUMB. DWGS.
12. DRINKING FOUNTAIN AND BOTTLE FILLER.
13. SERVICE SINK AT CAFE. REFER TO PLUMB. DWGS.
14. BREAKROOM CASEWORK W/ UNDERMOUNT SINK. REFER TO PLUMB. DWGS. + **6/A501**
15A. RECEPTION DESK. REFER TO **2/A501**
15B. RECEPTION STORAGE CONSOLE. REFER TO **1/A501**
16A. WORKSTATION COUNTERTOP AT LOBBY. REFER TO **3/A501**
16B. WORKSTATION COUNTERTOP AT LARGE GROUP ROOM REFER TO **4/A501**
17. CAFE WORK AND SEVICE COUNTER. REFER TO **5/A501**
18. SERVER RACK. REFER TO ELEC. DWGS.
19. 66" HIGH ACOUSTICAL WALL PANEL FINISH. LENGTH SET TO ALIGN WITH WALL EDGE. BOTTOM SET TO 42" A.F.F.
20. FLOOR BOX. REFER TO ELEC. + IT DWGS.
21. WALL MOUNTED FLAT PANEL DISPLAY W/ RECESSED WALL AV BOX. REFER TO ELEC. + IT DWGS.

GENERAL NOTES

1. DIMENSIONS ARE TO FACE OF WALL FINISH U.N.O.
2. PROJECT ZERO NOTED AS EL. 0'-0" EQUALS 136.00'. REFER TO CIVIL DWGS.
3. PROVIDE WALL MOUNTED HAND DRYERS AND ACCESSORIES AT RESTROOMS. REFER TO SPECIFICATIONS.
4. ALL STAIRS TO HAVE PAINTED STEEL RISERS WITH CONCRETE INFILL AT TREAD PAN U.N.O.
5. PROVIDE BELOW SLAB VAPOR BARRIER W/ SEALED PENETRATIONS IF REQUIRED PER THE OWNER'S SOIL MANAGEMENT PLAN.

PLAN NORTH

1' 4' 16'

FIRST FLOOR PLAN (1)
SCALE: 1/4" = 1'-0"

PAUL MURDOCH ARCHITECTS

6310 SAN VICENTE BLVD. SUITE 400
LOS ANGELES, CA 90048
T. 310 358-0993

THE DRAWINGS AND SPECIFICATIONS AND IDEAS, DESIGNS, AND ARRANGEMENTS REPRESENTED THEREBY ARE AND SHALL REMAIN THE PROPERTY OF THE ARCHITECT AND NO PART THEREOF SHALL BE COPIED, DISCLOSED TO OTHERS, OR USED IN CONNECTION WITH ANY WORK OR PROJECT OTHER THAN THE SPECIFIC PROJECT FOR WHICH THEY HAVE BEEN PREPARED AND DEVELOPED WITHOUT THE WRITTEN CONSENT OF THE ARCHITECT. VISUAL CONTACT WITH THESE DRAWINGS OR SPECIFICATIONS SHALL CONSTITUTE CONCLUSIVE EVIDENCE OF ACCEPTANCE OF THESE RESTRCTIONS. WRITTEN DIMENSIONS ON THESE DRAWINGS SHALL HAVE PRECEDENCE OVER SCALED DIMENSIONS. CONTRACTORS SHALL VERIFY AND BE RESPONSIBLE FOR ALL DIMENSIONS AND CONDITIONS ON THE JOB AND THIS OFFICE MUST BE NOTIFIED OF ANY VARIATIONS FROM THE DIMENSIONS AND CONDITIONS SHOWN BY THESE DRAWINGS. SHOP DETAILS MUST BE SUBMITTED TO THIS OFFICE FOR REVIEW BEFORE PROCEEDING WITH FABRICATION.

NO.	DATE	REVISION

allcove
BEACH CITIES HEALTH DISTRICT

100% PRELIMINARY DESIGN SUBMITTAL

PMA PROJECT NO.
23007

DRAWING TITLE
FIRST FLOOR PLAN

SCALE
1/4" = 1'-0"

DATE
02/28/2024

DRAWN E.C. CHECKED P.M.

SHEET NO.
A111

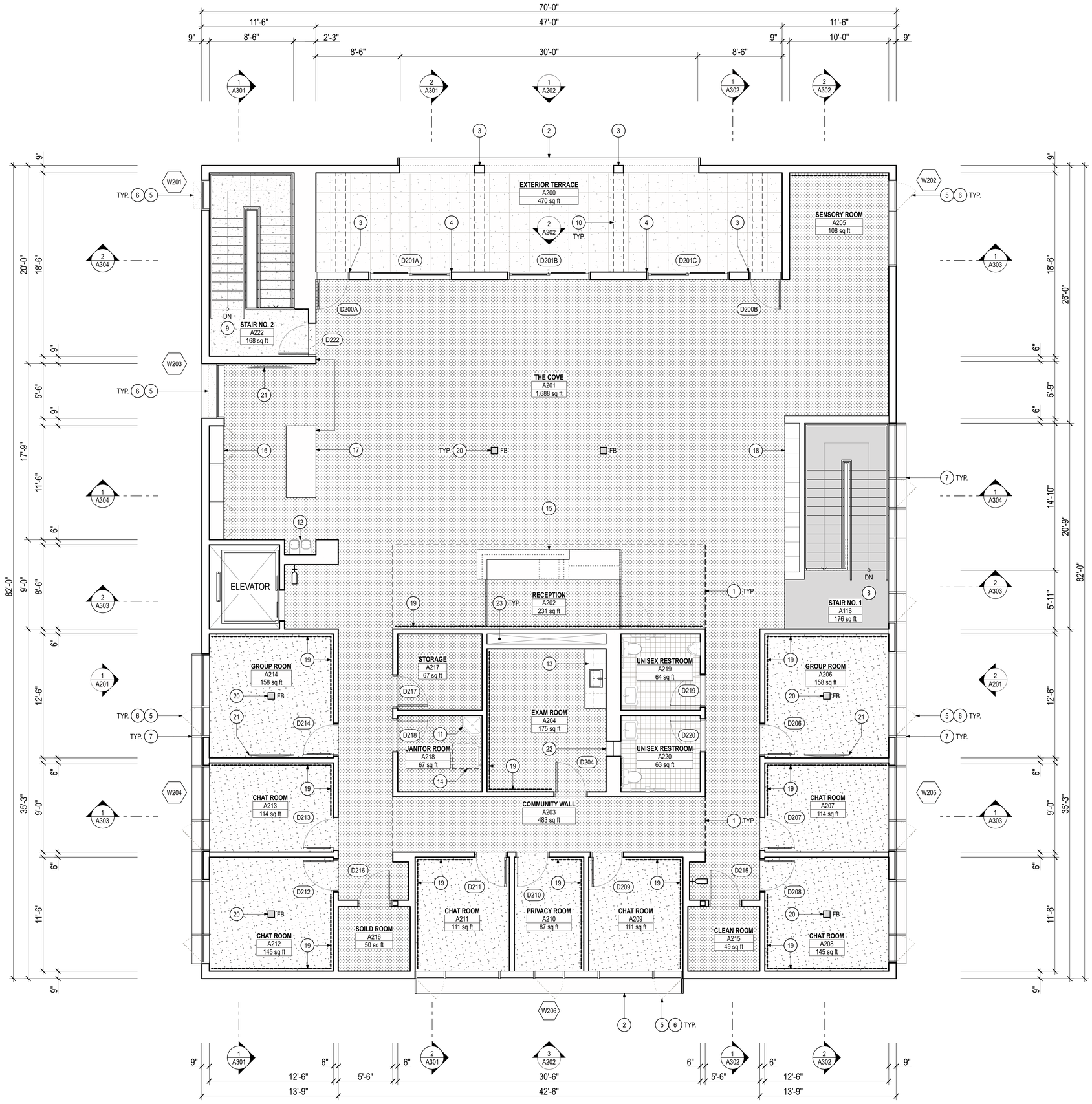

SYMBOL LEGEND

- PROFILE OF BUILDING ABV.
- ACOUSTICAL WALL COVERING
- SEALED CONCRETE FLOOR FINISH
- CARPET TILE FLOOR FINISH
- LUXURY VINYL TILE (LVT) FLOOR FINISH
- RUBBER FLOOR FINISH AT STAIR NO. 1
- QUARRY TILE SLOPE MAX 2% TO DRAIN
- PEDESTAL PAVER SYSTEM
- RECESSED FIRE EXTINGUISHER CABINET
- HB HOSE BIB. REFER TO PLUMB. DWGS.

KEYNOTE LEGEND

1. PROFILE OF SKYLIGHT ABOVE
2. PTD. ALUM. FRAME AT OPENING.
3. STL. COLUMN COVERS
4. PTD. ALUM./GLASS 2 PANEL SLIDING DOOR
5. PTD. ALUM./GLASS CURTAINWALL WINDOW SYSTEM
6. PTD. ALUM. OPERABLE WINDOW AT CURTAINWALL SYSTEM
7. EXTENDED COVER CAP AT CURTAINWALL SYSTEM.
8. STAIR #1 - STEEL STAIR W/ CONC. FILL STEEL TREADS W/ RUBBER FINISH
9. STAIR #2 - STEEL STAIR W/ CONC. FILL STEEL TREADS
10. PROFILE OF BEAM ENCLOSURE ABOVE
11. FLOOR SINK. REFER TO PLUMB. DWGS.
12. DRINKING FOUNTAIN AND BOTTLE FILLER REFER TO PLUMB. DWGS.
13. EXAM ROOM CASEWORK W/ UNDERMOUNT SINK. REFER TO PLUMB. DWGS. + **5/A502**
14. ROOF LADDER W/ ACCESS TO MECHANICAL WELL
15. RECEPTION DESK. REFER TO **2/A502**
16. SNACK STATION CABINETS. REFER TO **3/A502**
17. SNACK STATION ISLAND. REFER TO **4/A502**
18. STORAGE CUBBIES BELOW GUARDRAIL WALL. REFER TO **1/A502**
19. 66" HIGH ACOUSTICAL WALL PANEL FINISH. LEGNTH SET TO ALIGN WITH WALL EDGE. BOTTOM SET TO 42" A.F.F.
20. FLOOR BOX. REFER TO ELEC. + IT DWGS.
21. WALL MOUNTED FLAT PANEL DISPLAY W/ RECESSED WALL AV BOX. REFER TO ELEC. + IT DWGS.
22. RECESSED PASS-THRU CABINET.
23. MECHANICAL + PLUMB. SHAFT.

GENERAL NOTES

1. DIMENSIONS ARE TO FACE OF WALL FINISH U.N.O.
2. PROJECT ZERO NOTED AS EL. 0'-0" EQUALS 136.00'. REFER TO CIVIL DWGS.
3. PROVIDE WALL MOUNTED HAND DRYERS AND ACCESSORIES AT RESTROOMS. REFER TO SPECIFICATIONS.
4. ALL STAIRS TO HAVE PAINTED STEEL RISERS WITH CONCRETE INFILL AT TREAD PAN U.N.O.

PLAN NORTH N

1' 4' 16'

PAUL MURDOCH ARCHITECTS

6310 SAN VICENTE BLVD. SUITE 400
LOS ANGELES, CA 90048
T. 310 358-0993

THE DRAWINGS AND SPECIFICATIONS AND IDEAS, DESIGNS, AND ARRANGEMENTS REPRESENTED THEREBY ARE AND SHALL REMAIN THE PROPERTY OF THE ARCHITECT AND NO PART THEREOF SHALL BE COPIED, DISCLOSED TO OTHERS, OR USED IN CONNECTION WITH ANY WORK OR PROJECT OTHER THAN THE SPECIFIC PROJECT FOR WHICH THEY HAVE BEEN PREPARED AND DEVELOPED WITHOUT THE WRITTEN CONSENT OF THE ARCHITECT. VISUAL CONTACT WITH THESE DRAWINGS OR SPECIFICATIONS SHALL CONSTITUTE CONCLUSIVE EVIDENCE OF ACCEPTANCE OF THESE RESTRICTIONS. WRITTEN DIMENSIONS ON THESE DRAWINGS SHALL HAVE PRECEDENCE OVER SCALED DIMENSIONS. CONTRACTORS SHALL VERIFY AND BE RESPONSIBLE FOR ALL DIMENSIONS AND CONDITIONS ON THE JOB AND THIS OFFICE MUST BE NOTIFIED OF ANY VARIATIONS FROM THE DIMENSIONS AND CONDITIONS SHOWN BY THESE DRAWINGS. SHOP DETAILS MUST BE SUBMITTED TO THIS OFFICE FOR REVIEW BEFORE PROCEEDING WITH FABRICATION.

NO. DATE REVISION

allcove
BEACH CITIES HEALTH DISTRICT

100% PRELIMINARY DESIGN SUBMITTAL

PMA PROJECT NO.
23007

DRAWING TITLE
SECOND FLOOR PLAN

SCALE
1/4" = 1'-0"

DATE
02/28/2024

DRAWN E.C. CHECKED P.M.

SHEET NO.
A112

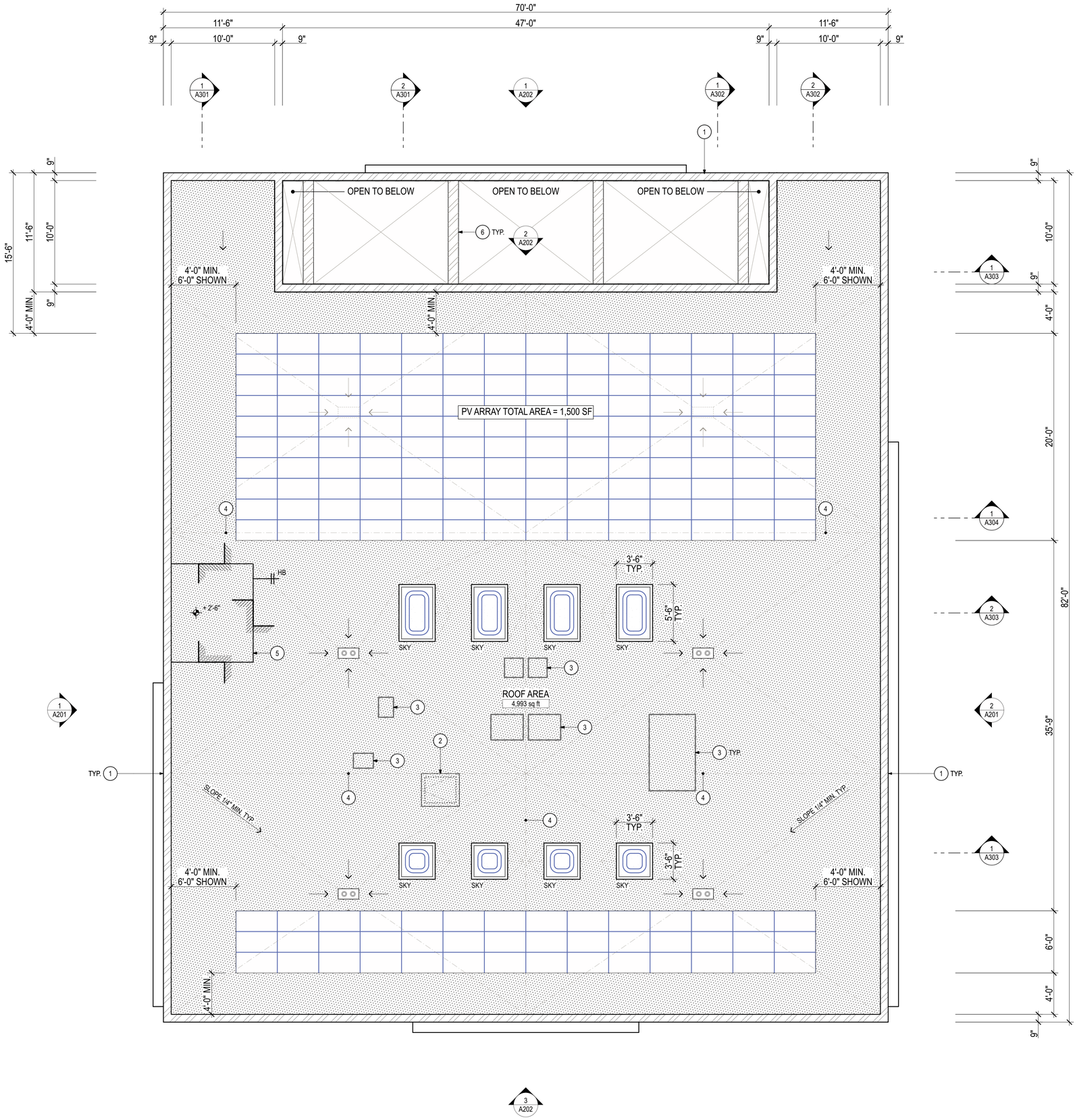

SYMBOL LEGEND

- CLASS A SINGLE PLY ROOFING MEMBRANE W/ MIN. 1/4" PER FOOT SLOPE
- PHOTOVOLTAIC PANELS SECURED TO STRUCTURE BELOW
- PAINTED METAL COPING
- BUBBLE SKYLIGHT W/ CURB BASE
- SKY — ROOF DRAIN / OVERFLOW DRAIN COMBINATION REFER TO PLUMB. DWGS.
- HB — HOSE BIB. REFER TO PLUMB. DWGS.

KEYNOTE LEGEND

1. 42" H. MIN. PARAPET + PROFILE OF EXTERIOR FACE OF BLDG. BELOW
2. ROOF HATCH
3. MECHANICAL, PLUMBING AND ELECTRICAL EQUIPMENT. REFER TO MECH. PLUMB. AND ELEC. DWGS.
4. ROOF RIDGE
5. ELEVATOR ROOF ENCLOSURE
6. BEAM ENCLOSURE

GENERAL NOTES

1. DIMENSIONS ARE TO FACE OF WALL FINISH U.N.O.
2. PROJECT ZERO NOTED AS EL. 0'-0" EQUALS 136.00'. REFER TO CIVIL DWGS.

PLAN NORTH

1' 4' 16'

ROOF PLAN 1
SCALE: 1/4" = 1'-0"

PAUL MURDOCH ARCHITECTS

6310 SAN VICENTE BLVD. SUITE 400
LOS ANGELES, CA 90048
T. 310 358-0993

THE DRAWINGS AND SPECIFICATIONS AND IDEAS, DESIGNS, AND ARRANGEMENTS REPRESENTED THEREBY ARE AND SHALL REMAIN THE PROPERTY OF THE ARCHITECT AND NO PART THEREOF SHALL BE COPIED, DISCLOSED TO OTHERS, OR USED IN CONNECTION WITH ANY WORK OR PROJECT OTHER THAN THE SPECIFIC PROJECT FOR WHICH THEY HAVE BEEN PREPARED AND DEVELOPED WITHOUT THE WRITTEN CONSENT OF THE ARCHITECT. VISUAL CONTACT WITH THESE DRAWINGS OR SPECIFICATIONS SHALL CONSTITUTE CONCLUSIVE EVIDENCE OF ACCEPTANCE OF THESE RESTRICTIONS. WRITTEN DIMENSIONS ON THESE DRAWINGS SHALL HAVE PRECEDENCE OVER SCALED DIMENSIONS. CONTRACTORS SHALL VERIFY AND BE RESPONSIBLE FOR ALL DIMENSIONS AND CONDITIONS ON THE JOB AND THIS OFFICE MUST BE NOTIFIED OF ANY VARIATIONS FROM THE DIMENSIONS AND CONDITIONS SHOWN BY THESE DRAWINGS. SHOP DETAILS MUST BE SUBMITTED TO THIS OFFICE FOR REVIEW BEFORE PROCEEDING WITH FABRICATION.

NO.	DATE	REVISION

allcove
BEACH CITIES HEALTH DISTRICT

100% PRELIMINARY DESIGN SUBMITTAL

PMA PROJECT NO.
23007

DRAWING TITLE
ROOF PLAN

SCALE
1/4" = 1'-0"

DATE
02/28/2024

DRAWN E.C. CHECKED P.M.

SHEET NO.
A113

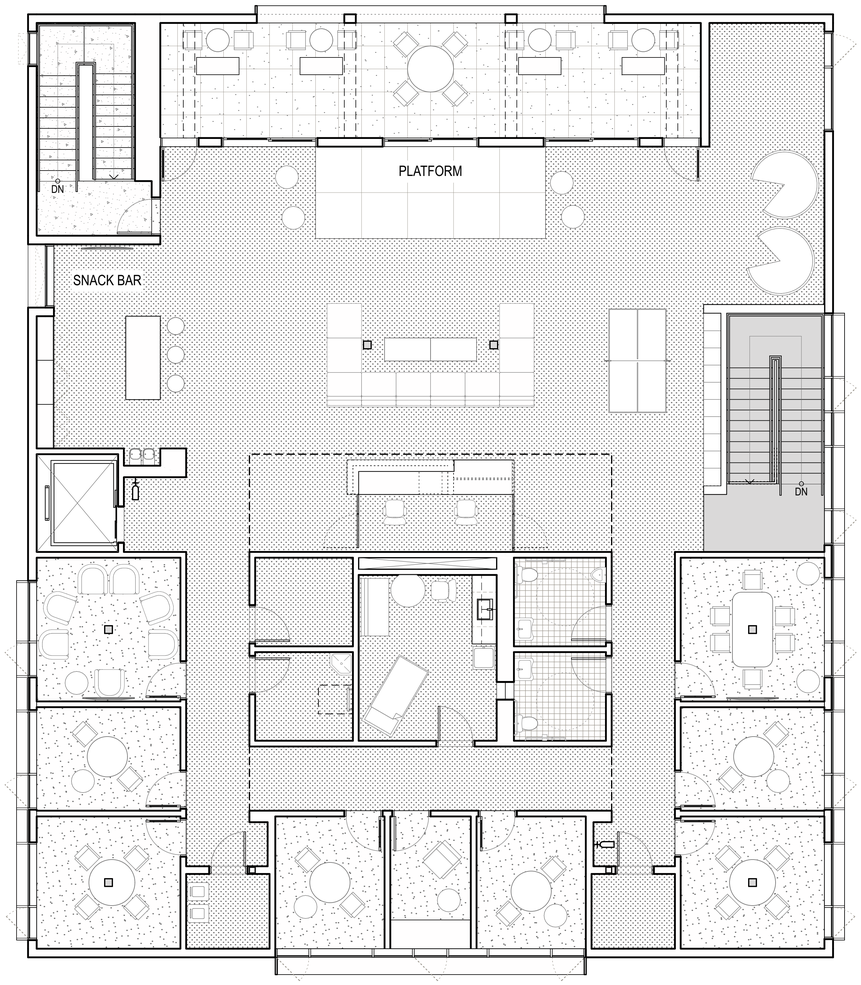

SECOND FLOOR FURNITURE FLOOR PLAN (2)
SCALE: 3/16" = 1'-0"

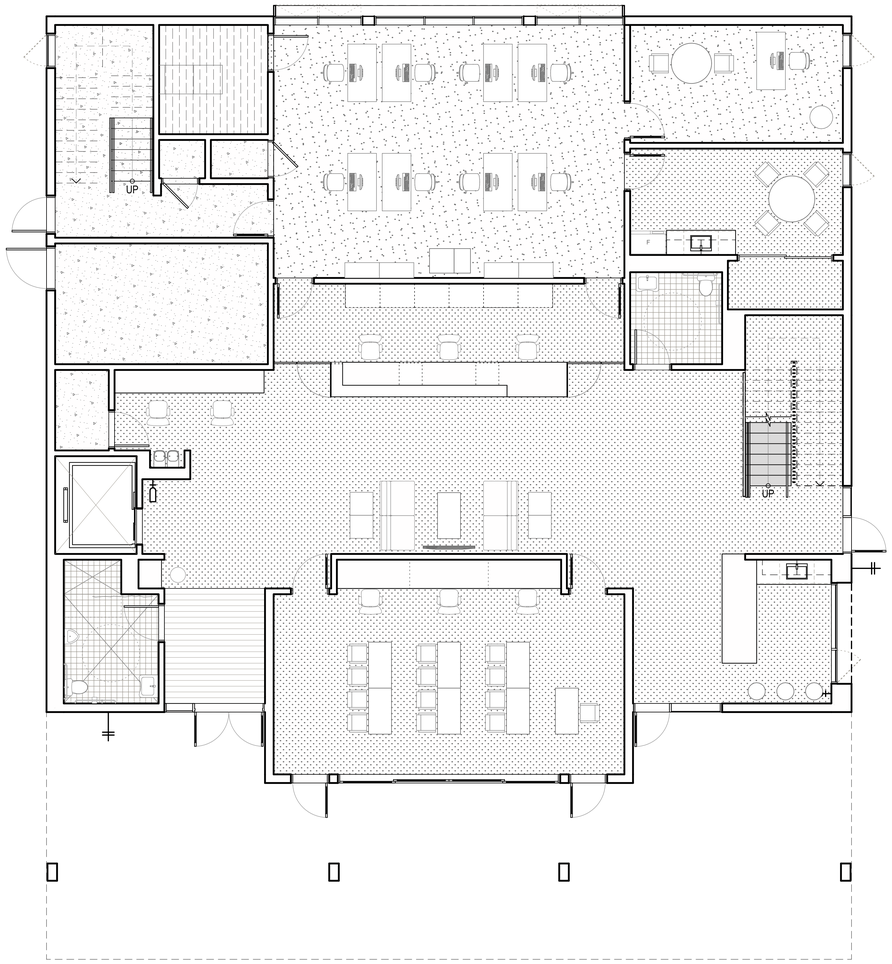

FIRST FLOOR FURNITURE FLOOR PLAN (1)
SCALE: 3/16" = 1'-0"

GENERAL NOTES

1. PROJECT ZERO NOTED AS EL. 0'-0" EQUALS +136.0'. REFER TO CIVIL DWGS.
2. FURNITURE + EQUIPMENT SHOWN ARE FOR REFERENCE ONLY. N.I.C.
3. IT IS PROPOSED TO PROVIDE 2A TYPE EXTINGUISHERS THROUGHOUT THE BUILDING. EACH FIRE EXTINGUISHER SHALL COVER A MAXIMUM 3,000 SF OF BUILDING AREA. A TOTAL OF 6 FIRE EXTINGUISHER SHALL BE PROVIDED WITHIN THE BUILDING GIVING A TOTAL COVERAGE OF 18,000 SF WHICH IS GREATER THAN THE ACTUAL BUILDING AREAOF15,664SF. WITHIN THE PUBLIC AREA A TOTAL OF 2 FIRE EXTINGUISHERS SHALL BE PROVIDED WHICH COVER A MAXIMUM OF 6,000 SF > 5,992 SF ACTUAL AREA. WITHIN THE STAFF AREA, A TOTAL OF 4 FIRE EXTINGUISHERS SHALL BE PROVIDED WHICH COVER A MAXIMUM OF 12,000 SF > 9,260 SF ACTUAL AREA.

1' 6' 24'

PLAN NORTH
N

PAUL MURDOCH ARCHITECTS

6310 SAN VICENTE BLVD. SUITE 400
LOS ANGELES, CA 90048
T. 310 358-0993

THE DRAWINGS AND SPECIFICATIONS AND IDEAS, DESIGNS, AND ARRANGEMENTS REPRESENTED THEREBY ARE AND SHALL REMAIN THE PROPERTY OF THE ARCHITECT AND NO PART THEREOF SHALL BE COPIED, DISCLOSED TO OTHERS, OR USED IN CONNECTION WITH ANY WORK OR PROJECT OTHER THAN THE SPECIFIC PROJECT FOR WHICH THEY HAVE BEEN PREPARED AND DEVELOPED WITHOUT THE WRITTEN CONSENT OF THE ARCHITECT. VISUAL CONTACT WITH THESE DRAWINGS OR SPECIFICATIONS SHALL CONSTITUTE CONCLUSIVE EVIDENCE OF ACCEPTANCE OF THESE RESTRICTIONS. WRITTEN DIMENSIONS ON THESE DRAWINGS SHALL HAVE PRECEDENCE OVER SCALED DIMENSIONS. CONTRACTORS SHALL VERIFY AND BE RESPONSIBLE FOR ALL DIMENSIONS AND CONDITIONS ON THE JOB AND THIS OFFICE MUST BE NOTIFIED OF ANY VARIATIONS FROM THE DIMENSIONS AND CONDITIONS SHOWN BY THESE DRAWINGS. SHOP DETAILS MUST BE SUBMITTED TO THIS OFFICE FOR REVIEW BEFORE PROCEEDING WITH FABRICATION.

NO. DATE REVISION

allcove
BEACH CITIES HEALTH DISTRICT

100% PRELIMINARY DESIGN SUBMITTAL

PMA PROJECT NO.
23007

DRAWING TITLE
FIRST AND SECOND FURNITURE FLOOR PLAN

SCALE
1/16" = 1'-0"

DATE
02/28/2024

DRAWN E.C. CHECKED P.M.

SHEET NO.
A114

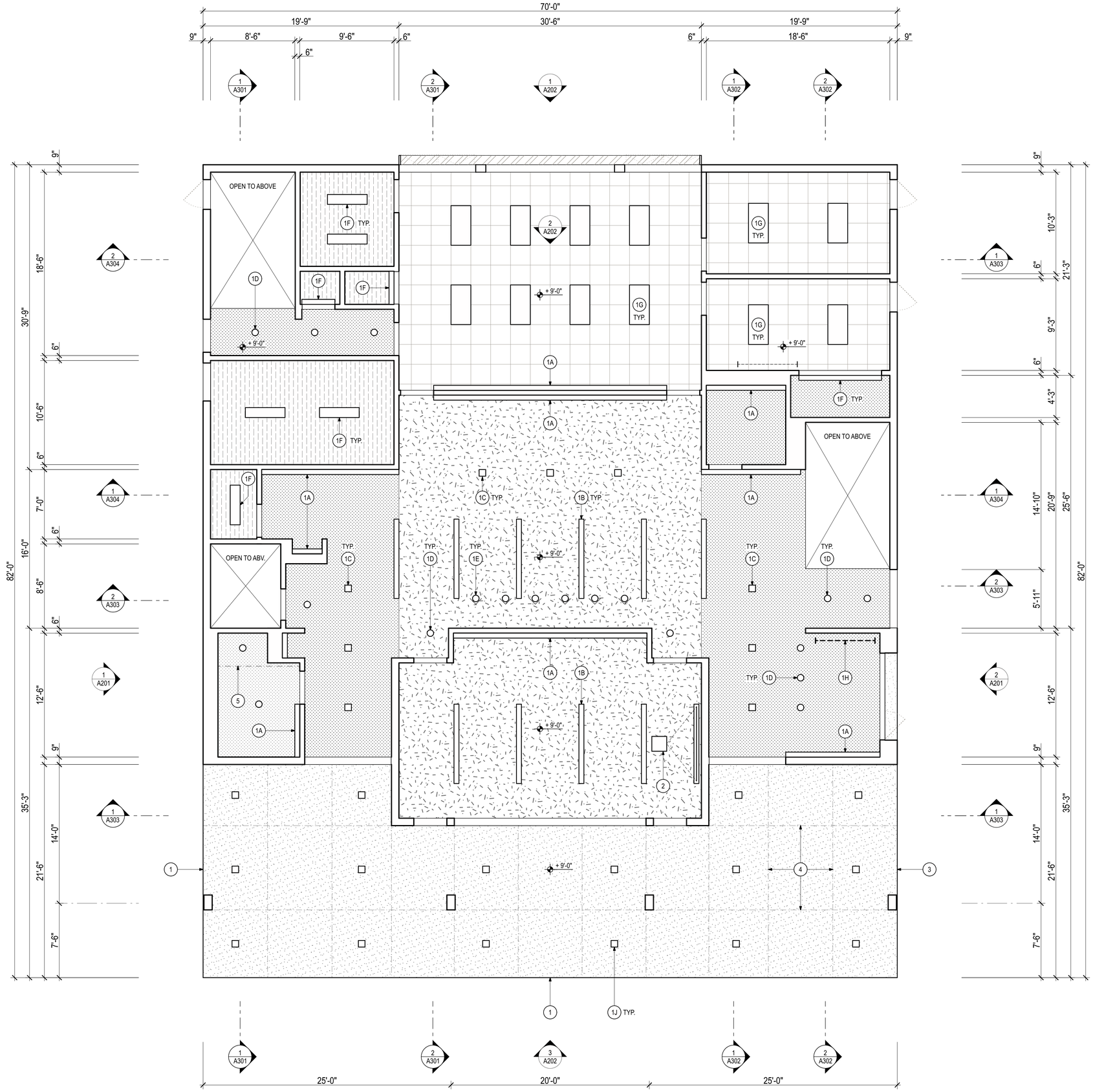

FIRST FLOOR CEILING PLAN

SCALE: 1/4" = 1'-0"

1

SYMBOL LEGEND

- OPEN TO ABOVE
- PTD. GYPSUM CEILING
- SURFACE MOUNTED ACOUSTICAL TILES MTD. OVER PTD. GYPSUM CEILING
- PTD. METAL
- PORTLAND CEMENT PLASTER ASSEMBLY
- (ACT) ACOUSTICAL CEILING TILE CEILING
- EXPOSED STRUCTURE. PAINT ALL EXPOSED SURFACES.

KEYNOTE LEGEND

1A COVE / WALL WASH LIGHT FIXTURE. SHOWN FOR REFERENCE ONLY, REFER TO ELEC. DWGS.

1B LINEAR RECESSED LIGHT FIXTURE. SHOWN FOR REFERENCE ONLY, REFER TO ELEC. DWGS.

1C DOWNLIGHT FIXTURE. SHOWN FOR REFERENCE ONLY, REFER TO ELEC. DWGS.

1D DOWNLIGHT FIXTURE. SHOWN FOR REFERENCE ONLY, REFER TO ELEC. DWGS.

1E WALL WASH LIGHT FIXTURE. SHOWN FOR REFERENCE ONLY, REFER TO ELEC. DWGS.

1F UTILITY LIGHT FIXTURE. SHOWN FOR REFERENCE ONLY, REFER TO ELEC. DWGS.

1G 2' X 4' LIGHT FIXTURE. SHOWN FOR REFERENCE ONLY, REFER TO ELEC. DWGS.

1H UNDER CABINET LIGHT FIXTURE. SHOWN FOR REFERENCE ONLY, REFER TO ELEC. DWGS.

1J EXTERIOR DOWNLIGHT FIXTURE. SHOWN FOR REFERENCE ONLY, REFER TO ELEC. DWGS.

1K EXTERIOR WALL SCONCE LIGHT FIXTURE. SHOWN FOR REFERENCE ONLY, REFER TO ELEC. DWGS.

2 CLG. MTD. SHORT THROW PROJECTOR W/ RETRACTABLE SCREEN. REFER TO IT/AV DWGS.

3 PROFILE OF PLASTER SOFFIT

4 PLASTER SOFFIT JOINT

5 FLUSH MOUNT RECESSED SHOWER CURTAIN TRACK

GENERAL NOTES

1. ALL CEILINGS TO BE 9'-0" U.N.O.
2. PAINT ALL EXPOSED SURFACES INCLUDING BUT NOT LIMTED TO DUCTWORK, CONDUIT/JUNCTION BOXES AND PIPES.
3. DIMENSIONS ARE TO FACE OF WALL FINISH U.N.O.
4. PROJECT ZERO NOTED AS EL. 0'-0" EQUALS 136.00'. REFER TO CIVIL DWGS.
5. M.E.P. FIXTURES SHOWN ON ARCH. DWGS. ARE FOR ACCURACY OF LOCATION & COORD. ONLY. THOSE NOT SHOWN ON ARCH. DWGS. SHALL BE LOCATED PER THE M.E.P. DWGS.
6. REFER TO AV/IT DWGS. FOR ADDITIONAL DEVICES AT CLG.
6. ALL DEVICES + FIXTURES TO BE CENTERED ON CEILING TILE OR JOINT U.N.O.
7. PROVIDE ACCESS HATCH FOR EQUIP. + DEVICES AS REQ'D. COORD. ACCESS PANEL LOCATIONS W/ ARCH. PRIOR TO INST.
8. CEILING TILE LAYOUTS TO BE CENTERED IN ROOM IN BOTH DIRECTIONS U.N.O.
9. FIRE SPRINKLER HEAD LOCATIONS TO BE COORD. W/ ARCH.
10. REFER TO ELEC. DWGS. FOR LIGHT FIXTURE TYPES + LOCATIONS.
11. PROVIDE ILLUMINATION IN ACCORDANCE W/ CBC SECTION 1205. REFER TO ELEC. DWGS.

1' 4' 16'

PLAN NORTH N

PAUL MURDOCH ARCHITECTS

6310 SAN VICENTE BLVD. SUITE 400
LOS ANGELES, CA 90048
T. 310 358-0993

THE DRAWINGS AND SPECIFICATIONS AND IDEAS, DESIGNS, AND ARRANGEMENTS REPRESENTED THEREBY ARE AND SHALL REMAIN THE PROPERTY OF THE ARCHITECT AND NO PART THEREOF SHALL BE COPIED, DISCLOSED TO OTHERS, OR USED IN CONNECTION WITH ANY WORK OR PROJECT OTHER THAN THE SPECIFIC PROJECT FOR WHICH THEY HAVE BEEN PREPARED AND DEVELOPED WITHOUT THE WRITTEN CONSENT OF THE ARCHITECT. VISUAL CONTACT WITH THESE DRAWINGS OR SPECIFICATIONS SHALL CONSTITUTE CONCLUSIVE EVIDENCE OF ACCEPTANCE OF THESE RESTRICTIONS. WRITTEN DIMENSIONS ON THESE DRAWINGS SHALL HAVE PRECEDENCE OVER SCALED DIMENSIONS. CONTRACTORS SHALL VERIFY AND BE RESPONSIBLE FOR ALL DIMENSIONS AND CONDITIONS ON THE JOB AND THIS OFFICE MUST BE NOTIFIED OF ANY VARIATIONS FROM THE DIMENSIONS AND CONDITIONS SHOWN BY THESE DRAWINGS. SHOP DETAILS MUST BE SUBMITTED TO THIS OFFICE FOR REVIEW BEFORE PROCEEDING WITH FABRICATION.

NO. DATE REVISION

allcove
BEACH CITIES HEALTH DISTRICT

100% PRELIMINARY DESIGN SUBMITTAL

PMA PROJECT NO.
23007

DRAWING TITLE
FIRST FLOOR REFLECTED CEILING PLAN

SCALE
1/4" = 1'-0"

DATE
02/28/2024

DRAWN E.C. CHECKED P.M.

SHEET NO.
A121

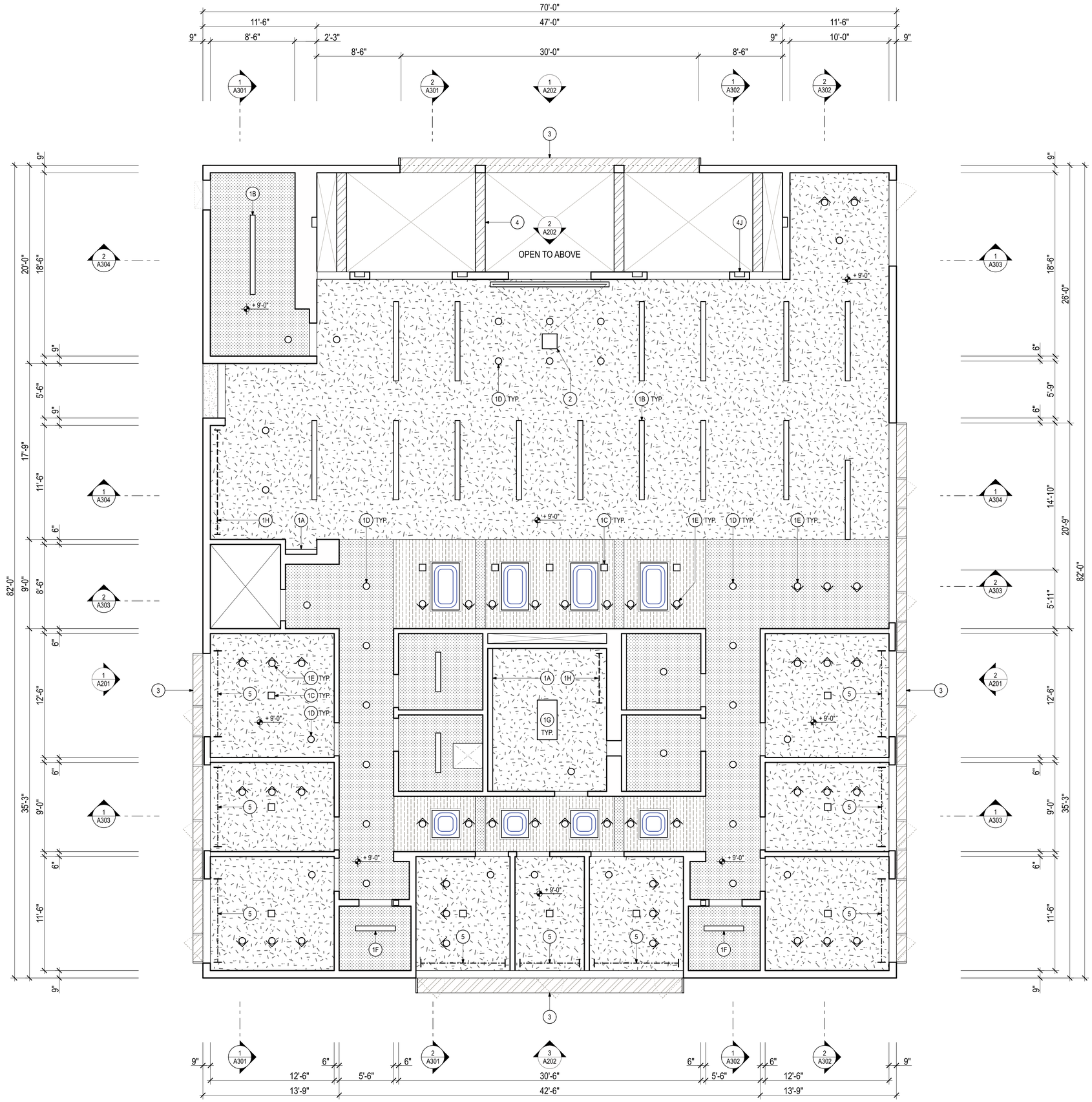

SECOND FLOOR CEILING PLAN

SCALE: 1/4" = 1'-0"

1

SYMBOL LEGEND

- OPEN TO ABOVE
- PTD. GYPSUM CEILING
- SURFACE MOUNTED ACOUSTICAL TILES MTD. OVER PTD. GYPSUM CEILING
- PTD. METAL
- OPEN AREA W/ EXPOSED CEILING PAINT ALL EXPOSED SURFACES MINIMIZE UTILITY RUNS IN THIS AREA
- DOME SKYLIGHT

KEYNOTE LEGEND

1A COVE / WALL WASH LIGHT FIXTURE. SHOWN FOR REFERENCE ONLY, REFER TO ELEC. DWGS.

1B LINEAR RECESSED LIGHT FIXTURE. SHOWN FOR REFERENCE ONLY, REFER TO ELEC. DWGS.

1C DOWNLIGHT FIXTURE. SHOWN FOR REFERENCE ONLY, REFER TO ELEC. DWGS.

1D DOWNLIGHT FIXTURE. SHOWN FOR REFERENCE ONLY, REFER TO ELEC. DWGS.

1E WALL WASH LIGHT FIXTURE. SHOWN FOR REFERENCE ONLY, REFER TO ELEC. DWGS.

1F UTILITY LIGHT FIXTURE. SHOWN FOR REFERENCE ONLY, REFER TO ELEC. DWGS.

1G 2' X 4' LIGHT FIXTURE. SHOWN FOR REFERENCE ONLY, REFER TO ELEC. DWGS.

1H UNDER CABINET LIGHT FIXTURE. SHOWN FOR REFERENCE ONLY, REFER TO ELEC. DWGS.

1J EXTERIOR DOWNLIGHT FIXTURE. SHOWN FOR REFERENCE ONLY, REFER TO ELEC. DWGS.

1K EXTERIOR WALL SCONCE LIGHT FIXTURE. SHOWN FOR REFERENCE ONLY, REFER TO ELEC. DWGS.

2 CLG. MTD. SHORT THROW PROJECTOR W/ RETRACTABLE SCREEN. REFER TO IT/AV DWGS.

3 PROFILE OF PLASTER SOFFIT

4 STL. BEAM ENCLOSURE

5 FLUSH MOUNT RECESSED SHOWER CURTAIN TRACK

GENERAL NOTES

1. ALL CEILINGS TO BE 9'-0" U.N.O.
2. PAINT ALL EXPOSED SURFACES INCLUDING BUT NOT LIMTED TO DUCTWORK, CONDUIT/JUNCTION BOXES AND PIPES.
3. DIMENSIONS ARE TO FACE OF WALL FINISH U.N.O.
4. PROJECT ZERO NOTED AS EL. 0'-0" EQUALS 136.00'. REFER TO CIVIL DWGS.
5. M.E.P. FIXTURES SHOWN ON ARCH. DWGS. ARE FOR ACCURACY OF LOCATION & COORD. ONLY. THOSE NOT SHOWN ON ARCH. DWGS. SHALL BE LOCATED PER THE M.E.P. DWGS.
6. REFER TO AV/IT DWGS. FOR ADDITIONAL DEVICES AT CLG.
6. ALL DEVICES + FIXTURES TO BE CENTERED ON CEILING TILE OR JOINT U.N.O.
7. PROVIDE ACCESS HATCH FOR EQUIP. + DEVICES AS REQ'D. COORD. ACCESS PANEL LOCATIONS W/ ARCH. PRIOR TO INST.
8. CEILING TILE LAYOUTS TO BE CENTERED IN ROOM IN BOTH DIRECTIONS U.N.O.
9. FIRE SPRINKLER HEAD LOCATIONS TO BE COORD. W/ ARCH.
10. REFER TO ELEC. DWGS. FOR LIGHT FIXTURE TYPES + LOCATIONS.
11. PROVIDE ILLUMINATION IN ACCORDANCE W/ CBC SECTION 1205. REFER TO ELEC. DWGS.

PLAN NORTH

1' 4' 16'

PAUL MURDOCH ARCHITECTS

6310 SAN VICENTE BLVD. SUITE 400
LOS ANGELES, CA 90048
T. 310 358-0993

THE DRAWINGS AND SPECIFICATIONS AND IDEAS, DESIGNS, AND ARRANGEMENTS REPRESENTED THEREBY ARE AND SHALL REMAIN THE PROPERTY OF THE ARCHITECT AND NO PART THEREOF SHALL BE COPIED, DISCLOSED TO OTHERS, OR USED IN CONNECTION WITH ANY WORK OR PROJECT OTHER THAN THE SPECIFIC PROJECT FOR WHICH THEY HAVE BEEN PREPARED AND DEVELOPED WITHOUT THE WRITTEN CONSENT OF THE ARCHITECT. VISUAL CONTACT WITH THESE DRAWINGS OR SPECIFICATIONS SHALL CONSTITUTE CONCLUSIVE EVIDENCE OF ACCEPTANCE OF THESE RESTRICTIONS. WRITTEN DIMENSIONS ON THESE DRAWINGS SHALL HAVE PRECEDENCE OVER SCALED DIMENSIONS. CONTRACTORS SHALL VERIFY AND BE RESPONSIBLE FOR ALL DIMENSIONS AND CONDITIONS ON THE JOB AND THIS OFFICE MUST BE NOTIFIED OF ANY VARIATIONS FROM THE DIMENSIONS AND CONDITIONS SHOWN BY THESE DRAWINGS. SHOP DETAILS MUST BE SUBMITTED TO THIS OFFICE FOR REVIEW BEFORE PROCEEDING WITH FABRICATION.

NO.	DATE	REVISION

allcove
BEACH CITIES HEALTH DISTRICT

100% PRELIMINARY DESIGN SUBMITTAL

PMA PROJECT NO.
23007

DRAWING TITLE
SECOND FLOOR REFLECTED CEILING PLAN

SCALE
1/4" = 1'-0"

DATE
02/28/2024

DRAWN E.C. CHECKED P.M.

SHEET NO.
A122

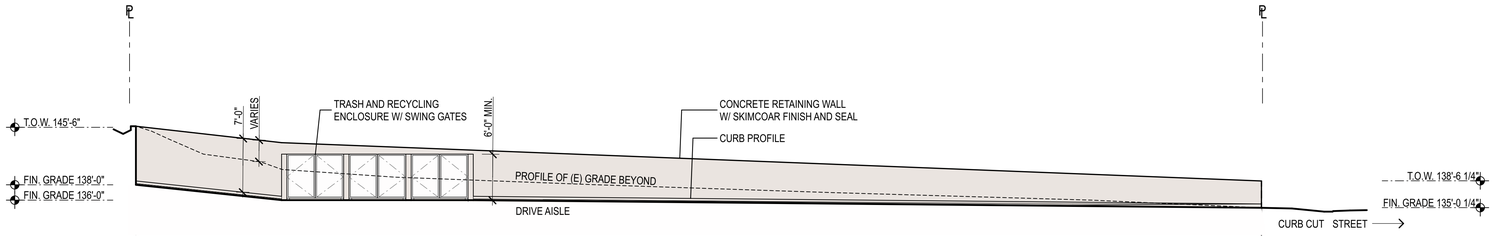

SITE WALL ELEVATION WEST (1)

SCALE: 1/8" = 1'-0"

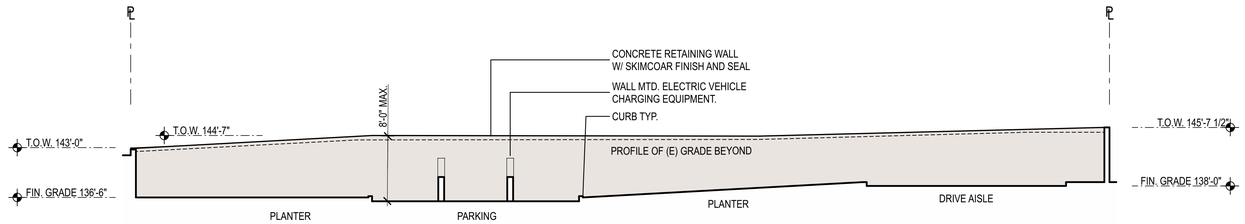

SITE WALL ELEVATION SOUTH (2)

SCALE: 1/8" = 1'-0"

SITE WALL ELEVATION EAST (4)

SCALE: 1/8" = 1'-0"

GENERAL NOTES

1. PROVIDE ANTI-GRAFFITI COATING ON ALL EXPOSED WALL SURFACES

2' 8' 32'

PAUL MURDOCH ARCHITECTS

6310 SAN VICENTE BLVD. SUITE 400
LOS ANGELES, CA 90048
T. 310 358-0993

THE DRAWINGS AND SPECIFICATIONS AND IDEAS, DESIGNS, AND ARRANGEMENTS REPRESENTED THEREBY ARE AND SHALL REMAIN THE PROPERTY OF THE ARCHITECT AND NO PART THEREOF SHALL BE COPIED, DISCLOSED TO OTHERS, OR USED IN CONNECTION WITH ANY WORK OR PROJECT OTHER THAN THE SPECIFIC PROJECT FOR WHICH THEY HAVE BEEN PREPARED AND DEVELOPED WITHOUT THE WRITTEN CONSENT OF THE ARCHITECT. VISUAL CONTACT WITH THESE DRAWINGS OR SPECIFICATIONS SHALL CONSTITUTE CONCLUSIVE EVIDENCE OF ACCEPTANCE OF THESE RESTRICTIONS. WRITTEN DIMENSIONS ON THESE DRAWINGS SHALL HAVE PRECEDENCE OVER SCALED DIMENSIONS. CONTRACTORS SHALL VERIFY AND BE RESPONSIBLE FOR ALL DIMENSIONS AND CONDITIONS ON THE JOB AND THIS OFFICE MUST BE NOTIFIED OF ANY VARIATIONS FROM THE DIMENSIONS AND CONDITIONS SHOWN BY THESE DRAWINGS. SHOP DETAILS MUST BE SUBMITTED TO THIS OFFICE FOR REVIEW BEFORE PROCEEDING WITH FABRICATION.

NO.	DATE	REVISION

allcove
BEACH CITIES HEALTH DISTRICT

100% PRELIMINARY DESIGN SUBMITTAL

PMA PROJECT NO.
23007

DRAWING TITLE
SITE WALL ELEVATIONS

SCALE

DATE
02/28/2024

DRAWN E.C. CHECKED P.M.

SHEET NO.
A200

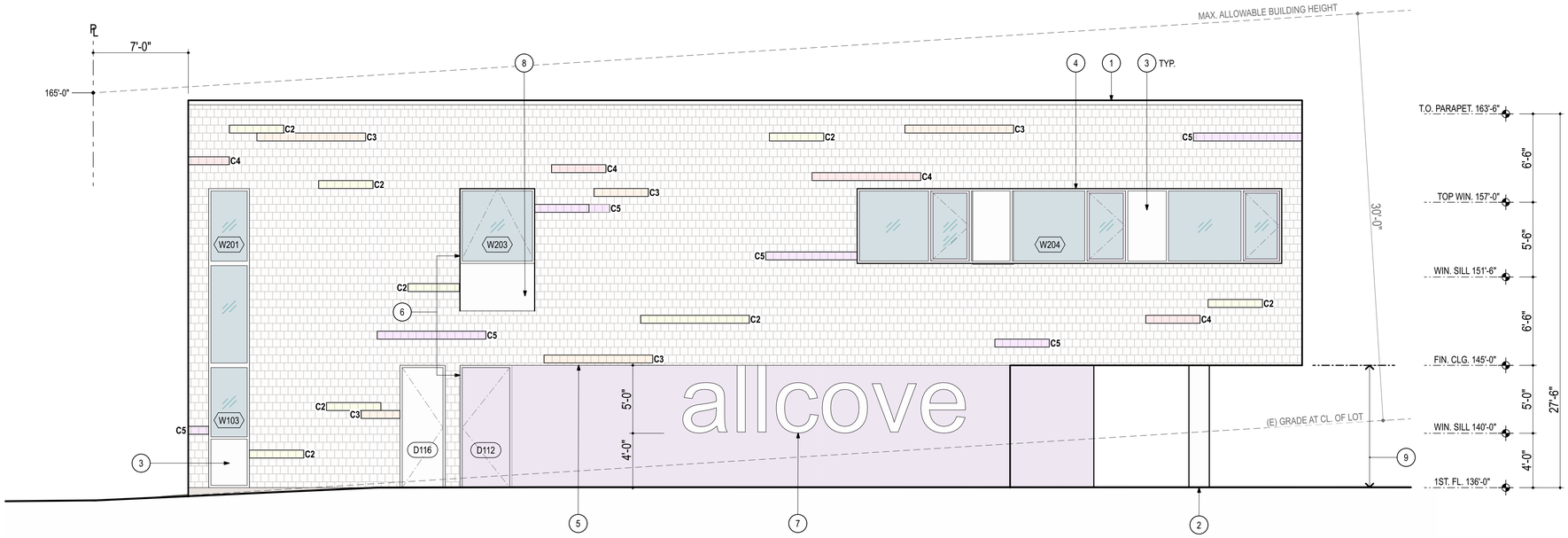

WEST ELEVATION 1

SCALE: 1/4" = 1'-0"

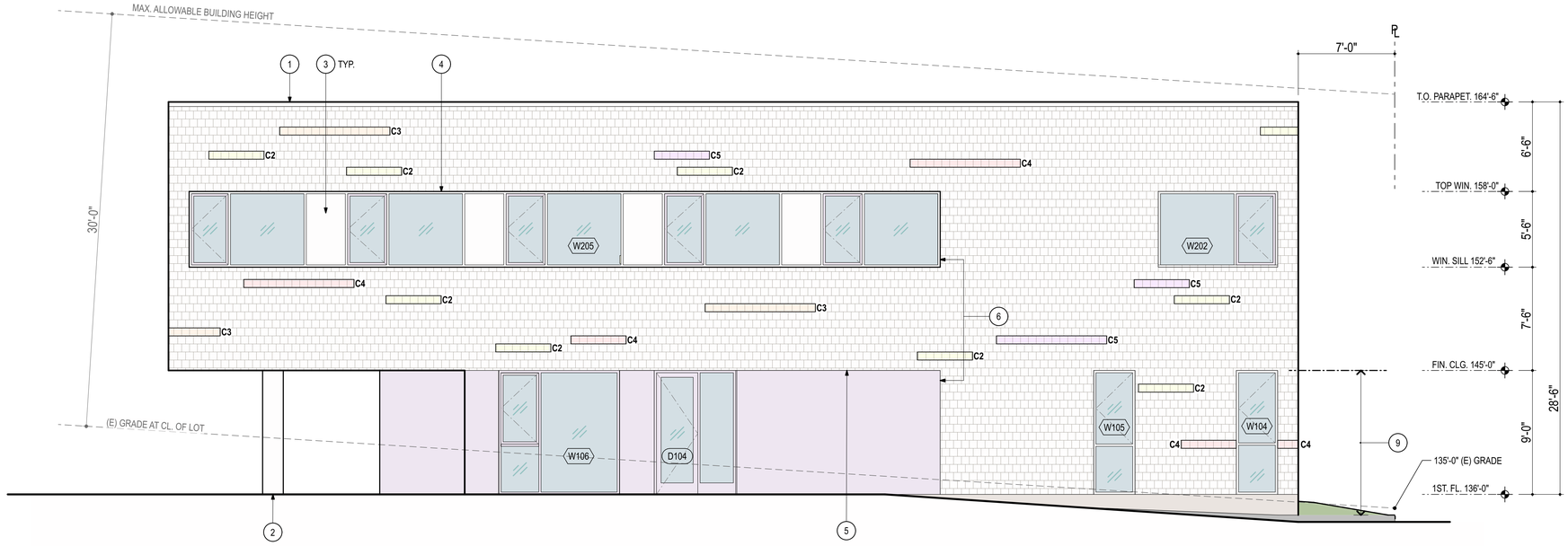

EAST ELEVATION 2

SCALE: 1/4" = 1'-0"

SYMBOL LEGEND

- PTD. SMOOTH PLASTER WALL FINISH MATCH C5 COLOR
- FIBER CEMENT SHINGLE SIDING COLOR - 01 TYP. U.N.O. REFER TO COLOR LEGEND BELOW (C2)
- GLASS / GLAZING
- CONCRETE
- OPERABLE WINDOW OR DOOR

FIBER CEMENT SIDING COLOR LEGEND

- **C1** WHITE PICKET FENCE
- **C2** BABY CHICK
- **C3** FADING PEACH
- **C4** ROSE COVERED COTTAGE
- **C5** PERIWINKLE

KEYNOTE LEGEND

1. PTD. STL. COPING
2. STL. COLUMN W/ METAL COLUMN COVER.
3. PTD. INSULATED METAL INFILL PANEL W/ IN FRAMING.
4. 12" EXTENDED AL. CAP COVERS
5. PTD. FLASHING AT EXT. MATERIAL TRANSITION AS REQ'D.
6. ALIGN
7. BUILDING SIGNGE: SURFACE PAINTED LETTERING.
8. FIBER CEMENT PANEL AT SLOPED SILL
9. PROVIDE ANTI-GRAFFITI COATING UP TO THIS HEIGHT TYP. ON ALL EXT. WALLS

1' 4' 16'

PAUL MURDOCH ARCHITECTS

6310 SAN VICENTE BLVD. SUITE 400
LOS ANGELES, CA 90048
T. 310 358-0993

THE DRAWINGS AND SPECIFICATIONS AND IDEAS, DESIGNS, AND ARRANGEMENTS REPRESENTED THEREBY ARE AND SHALL REMAIN THE PROPERTY OF THE ARCHITECT AND NO PART THEREOF SHALL BE COPIED, DISCLOSED TO OTHERS, OR USED IN CONNECTION WITH ANY WORK OR PROJECT OTHER THAN THE SPECIFIC PROJECT FOR WHICH THEY HAVE BEEN PREPARED AND DEVELOPED WITHOUT THE WRITTEN CONSENT OF THE ARCHITECT. VISUAL CONTACT WITH THESE DRAWINGS OR SPECIFICATIONS SHALL CONSTITUTE CONCLUSIVE EVIDENCE OF ACCEPTANCE OF THESE RESTRCTIONS. WRITTEN DIMENSIONS ON THESE DRAWINGS SHALL HAVE PRECEDENCE OVER SCALED DIMENSIONS. CONTRACTORS SHALL VERIFY AND BE RESPONSIBLE FOR ALL DIMENSIONS AND CONDITIONS ON THE JOB AND THIS OFFICE MUST BE NOTIFIED OF ANY VARIATIONS FROM THE DIMENSIONS AND CONDITIONS SHOWN BY THESE DRAWINGS. SHOP DETAILS MUST BE SUBMITTED TO THIS OFFICE FOR REVIEW BEFORE PROCEEDING WITH FABRICATION.

NO.	DATE	REVISION

allcove
BEACH CITIES HEALTH DISTRICT

100% PRELIMINARY DESIGN SUBMITTAL

PMA PROJECT NO.
23007

DRAWING TITLE
EXTERIOR ELEVATIONS

SCALE
1/4" = 1'-0"

DATE
02/28/2024

DRAWN E.C. CHECKED P.M.

SHEET NO.
A201

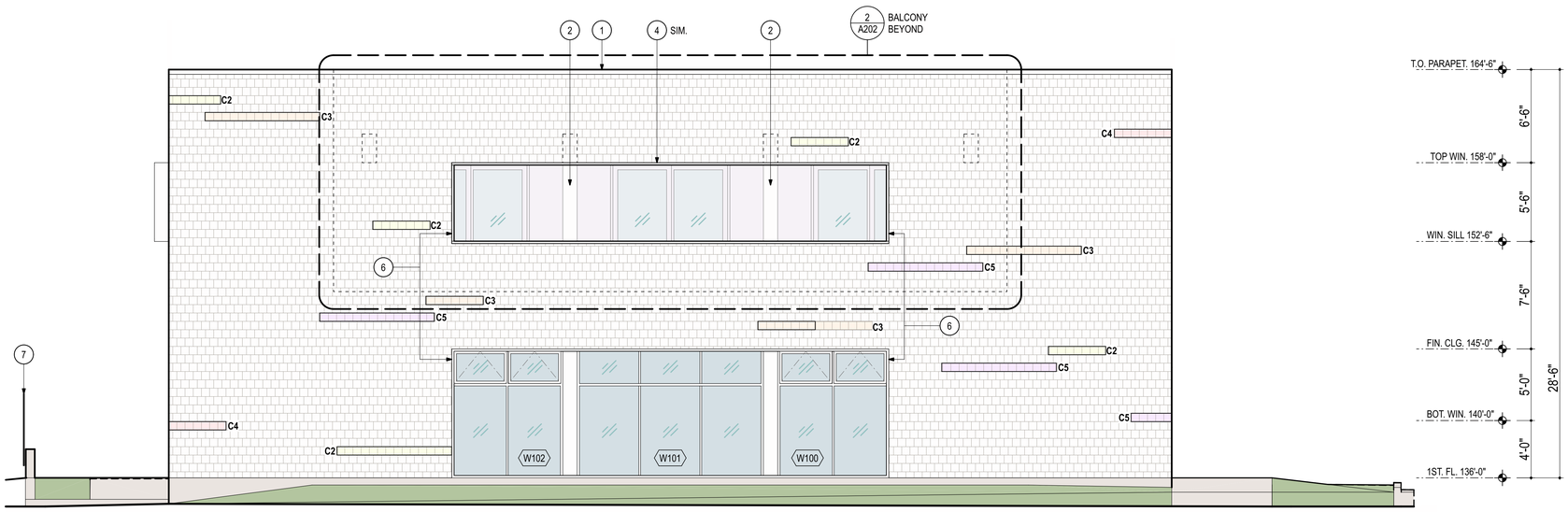

NORTH ELEVATION 1
SCALE: 1/4" = 1'-0"

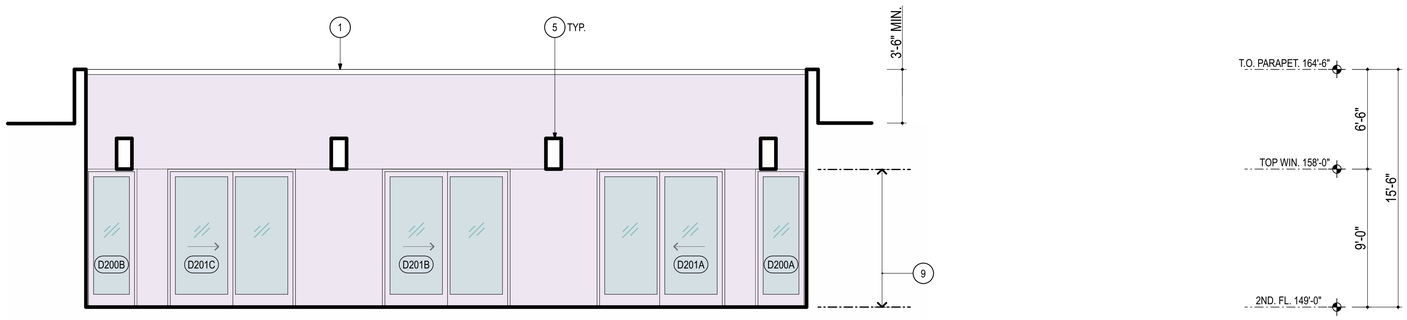

NORTH ELEVATION - BALCONY 2
SCALE: 1/4" = 1'-0"

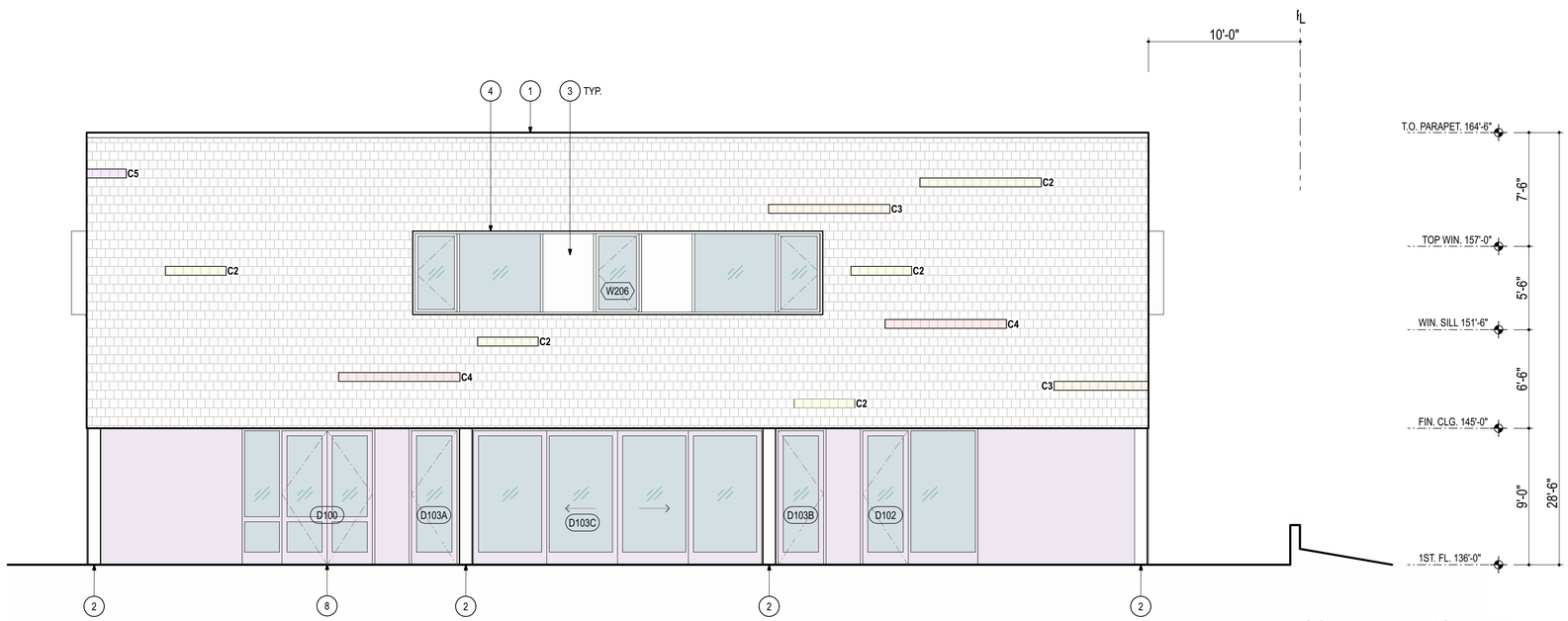

SOUTH ELEVATION 3
SCALE: 1/4" = 1'-0"

SYMBOL LEGEND

- PTD. SMOOTH PLASTER WALL FINISH MATCH C5 COLOR
- FIBER CEMENT SHINGLE SIDING COLOR - 01 TYP. U.N.O. REFER TO COLOR LEGEND BELOW (C2)
- GLASS / GLAZING
- CONCRETE
- OPERABLE WINDOW OR DOOR

FIBER CEMENT SIDING COLOR LEGEND

- **C1** WHITE PICKET FENCE
- **C2** BABY CHICK
- **C3** FADING PEACH
- **C4** ROSE COVERED COTTAGE
- **C5** PERIWINKLE

KEYNOTE LEGEND

1. PTD. STL. COPING
2. STL. COLUMN W/ METAL COLUMN COVER.
3. PTD. INSULATED METAL INFILL PANEL W/ IN FRAMING.
4. 12" EXTENDED AL. CAP COVERS
5. PTD. AL. BEAM ENCLOSURE
6. ALIGN
7. PTD. AL. SIGN MONUMENT ON CONC BASE
8. MAIN ENTRY
9. PROVIDE ANTI-GRAFFITI COATING UP TO THIS HEIGHT TYP. ON ALL EXT. WALLS

1' 4' 16'

PAUL MURDOCH ARCHITECTS

6310 SAN VICENTE BLVD. SUITE 400
LOS ANGELES, CA 90048
T. 310 358-0993

THE DRAWINGS AND SPECIFICATIONS AND IDEAS, DESIGNS, AND ARRANGEMENTS REPRESENTED THEREBY ARE AND SHALL REMAIN THE PROPERTY OF THE ARCHITECT AND NO PART THEREOF SHALL BE COPIED, DISCLOSED TO OTHERS, OR USED IN CONNECTION WITH ANY WORK OR PROJECT OTHER THAN THE SPECIFIC PROJECT FOR WHICH THEY HAVE BEEN PREPARED AND DEVELOPED WITHOUT THE WRITTEN CONSENT OF THE ARCHITECT. VISUAL CONTACT WITH THESE DRAWINGS OR SPECIFICATIONS SHALL CONSTITUTE CONCLUSIVE EVIDENCE OF ACCEPTANCE OF THESE RESTRCTIONS. WRITTEN DIMENSIONS ON THESE DRAWINGS SHALL HAVE PRECEDENCE OVER SCALED DIMENSIONS. CONTRACTORS SHALL VERIFY AND BE RESPONSIBLE FOR ALL DIMENSIONS AND CONDITIONS ON THE JOB AND THIS OFFICE MUST BE NOTIFIED OF ANY VARIATIONS FROM THE DIMENSIONS AND CONDITIONS SHOWN BY THESE DRAWINGS. SHOP DETAILS MUST BE SUBMITTED TO THIS OFFICE FOR REVIEW BEFORE PROCEEDING WITH FABRICATION.

NO.	DATE	REVISION

allcove
BEACH CITIES HEALTH DISTRICT

100% PRELIMINARY DESIGN SUBMITTAL

PMA PROJECT NO.
23007

DRAWING TITLE
EXTERIOR ELEVATIONS

SCALE
1/4" = 1'-0"

DATE
02/28/2024

DRAWN E.C. CHECKED P.M.

SHEET NO.
A202

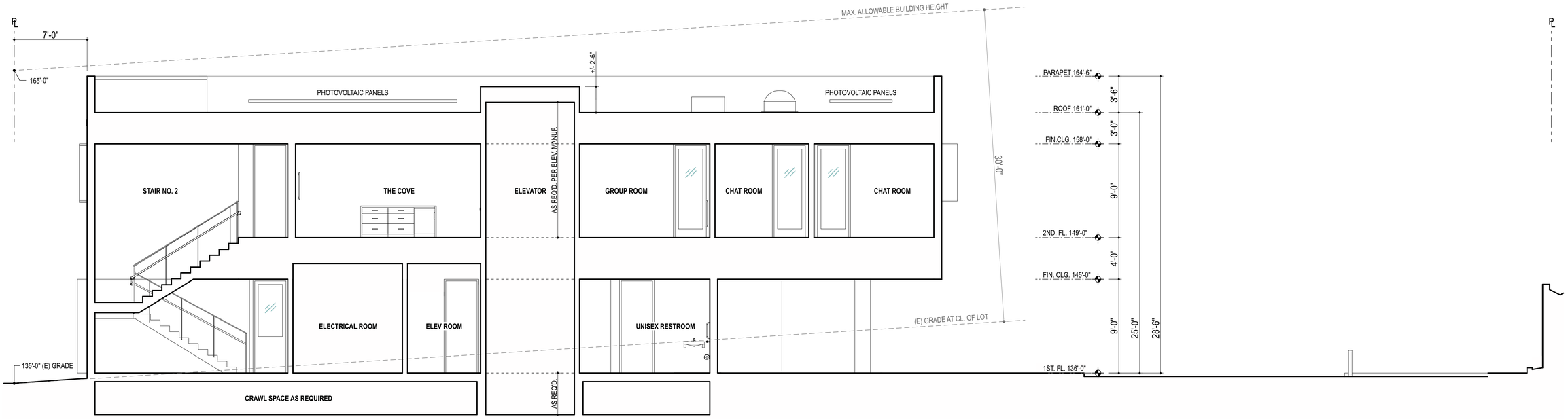

BUILDING SECTION 01 (1)
SCALE: 1/4" = 1'-0"

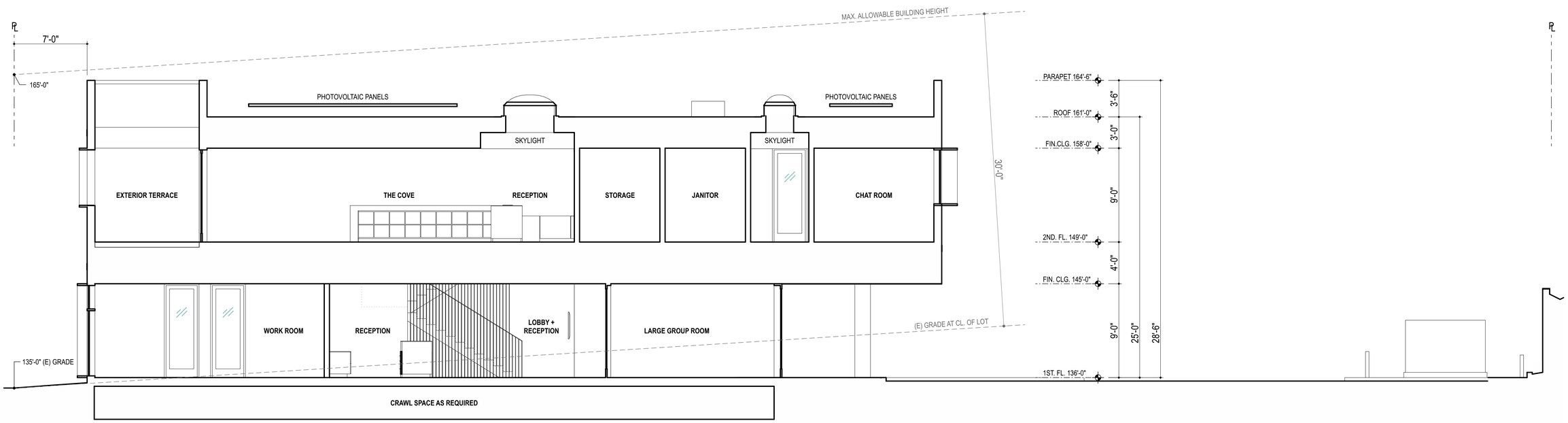

BUILDING SECTION 02 (2)
SCALE: 1/4" = 1'-0"

1' 4' 16'

PAUL MURDOCH ARCHITECTS

6310 SAN VICENTE BLVD. SUITE 400
LOS ANGELES, CA 90048
T. 310 358-0993

THE DRAWINGS AND SPECIFICATIONS AND IDEAS, DESIGNS, AND ARRANGEMENTS REPRESENTED THEREBY ARE AND SHALL REMAIN THE PROPERTY OF THE ARCHITECT AND NO PART THEREOF SHALL BE COPIED, DISCLOSED TO OTHERS, OR USED IN CONNECTION WITH ANY WORK OR PROJECT OTHER THAN THE SPECIFIC PROJECT FOR WHICH THEY HAVE BEEN PREPARED AND DEVELOPED WITHOUT THE WRITTEN CONSENT OF THE ARCHITECT. VISUAL CONTACT WITH THESE DRAWINGS OR SPECIFICATIONS SHALL CONSTITUTE CONCLUSIVE EVIDENCE OF ACCEPTANCE OF THESE RESTRCTIONS. WRITTEN DIMENSIONS ON THESE DRAWINGS SHALL HAVE PRECEDENCE OVER SCALED DIMENSIONS. CONTRACTORS SHALL VERIFY AND BE RESPONSIBLE FOR ALL DIMENSIONS AND CONDITIONS ON THE JOB AND THIS OFFICE MUST BE NOTIFIED OF ANY VARIATIONS FROM THE DIMENSIONS AND CONDITIONS SHOWN BY THESE DRAWINGS. SHOP DETAILS MUST BE SUBMITTED TO THIS OFFICE FOR REVIEW BEFORE PROCEEDING WITH FABRICATION.

NO. DATE REVISION

allcove
BEACH CITIES HEALTH DISTRICT

100% PRELIMINARY DESIGN SUBMITTAL

PMA PROJECT NO.
23007

DRAWING TITLE
BUILDING SECTION

SCALE
1/4" = 1'-0"

DATE
02/28/2024

DRAWN E.C. CHECKED P.M.

SHEET NO.
A301

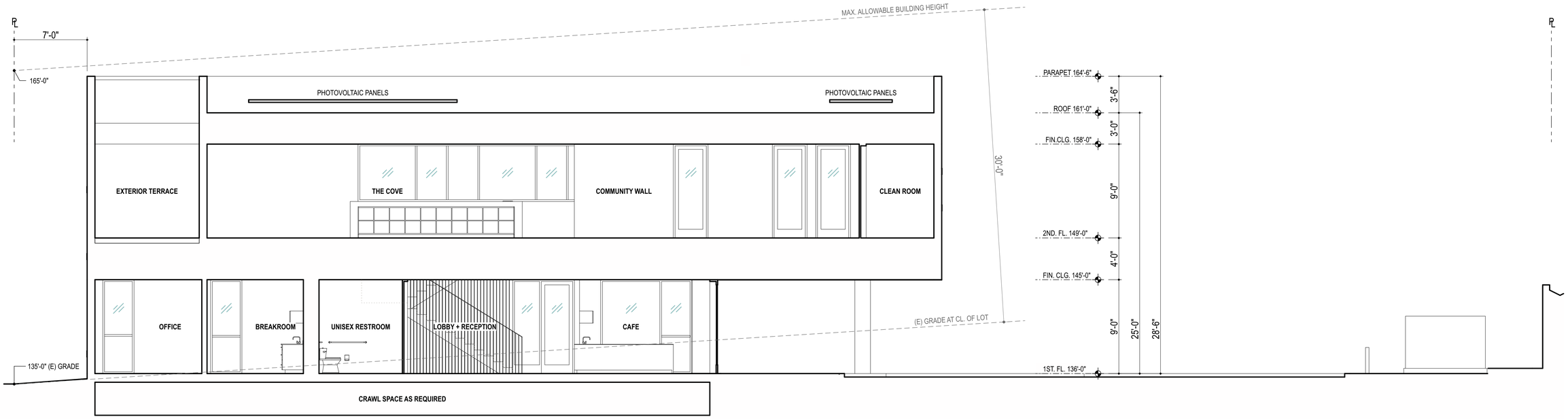

BUILDING SECTION 03

SCALE: 1/4" = 1'-0"

1

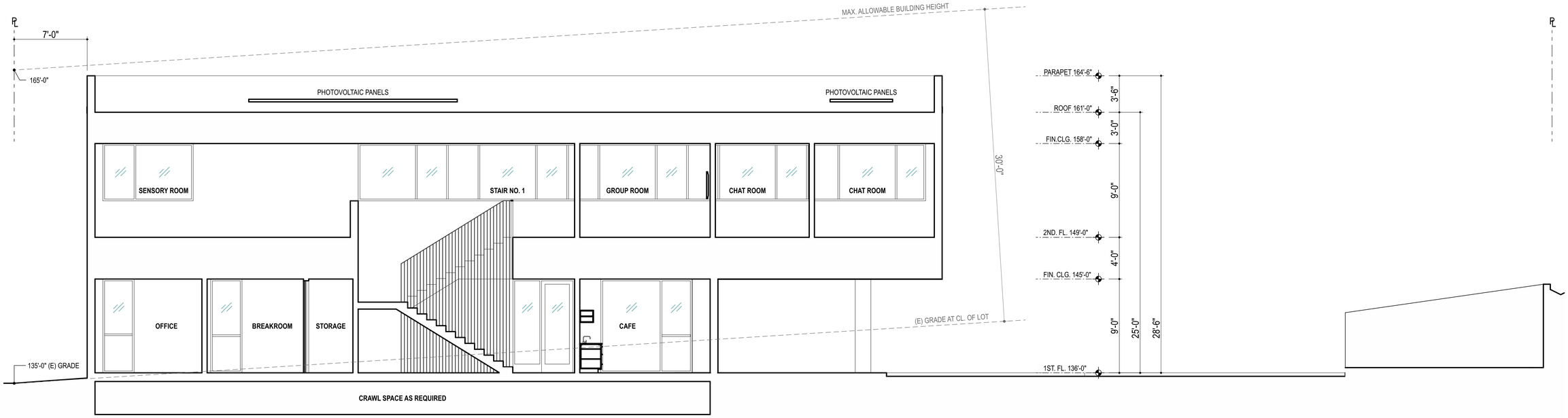

BUILDING SECTION 04

SCALE: 1/4" = 1'-0"

2

1' 4' 16'

PAUL MURDOCH ARCHITECTS

6310 SAN VICENTE BLVD. SUITE 400
LOS ANGELES, CA 90048
T. 310 358-0993

THE DRAWINGS AND SPECIFICATIONS AND IDEAS, DESIGNS, AND ARRANGEMENTS REPRESENTED THEREBY ARE AND SHALL REMAIN THE PROPERTY OF THE ARCHITECT AND NO PART THEREOF SHALL BE COPIED, DISCLOSED TO OTHERS, OR USED IN CONNECTION WITH ANY WORK OR PROJECT OTHER THAN THE SPECIFIC PROJECT FOR WHICH THEY HAVE BEEN PREPARED AND DEVELOPED WITHOUT THE WRITTEN CONSENT OF THE ARCHITECT. VISUAL CONTACT WITH THESE DRAWINGS OR SPECIFICATIONS SHALL CONSTITUTE CONCLUSIVE EVIDENCE OF ACCEPTANCE OF THESE RESTRCTIONS. WRITTEN DIMENSIONS ON THESE DRAWINGS SHALL HAVE PRECEDENCE OVER SCALED DIMENSIONS. CONTRACTORS SHALL VERIFY AND BE RESPONSIBLE FOR ALL DIMENSIONS AND CONDITIONS ON THE JOB AND THIS OFFICE MUST BE NOTIFIED OF ANY VARIATIONS FROM THE DIMENSIONS AND CONDITIONS SHOWN BY THESE DRAWINGS. SHOP DETAILS MUST BE SUBMITTED TO THIS OFFICE FOR REVIEW BEFORE PROCEEDING WITH FABRICATION.

NO.	DATE	REVISION

allcove
BEACH CITIES HEALTH DISTRICT

100% PRELIMINARY DESIGN SUBMITTAL

PMA PROJECT NO.
23007

DRAWING TITLE
BUILDING SECTION

SCALE
1/4" = 1'-0"

DATE
02/28/2024

DRAWN E.C. CHECKED P.M.

SHEET NO.
A302

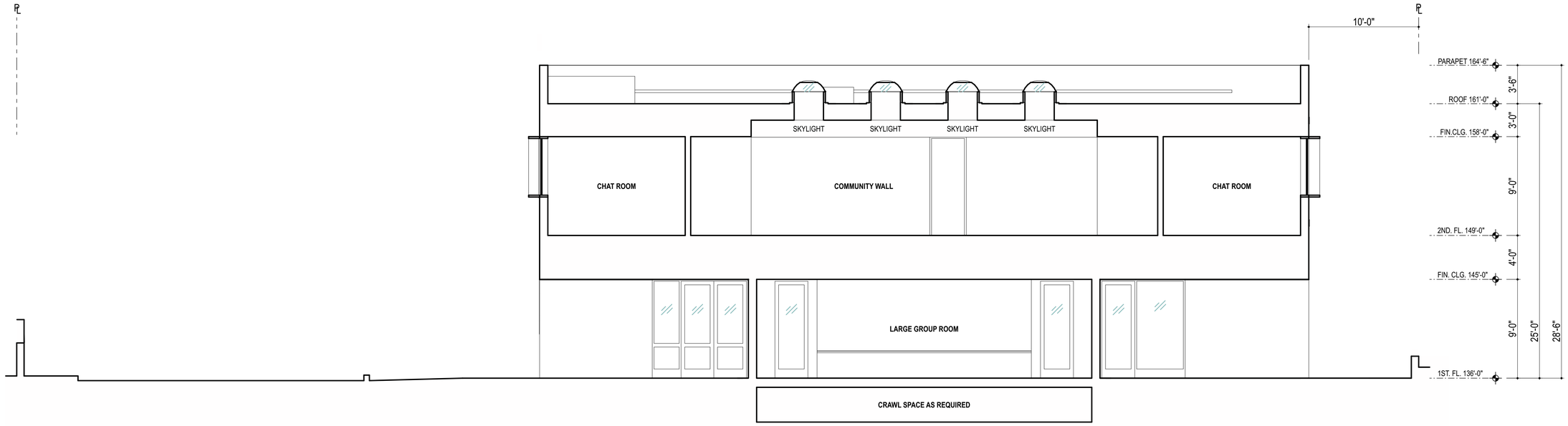

BUILDING SECTION 05 (1)
SCALE: 1/4" = 1'-0"

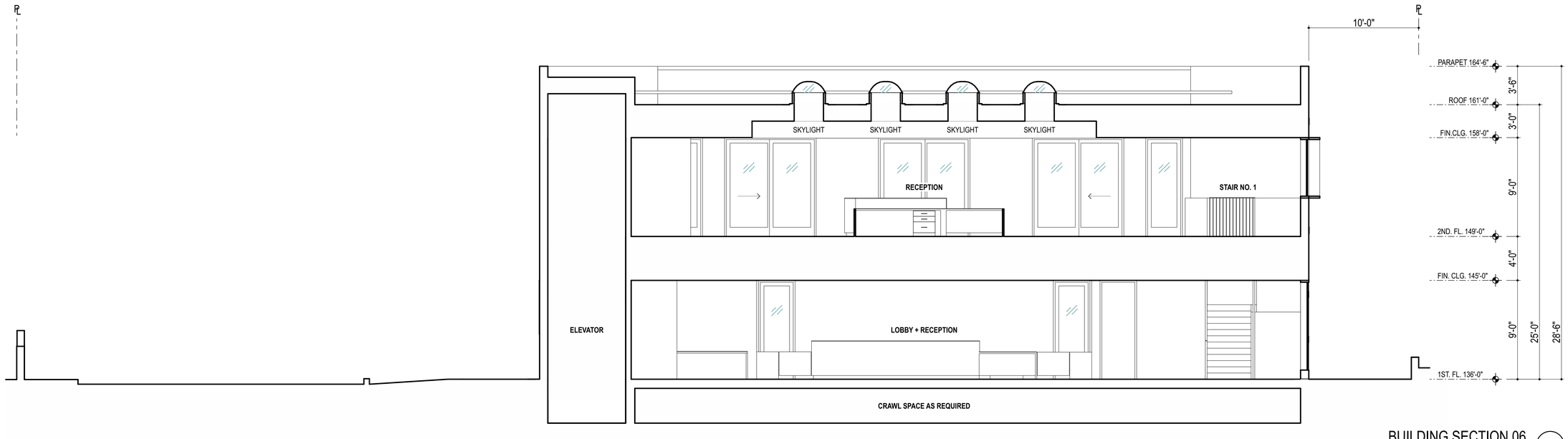

BUILDING SECTION 06 (2)
SCALE: 1/4" = 1'-0"

1' 4' 16'

PAUL MURDOCH ARCHITECTS

6310 SAN VICENTE BLVD. SUITE 400
LOS ANGELES, CA 90048
T. 310 358-0993

THE DRAWINGS AND SPECIFICATIONS AND IDEAS, DESIGNS, AND ARRANGEMENTS REPRESENTED THEREBY ARE AND SHALL REMAIN THE PROPERTY OF THE ARCHITECT AND NO PART THEREOF SHALL BE COPIED, DISCLOSED TO OTHERS, OR USED IN CONNECTION WITH ANY WORK OR PROJECT OTHER THAN THE SPECIFIC PROJECT FOR WHICH THEY HAVE BEEN PREPARED AND DEVELOPED WITHOUT THE WRITTEN CONSENT OF THE ARCHITECT. VISUAL CONTACT WITH THESE DRAWINGS OR SPECIFICATIONS SHALL CONSTITUTE CONCLUSIVE EVIDENCE OF ACCEPTANCE OF THESE RESTRICTIONS. WRITTEN DIMENSIONS ON THESE DRAWINGS SHALL HAVE PRECEDENCE OVER SCALED DIMENSIONS. CONTRACTORS SHALL VERIFY AND BE RESPONSIBLE FOR ALL DIMENSIONS AND CONDITIONS ON THE JOB AND THIS OFFICE MUST BE NOTIFIED OF ANY VARIATIONS FROM THE DIMENSIONS AND CONDITIONS SHOWN BY THESE DRAWINGS. SHOP DETAILS MUST BE SUBMITTED TO THIS OFFICE FOR REVIEW BEFORE PROCEEDING WITH FABRICATION.

NO.	DATE	REVISION

allcove
BEACH CITIES HEALTH DISTRICT

100% PRELIMINARY DESIGN SUBMITTAL

PMA PROJECT NO.
23007

DRAWING TITLE
BUILDING SECTION

SCALE
1/4" = 1'-0"

DATE
02/28/2024

DRAWN E.C. CHECKED P.M.

SHEET NO.
A303

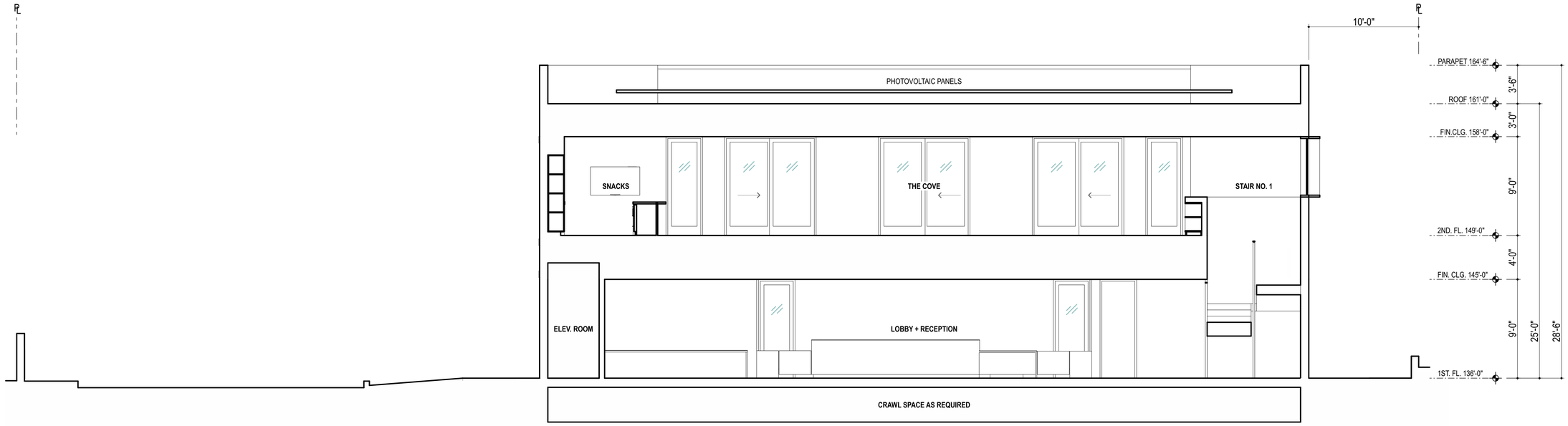

BUILDING SECTION 07 (1)
SCALE: 1/4" = 1'-0"

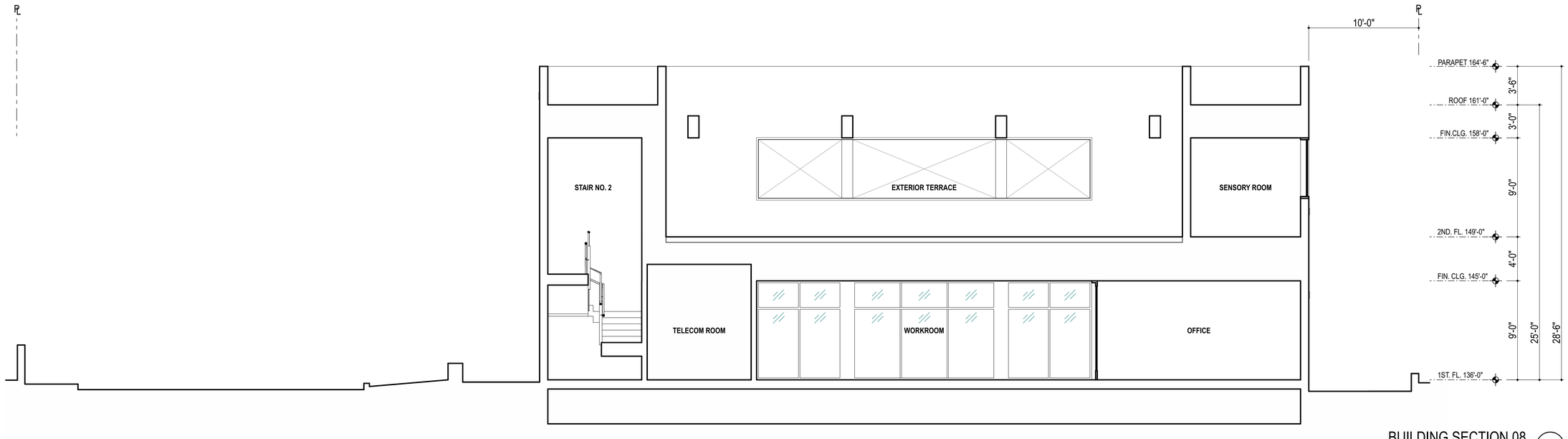

BUILDING SECTION 08 (2)
SCALE: 1/4" = 1'-0"

1' 4' 16'

PAUL MURDOCH ARCHITECTS

6310 SAN VICENTE BLVD. SUITE 400
LOS ANGELES, CA 90048
T. 310 358-0993

THE DRAWINGS AND SPECIFICATIONS AND IDEAS, DESIGNS, AND ARRANGEMENTS REPRESENTED THEREBY ARE AND SHALL REMAIN THE PROPERTY OF THE ARCHITECT AND NO PART THEREOF SHALL BE COPIED, DISCLOSED TO OTHERS, OR USED IN CONNECTION WITH ANY WORK OR PROJECT OTHER THAN THE SPECIFIC PROJECT FOR WHICH THEY HAVE BEEN PREPARED AND DEVELOPED WITHOUT THE WRITTEN CONSENT OF THE ARCHITECT. VISUAL CONTACT WITH THESE DRAWINGS OR SPECIFICATIONS SHALL CONSTITUTE CONCLUSIVE EVIDENCE OF ACCEPTANCE OF THESE RESTRCTIONS. WRITTEN DIMENSIONS ON THESE DRAWINGS SHALL HAVE PRECEDENCE OVER SCALED DIMENSIONS. CONTRACTORS SHALL VERIFY AND BE RESPONSIBLE FOR ALL DIMENSIONS AND CONDITIONS ON THE JOB AND THIS OFFICE MUST BE NOTIFIED OF ANY VARIATIONS FROM THE DIMENSIONS AND CONDITIONS SHOWN BY THESE DRAWINGS. SHOP DETAILS MUST BE SUBMITTED TO THIS OFFICE FOR REVIEW BEFORE PROCEEDING WITH FABRICATION.

NO.	DATE	REVISION

allcove
BEACH CITIES HEALTH DISTRICT

100% PRELIMINARY DESIGN SUBMITTAL

PMA PROJECT NO.
23007

DRAWING TITLE
BUILDING SECTION

SCALE
1/4" = 1'-0"

DATE
02/28/2024

DRAWN E.C. CHECKED P.M.

SHEET NO.
A304

3D MASSING - VIEW 03

3D MASSING - VIEW 01

3D MASSING - VIEW 04

3D MASSING - VIEW 02

PAUL MURDOCH
ARCHITECTS

6310 SAN VICENTE BLVD. SUITE 400
LOS ANGELES, CA 90048
T. 310 358-0993

THE DRAWINGS AND SPECIFICATIONS AND IDEAS, DESIGNS, AND ARRANGEMENTS REPRESENTED THEREBY ARE AND SHALL REMAIN THE PROPERTY OF THE ARCHITECT AND NO PART THEREOF SHALL BE COPIED, DISCLOSED TO OTHERS, OR USED IN CONNECTION WITH ANY WORK OR PROJECT OTHER THAN THE SPECIFIC PROJECT FOR WHICH THEY HAVE BEEN PREPARED AND DEVELOPED WITHOUT THE WRITTEN CONSENT OF THE ARCHITECT. VISUAL CONTACT WITH THESE DRAWINGS OR SPECIFICATIONS SHALL CONSTITUTE CONCLUSIVE EVIDENCE OF ACCEPTANCE OF THESE RESTRICTIONS. WRITTEN DIMENSIONS ON THESE DRAWINGS SHALL HAVE PRECEDENCE OVER SCALED DIMENSIONS. CONTRACTORS SHALL VERIFY AND BE RESPONSIBLE FOR ALL DIMENSIONS AND CONDITIONS ON THE JOB AND THIS OFFICE MUST BE NOTIFIED OF ANY VARIATIONS FROM THE DIMENSIONS AND CONDITIONS SHOWN BY THESE DRAWINGS. SHOP DETAILS MUST BE SUBMITTED TO THIS OFFICE FOR REVIEW BEFORE PROCEEDING WITH FABRICATION.

NO. DATE REVISION

allcove
BEACH CITIES
HEALTH DISTRICT

100% PRELIMINARY DESIGN SUBMITTAL

PMA PROJECT NO.
23007

DRAWING TITLE
3D VIEW

SCALE
N.T.S.

DATE
02/28/2024

DRAWN E.C. CHECKED P.M.

SHEET NO.
A401

3D MASSING - VIEW 07

3D MASSING - VIEW 05

3D MASSING - VIEW 08

3D MASSING - VIEW 06

PAUL MURDOCH
ARCHITECTS

6310 SAN VICENTE BLVD. SUITE 400
LOS ANGELES, CA 90048
T. 310 358-0993

THE DRAWINGS AND SPECIFICATIONS AND IDEAS, DESIGNS, AND ARRANGEMENTS REPRESENTED THEREBY ARE AND SHALL REMAIN THE PROPERTY OF THE ARCHITECT AND NO PART THEREOF SHALL BE COPIED, DISCLOSED TO OTHERS, OR USED IN CONNECTION WITH ANY WORK OR PROJECT OTHER THAN THE SPECIFIC PROJECT FOR WHICH THEY HAVE BEEN PREPARED AND DEVELOPED WITHOUT THE WRITTEN CONSENT OF THE ARCHITECT. VISUAL CONTACT WITH THESE DRAWINGS OR SPECIFICATIONS SHALL CONSTITUTE CONCLUSIVE EVIDENCE OF ACCEPTANCE OF THESE RESTRCTIONS. WRITTEN DIMENSIONS ON THESE DRAWINGS SHALL HAVE PRECEDENCE OVER SCALED DIMENSIONS. CONTRACTORS SHALL VERIFY AND BE RESPONSIBLE FOR ALL DIMENSIONS AND CONDITIONS ON THE JOB AND THIS OFFICE MUST BE NOTIFIED OF ANY VARIATIONS FROM THE DIMENSIONS AND CONDITIONS SHOWN BY THESE DRAWINGS. SHOP DETAILS MUST BE SUBMITTED TO THIS OFFICE FOR REVIEW BEFORE PROCEEDING WITH FABRICATION.

NO. DATE REVISION

allcove
BEACH CITIES
HEALTH DISTRICT

100% PRELIMINARY DESIGN SUBMITTAL

PMA PROJECT NO.
23007

DRAWING TITLE
3D VIEWS

SCALE
N.T.S.

DATE
02/28/2024

DRAWN E.C.
CHECKED P.M.

SHEET NO.
A402

3D MASSING - VIEW 11

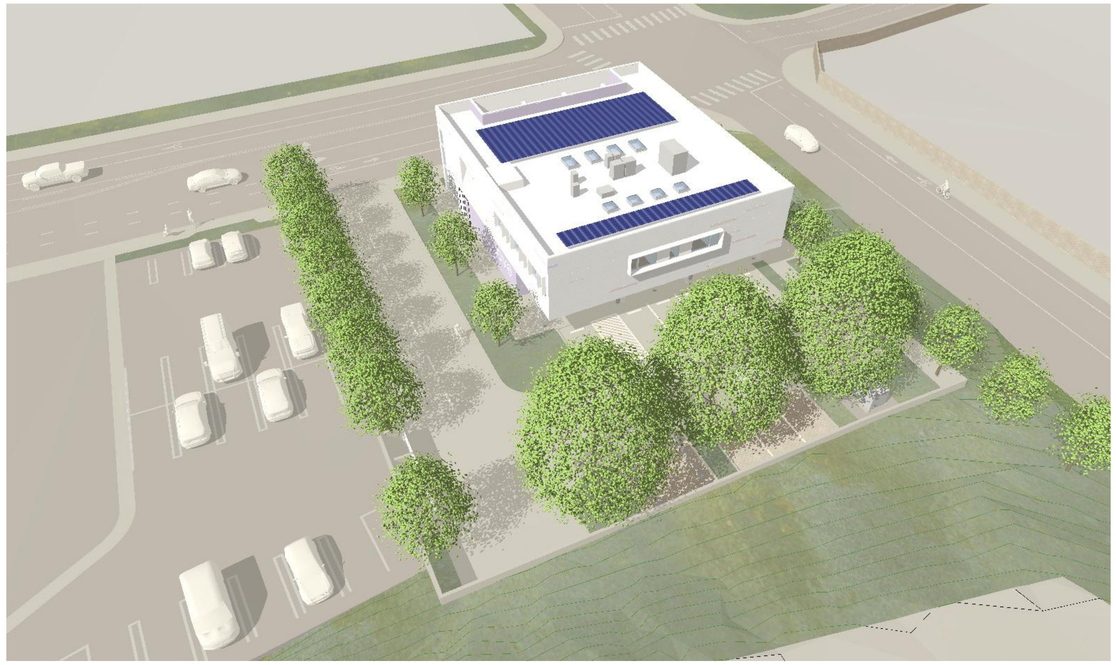

3D MASSING - VIEW 09

3D MASSING - VIEW 12

3D MASSING - VIEW 10

PAUL MURDOCH ARCHITECTS

6310 SAN VICENTE BLVD. SUITE 400
LOS ANGELES, CA 90048
T. 310 358-0993

THE DRAWINGS AND SPECIFICATIONS AND IDEAS, DESIGNS, AND ARRANGEMENTS REPRESENTED THEREBY ARE AND SHALL REMAIN THE PROPERTY OF THE ARCHITECT AND NO PART THEREOF SHALL BE COPIED, DISCLOSED TO OTHERS, OR USED IN CONNECTION WITH ANY WORK OR PROJECT OTHER THAN THE SPECIFIC PROJECT FOR WHICH THEY HAVE BEEN PREPARED AND DEVELOPED WITHOUT THE WRITTEN CONSENT OF THE ARCHITECT. VISUAL CONTACT WITH THESE DRAWINGS OR SPECIFICATIONS SHALL CONSTITUTE CONCLUSIVE EVIDENCE OF ACCEPTANCE OF THESE RESTRICTIONS. WRITTEN DIMENSIONS ON THESE DRAWINGS SHALL HAVE PRECEDENCE OVER SCALED DIMENSIONS. CONTRACTORS SHALL VERIFY AND BE RESPONSIBLE FOR ALL DIMENSIONS AND CONDITIONS ON THE JOB AND THIS OFFICE MUST BE NOTIFIED OF ANY VARIATIONS FROM THE DIMENSIONS AND CONDITIONS SHOWN BY THESE DRAWINGS. SHOP DETAILS MUST BE SUBMITTED TO THIS OFFICE FOR REVIEW BEFORE PROCEEDING WITH FABRICATION.

NO.	DATE	REVISION

allcove
BEACH CITIES HEALTH DISTRICT

100% PRELIMINARY DESIGN SUBMITTAL

PMA PROJECT NO.
23007

DRAWING TITLE
3D VIEWS

SCALE
N.T.S.

DATE
02/28/2024

DRAWN E.C. | CHECKED P.M.

SHEET NO.
A403

GENERAL NOTES

1. PLYWOOD STAIN COLORS NOT SHOWN. REFER TO A600 FOR STAIN COLORS. FINAL COLOR SELECTION FOR EACH CABINET SHALL BE BY OWNERS REPRESENTATIVE.
2. PROVIDE HARDWARE NOT SHOW.

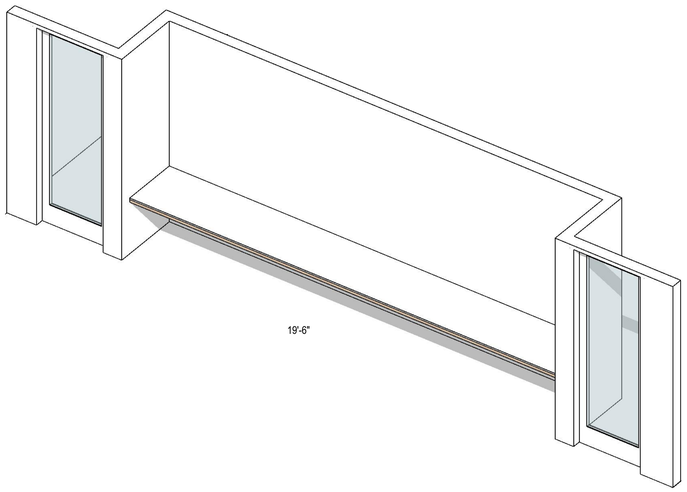

4 WORKSTATION COUNTERTOP MPR

COUNTERTOP SOLID SURFACE TOP W/ PROTRUDING BULLNOSE EDGE

BASE CABINETS
- 1 1/2" THICK x 24" DEEP FIN. PLYWOOD COUNTERTOP SUBSTRUCTURE
- PTD. STEEL IN-WALL / CONCEALED L-BRACKET
  - PROVIDE BRACKET SPACING AS REQUIRED

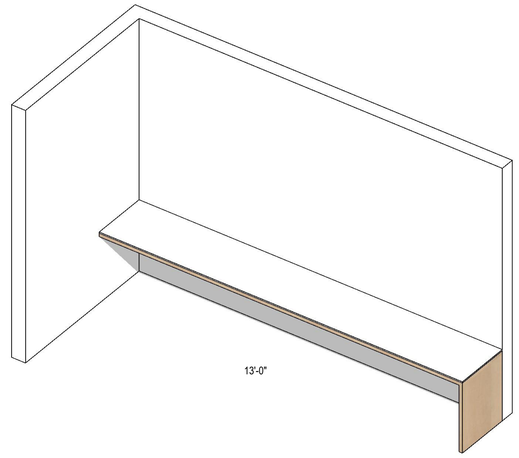

3 WORKSTATION COUNTERTOP LOBBY

COUNTERTOP SOLID SURFACE TOP W/ PROTRUDING BULLNOSE EDGE

BASE CABINETS
- 1 1/2" THICK FINISHED PLYWOOD COUNTERTOP SUBSTRUCTURE
- PTD. STEEL IN-WALL / CONCEALED L-BRACKET
  - PROVIDE BRACKET SPACING AS REQUIRED
- 1 1/2" THICK FINISHED PLYWOOD WATERFALL EDGE

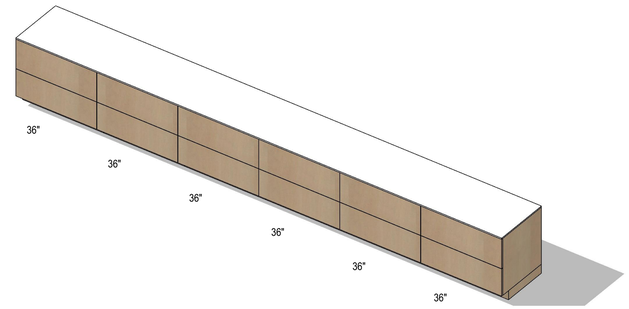

1 RECEPTION STORAGE CONSOLE

COUNTERTOP SOLID SURFACE TOP

BASE CABINETS
- SIX 36" WIDE x 24" DEEP x 29" HIGH BASE CABINETS
  - 2 LATERAL FILE DRAWERS

BASE / KICK
- 4" HIGH PLYWOOD KICK SET BACK 3" FROM FACE OF CABINET

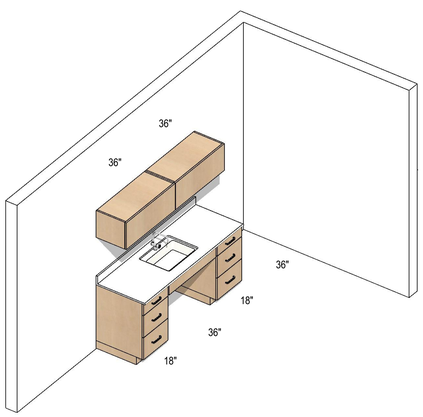

6 BREAKROOM CASEWORK

COUNTERTOP
- SOLID SURFACE TOP W/ PROTRUDING BULLNOSE FRONT EDGE
- SOLID SURFACE SPLASH 4" HIGH

BASE CABINETS
- TWO 18" WIDE x 24" DEEP x 33" HIGH CABINETS EITHER SIDE OF SINK
  - 6" HIGH TOP DRAWER + 2 EQ. DRAWERS BELOW
- 18" WIDE x 24" DEEP ACCESSIBLE CABINET W/ UNDERMOUNT SINK
  - 6" HIGH FIXTED PANEL AT FACE TO ALIGN W/ 6" HIGH DRAWER
  - PROVIDE ACCESSIBLE KNEE + TOE CLEARANCE AREA AT SINK
  - PROVIDE INSULATED EXPOSED PIPING

BASE / KICK
- 4" HIGH PLYWOOD KICK SET BACK 3" FROM FACE OF CABINET

WALL CABINETS
- TWO 36" WIDE x 14" DEEP x 14" HIGH WALL CABINETS
  - BASE OF CABINET +24" TO COUNTERTOP SURFACE
  - REFER TO ELEC. FOR UNDERCABINET LIGHTING

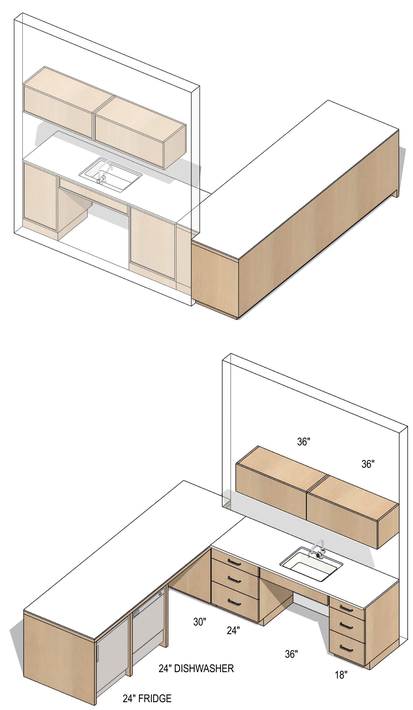

5 CAFE WORK + SERVICE COUNTER

COUNTERTOP
- SOLID SURFACE TOP W/ PROTRUDING BULLNOSE FRONT EDGE
- SOLID SURFACE SPLASH 4" HIGH

BASE CABINETS
- ONE 18" WIDE x 24" DEEP x 33" HIGH CABINET
- ONE 24" WIDE x 24" DEEP x 33" HIGH CABINET
  - 6" HIGH TOP DRAWER + 2 EQ. DRAWERS BELOW
- 18" WIDE x 24" DEEP ACCESSIBLE CABINET W/ UNDERMOUNT SINK
  - 6" HIGH FIXTED PANEL AT FACE TO ALIGN W/ 6" HIGH DRAWER
  - PROVIDE ACCESSIBLE KNEE + TOE CLEARANCE AREA AT SINK
  - PROVIDE INSULATED EXPOSED PIPING
- 1 1/2" THICK FINISHED PLYWOOD WATERFALL EDGE + INTERMEDIATE SUPPORTS

BASE / KICK
- 4" HIGH PLYWOOD KICK SET BACK 3" FROM FACE OF CABINET

WALL CABINETS
- TWO 36" WIDE x 14" DEEP x 14" HIGH WALL CABINETS
  - BASE OF CABINET +24" TO COUNTERTOP SURFACE
  - REFER TO ELEC. FOR UNDERCABINET LIGHTING

EQUIPMENT
- PROVIDE ONE 24" WIDE DISHWASHER
- PROVIDE ONE 24" WIDE UNDERCOUNTER REFRIGERATOR W/ GLASS DOOR
- COORDINATE REQUIREMENTS FOR: TOASTER OVEN AND INDUSTRIAL EXPRESSO MACHINE

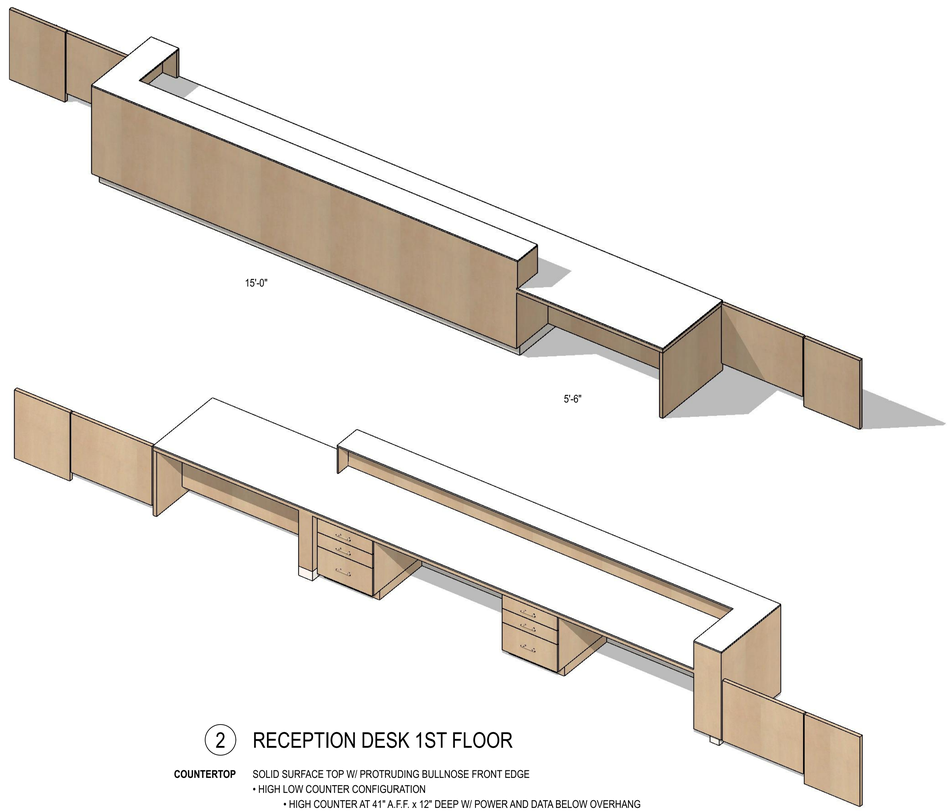

2 RECEPTION DESK 1ST FLOOR

COUNTERTOP SOLID SURFACE TOP W/ PROTRUDING BULLNOSE FRONT EDGE
- HIGH LOW COUNTER CONFIGURATION
  - HIGH COUNTER AT 41" A.F.F. x 12" DEEP W/ POWER AND DATA BELOW OVERHANG
  - LOW COUNTER AT 29" A.F.F. x 36" DEEP

BASE CABINETS
- 1 1/2" THICK FINISHED PLYWOOD COUNTERTOP SUBSTRUCTURE
- PLYWOOD SINISH INTERMEDIATE SUPPORT AS NEEDED
- TWO 36" WIDE x 24" DEEP x 25" HIGH BASE CABINETS
  - THREE DRAWERS, ONE LATERAL FILE DRAWER
- 1 1/2" THICK FINISHED PLYWOOD MODESTY PANEL AT ACCESSIBLE COUNTERTOP
- 1 1/2" THICK FINISHED PLYWOOD WATERFALL EDGE

BASE / KICK
- 4" HIGH PLYWOOD KICK SET BACK 3" FROM FACE OF CABINET

SWING GATES
- 1 1/2" THICK FINISHED PLYWOOD SWING GATRES WITH CONCEALED HINGES
- 1 1/2" THICK FINISHED PLYWOOD FIXED SIDELIGHT PANEL

PAUL MURDOCH ARCHITECTS

6310 SAN VICENTE BLVD. SUITE 400
LOS ANGELES, CA 90048
T. 310 358-0993

THE DRAWINGS AND SPECIFICATIONS AND IDEAS, DESIGNS, AND ARRANGEMENTS REPRESENTED THEREBY ARE AND SHALL REMAIN THE PROPERTY OF THE ARCHITECT AND NO PART THEREOF SHALL BE COPIED, DISCLOSED TO OTHERS, OR USED IN CONNECTION WITH ANY WORK OR PROJECT OTHER THAN THE SPECIFIC PROJECT FOR WHICH THEY HAVE BEEN PREPARED AND DEVELOPED WITHOUT THE WRITTEN CONSENT OF THE ARCHITECT. VISUAL CONTACT WITH THESE DRAWINGS OR SPECIFICATIONS SHALL CONSTITUTE CONCLUSIVE EVIDENCE OF ACCEPTANCE OF THESE RESTRCTIONS. WRITTEN DIMENSIONS ON THESE DRAWINGS SHALL HAVE PRECEDENCE OVER SCALED DIMENSIONS. CONTRACTORS SHALL VERIFY AND BE RESPONSIBLE FOR ALL DIMENSIONS AND CONDITIONS ON THE JOB AND THIS OFFICE MUST BE NOTIFIED OF ANY VARIATIONS FROM THE DIMENSIONS AND CONDITIONS SHOWN BY THESE DRAWINGS. SHOP DETAILS MUST BE SUBMITTED TO THIS OFFICE FOR REVIEW BEFORE PROCEEDING WITH FABRICATION.

NO.	DATE	REVISION

allcove
BEACH CITIES HEALTH DISTRICT

100% PRELIMINARY DESIGN SUBMITTAL

PMA PROJECT NO.
23007

DRAWING TITLE
CASEWORK 3D VIEWS AND NOTES FIRST FLOOR

SCALE

DATE
02/28/2024

DRAWN E.C. CHECKED P.M.

SHEET NO.
A501

GENERAL NOTES

1. PLYWOOD STAIN COLORS NOT SHOWN. REFER TO A600 FOR STAIN COLORS. FINAL COLOR SELECTION FOR EACH CABINET SHALL BE BY OWNERS REPRESENTATIVE.
2. PROVIDE HARDWARE NOT SHOW.

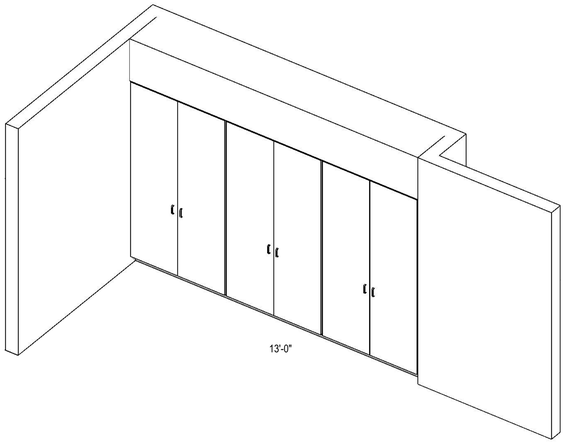

3 SNACK STATION PANTRY

CABINETS
- THREE 46" WIDE x 18" DEEP x 7'-0" HIGH CABINETS
  - 6 ADJUSTABLE SHELVES
  - STAINED PLYWOOD DOORS - FACE OF DOORS FLUSH WITH ADJACENT WALL SURFACE

BASE / KICK
- 4" HIGH STAINED PLYWOOD KICK SET BACK 3" FROM FACE OF CABINET

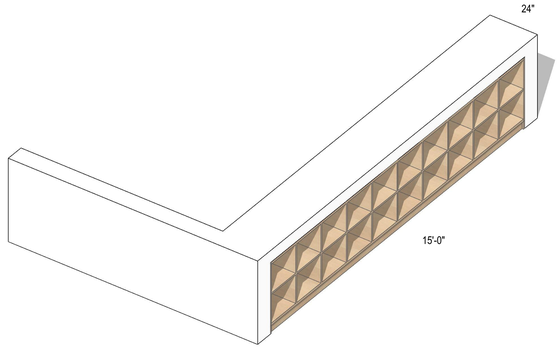

1 STORAGE CUBBIES AT STAIR NO. 1 GUARDRAIL

COUNTERTOP
- SOLID SURFACE TOP OVER 42" H. LOW GUARDRAIL WALL

BASE CABINETS
- 20 CUBBIES DOUBLE STACKED OPENINGS W/ 3/4" PLYWOOD DIVIDERS

BASE / KICK
- 4" HIGH PLYWOOD KICK SET BACK 3" FROM FACE OF CABINET

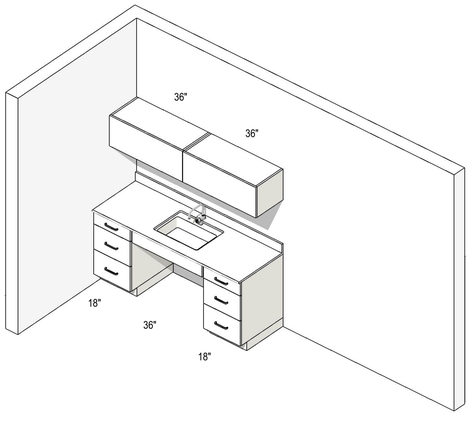

5 EXAM ROOM HEALTHCARE CASEWORK

COUNTERTOP
- SOLID SURFACE TOP W/ PROTRUDING BULLNOSE FRONT EDGE
- SOLID SURFACE SPLASH 4" HIGH

BASE CABINETS
- TWO 18" WIDE x 24" DEEP x 33" HIGH CABINETS EITHER SIDE OF SINK
  - 6" HIGH TOP DRAWER + 2 EQ. DRAWERS BELOW
- 18" WIDE x 24" DEEP ACCESSIBLE CABINET W/ UNDERMOUNT SINK
  - 6" HIGH FIXTED PANEL AT FACE TO ALIGN W/ 6" HIGH DRAWER
  - PROVIDE ACCESSIBLE KNEE + TOE CLEARANCE AREA AT SINK
  - PROVIDE INSULATED EXPOSED PIPING

BASE / KICK
- 4" HIGH KICK SET BACK 3" FROM FACE OF CABINET

WALL CABINETS
- TWO 36" WIDE x 14" DEEP x 14" HIGH WALL CABINETS
  - BASE OF CABINET +24" TO COUNTERTOP SURFACE
  - REFER TO ELEC. FOR UNDERCABINET LIGHTING

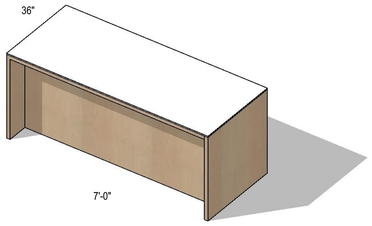

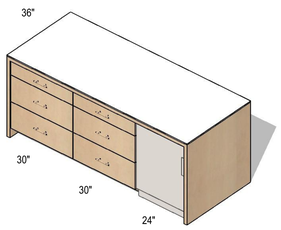

4 SNACK STATION ISLAND

COUNTERTOP
- SOLID SURFACE TOP W/ PROTRUDING BULLNOSE EDGE

BASE CABINETS
- TWO 24" WIDE x 24" DEEP x 33" HIGH CABINET
  - 6" HIGH TOP DRAWER + 2 EQ. DRAWERS BELOW
- 1 1/2" THICK FINISHED PLYWOOD WATERFALL EDGE AT ENDS

BASE / KICK
- 4" HIGH PLYWOOD KICK SET BACK 3" FROM FACE OF CABINET

EQUIPMENT
- PROVIDE ONE 24" WIDE UNDERCOUNTER REFRIGERATOR W/ GLASS DOOR
- COORDINATE REQUIREMENTS FOR CHARGING STATION
- COORDINATE REQUIREMENTS FOR: KEURIG MACHINE

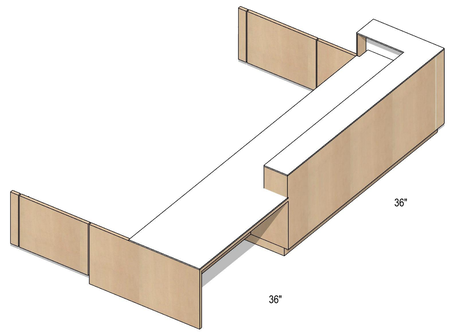

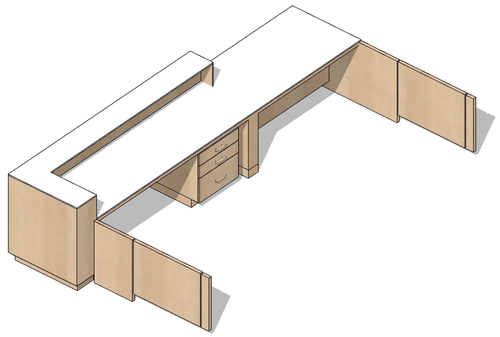

2 RECEPTION DESK 2ND FLOOR

COUNTERTOP
- SOLID SURFACE TOP W/ PROTRUDING BULLNOSE FRONT EDGE
- HIGH LOW COUNTER CONFIGURATION
  - HIGH COUNTER AT 41" A.F.F. x 12" DEEP W/ POWER AND DATA BELOW OVERHANG
  - LOW COUNTER AT 29" A.F.F. x 36" DEEP

BASE CABINETS
- 1 1/2" THICK FINISHED PLYWOOD COUNTERTOP SUBSTRUCTURE
- PLYWOOD SINISH INTERMEDIATE SUPPORT AS NEEDED
- ONE 36" WIDE x 24" DEEP x 25" HIGH BASE CABINETS
  - THREE DRAWERS, ONE LATERAL FILE DRAWER
- 1 1/2" THICK FINISHED PLYWOOD MODESTY PANEL AT ACCESSIBLE COUNTERTOP
- 1 1/2" THICK FINISHED PLYWOOD WATERFALL EDGE

BASE / KICK
- 4" HIGH PLYWOOD KICK SET BACK 3" FROM FACE OF CABINET

SWING GATES
- 1 1/2" THICK FINISHED PLYWOOD SWING GATRES WITH CONCEALED HINGES
- 1 1/2" THICK FINISHED PLYWOOD FIXED SIDELIGHT PANEL

PAUL MURDOCH ARCHITECTS

6310 SAN VICENTE BLVD. SUITE 400
LOS ANGELES, CA 90048
T. 310 358-0993

THE DRAWINGS AND SPECIFICATIONS AND IDEAS, DESIGNS, AND ARRANGEMENTS REPRESENTED THEREBY ARE AND SHALL REMAIN THE PROPERTY OF THE ARCHITECT AND NO PART THEREOF SHALL BE COPIED, DISCLOSED TO OTHERS, OR USED IN CONNECTION WITH ANY WORK OR PROJECT OTHER THAN THE SPECIFIC PROJECT FOR WHICH THEY HAVE BEEN PREPARED AND DEVELOPED WITHOUT THE WRITTEN CONSENT OF THE ARCHITECT. VISUAL CONTACT WITH THESE DRAWINGS OR SPECIFICATIONS SHALL CONSTITUTE CONCLUSIVE EVIDENCE OF ACCEPTANCE OF THESE RESTRCTIONS. WRITTEN DIMENSIONS ON THESE DRAWINGS SHALL HAVE PRECEDENCE OVER SCALED DIMENSIONS. CONTRACTORS SHALL VERIFY AND BE RESPONSIBLE FOR ALL DIMENSIONS AND CONDITIONS ON THE JOB AND THIS OFFICE MUST BE NOTIFIED OF ANY VARIATIONS FROM THE DIMENSIONS AND CONDITIONS SHOWN BY THESE DRAWINGS. SHOP DETAILS MUST BE SUBMITTED TO THIS OFFICE FOR REVIEW BEFORE PROCEEDING WITH FABRICATION.

NO. DATE REVISION

allcove
BEACH CITIES HEALTH DISTRICT

100% PRELIMINARY DESIGN SUBMITTAL

PMA PROJECT NO.
23007

DRAWING TITLE
CASEWORK 3D VIEWS AND NOTES SECOND FLOOR

SCALE

DATE
02/28/2024

DRAWN E.C. CHECKED P.M.

SHEET NO.
A502

WINDOW SCHEDULE

DOOR #	ROOM NAME	DOOR					NOTES
		MATERIAL	FINISH	GLASS	WIDTH	HEIGHT	
W100	WORK ROOM	AL	MP	GL-1	7'-9"	9'-0"	2
W101	WORK ROOM	AL	MP	GL-1	13'-0"	9'-0"	2
W102	WORK ROOM	AL	MP	GL-1	7'-9"	9'-0"	2
W103	STAIR NO. 2	AL	MP	GL-1	3'-0"	9'-0"	
W104	OFFICE	AL	MP	GL-1	3'-0"	9'-0"	1
W105	BREAKROOM	AL	MP	GL-1	3'-0"	9'-0"	1
W106	CAFE	AL	MP	GL-1	8'-9"	9'-0"	1
W201	STAIR NO. 2	AL	MP	GL-1	3'-0"	13'-0"	
W202	SENSORY ROOM	AL	MP	GL-1	8'-8"	5'-6"	1
W203	THE COVE	AL	MP	GL-1	5'-6"	5'-6"	2
W204	GROUP ROOM	AL	MP	GL-1	31'-3"	5'-6"	1
W205	CHAT ROOM	AL	MP	GL-1	54'-5"	5'-6"	1
W206	PRIVACY ROOM	AL	MP	GL-1	27'-0"	5'-6"	1

NOTES:

1. OPERABLE CASEMENT WINDOW(S)
2. OPERABLE TRANSOM WINDOW(S)

MATERIAL LEGEND

DOOR CONSTRUCTION

HM HOLLOW METAL
AL ALUMINUM
SC SOLID CORE WOOD

FACING AND FINISH

AP FACTORY FINISH
MP METAL, PAINTED
PL PLASTIC LAMINATE

FRAME CONSTRUCTION

AL ALUMINUM
HM HOLLOW METAL

GLASS

GL-1 1" INSULATED TEMPERED GLASS
GL-2 5/16" TEMPERED LAMINATED GLASS

DOOR SCHEDULE

DOOR #	ROOM NAME	DOOR						FRAME		NOTES
		MATERIAL	FINISH	WIDTH	HEIGHT	THICKNESS	GLASS	MATERIAL	FINISH	
D100	INTAKE	AL	MP	5'-11 1/2"	8'-10"	1 3/4"	GL-1	AL	MP	
D102	CAFE	AL	MP	3'-0"	8'-10"	1 3/4"	GL-1	AL	MP	
D103A	LARGE GROUP ROOM	AL	MP	3'-0"	8'-10"	1 3/4"	GL-1	AL	MP	
D103B	LARGE GROUP ROOM	AL	MP	3'-0"	8'-10"	1 3/4"	GL-1	AL	MP	
D103C	LARGE GROUP ROOM	AL	MP	19'-0"	8'-10"	1 3/4"	GL-1	AL	MP	
D103D	LARGE GROUP ROOM	SC	PL	3'-0"	8'-10"	1 3/4"	GL-1	HM	MP	
D103E	LARGE GROUP ROOM	SC	PL	3'-0"	8'-10"	1 3/4"	GL-1	HM	MP	
D104	STAIR NO. 1	AL	MP	3'-0"	8'-10"	1 3/4"	GL-1	AL	MP	
D106A	RECEPTION DESK	SC	PL	3'-0"	8'-10"	1 3/4"	GL-2	HM	MP	
D106B	RECEPTION DESK	SC	PL	3'-0"	8'-10"	1 3/4"	GL-2	HM	MP	
D106C	STAIR NO. 2	HM	MP	3'-0"	8'-10"	1 3/4"	GL-2	HM	MP	
D108	BREAKROOM	SC	PL	3'-0"	8'-10"	1 3/4"	GL-2	HM	MP	
D109	OFFICE	SC	PL	3'-0"	8'-10"	1 3/4"	GL-2	HM	MP	
D110	STORAGE	SC	PL	8'-0"	8'-10"	1 3/4"	-	HM	MP	
D111	WORKSTATIONS	SC	PL	3'-0"	8'-10"	1 3/4"	-	HM	MP	
D112	ELECTRICAL ROOM	HM	MP	3'-6"	8'-10"	1 3/4"	-	HM	MP	
D113	TELECOM ROOM	SC	PL	3'-0"	8'-10"	1 3/4"	-	HM	MP	
D114	FIRE RISER	HM	MP	3'-0"	8'-10"	1 3/4"	-	HM	MP	
D115	MECH ROOM	HM	MP	3'-0"	8'-10"	1 3/4"	-	HM	MP	
D116	STAIR NO. 2	HM	MP	3'-0"	8'-10"	1 3/4"	-	HM	MP	
D117	UNISEX RESTROOM	SC	PL	3'-0"	8'-10"	1 3/4"	-	HM	MP	
D118	UNISEX RESTROOM	SC	PL	3'-0"	8'-10"	1 3/4"	-	HM	MP	
D200A	EXTERIOR TERRACE	AL	MP	3'-0"	8'-10"	1 3/4"	GL-1	AL	MP	
D200B	EXTERIOR TERRACE	AL	MP	3'-0"	8'-10"	1 3/4"	GL-1	AL	MP	
D201A	EXTERIOR TERRACE	AL	MP	8'-0"	8'-10"	1 3/4"	GL-1	AL	MP	
D201B	EXTERIOR TERRACE	AL	MP	8'-0"	8'-10"	1 3/4"	GL-1	AL	MP	
D201C	EXTERIOR TERRACE	AL	MP	8'-0"	8'-10"	1 3/4"	GL-1	AL	MP	
D204	EXAM ROOM	SC	PL	3'-0"	8'-10"	1 3/4"	-	HM	MP	
D206	GROUP ROOM	SC	PL	3'-0"	8'-10"	1 3/4"	GL-2	HM	MP	
D207	CHAT ROOM	SC	PL	3'-0"	8'-10"	1 3/4"	GL-2	HM	MP	
D208	CHAT ROOM	SC	PL	3'-0"	8'-10"	1 3/4"	GL-2	HM	MP	
D209	CHAT ROOM	SC	PL	3'-0"	8'-10"	1 3/4"	GL-2	HM	MP	
D210	PRIVACY ROOM	SC	PL	3'-0"	8'-10"	1 3/4"	-	HM	MP	
D211	CHAT ROOM	SC	PL	3'-0"	8'-10"	1 3/4"	GL-2	HM	MP	
D212	CHAT ROOM	SC	PL	3'-0"	9'-0"	1 3/4"	GL-2	HM	MP	
D213	CHAT ROOM	SC	PL	3'-0"	8'-10"	1 3/4"	GL-2	HM	MP	
D214	GROUP ROOM	SC	PL	3'-0"	8'-10"	1 3/4"	GL-2	HM	MP	
D215	CLEAN ROOM	SC	PL	3'-0"	8'-10"	1 3/4"	-	HM	MP	
D216	SOILD ROOM	SC	PL	3'-0"	8'-0"	1 3/4"	-	HM	MP	
D217	STORAGE	SC	PL	3'-0"	8'-0"	1 3/4"	-	HM	MP	
D218	JANITOR ROOM	SC	PL	3'-0"	8'-0"	1 3/4"	-	HM	MP	
D219	UNISEX RESTROOM	HM	MP	3'-0"	8'-0"	1 3/4"	-	HM	MP	
D220	UNISEX RESTROOM	HM	MP	3'-0"	8'-0"	1 3/4"	-	HM	MP	
D221	THE COVE	SC	PL	3'-0"	8'-10"	1 3/4"	-	HM	MP	
D222	STAIR NO. 2	SC	PL	3'-0"	8'-0"	1 3/4"	GL-2	HM	MP	

GENERAL NOTES

1. ALL AL. FRAMES, LOUVERS, H.M. FRAMES + DOORS TO BE PAINTED TO MATCH ADJACENT WALL COLOR U.N.O.
2. PAINTED FRAMES + LOUVERS TO BE EGGSHELL PAINT FINISH.
3. PROVIDE AL. SCREENS AT ALL OPERABLE WINDOWS.
4. PROVIDE CODE REQUIRED ACCESSORIES AT ALL RESTROOMS.
5. SUBMIT SAMPLES AND/OR MOCKUPS FOR FINAL COLOR SELECTIONS BY OWNER'S REPRESENTATIVE, TYP.

COLOR LEGEND

WOOD STAIN COLORS

MINWAX WATER-BASED SOLID STAIN
C1 MW 1010 HONEYDEW
C2 MW1098 NATURAL PEACH
C3 MW 1167 WOODROSE
C4 MW1225 BLUE HAWAII
C5 MW1168 WISTERIA

HEALTH CARE CASEWORK (EXAM ROOM)

FORMICA PLASTIC LAMINATE
1196 PURPLE DYE

SOLID SURFACE COLORS

CORIAN
CAMEO WHITE

RUBBER STAIR TREAD FINISH COLOR

MOHAWK COLORWAYS
COLOR: MERRIGOLD 241

COLUMN COVERS

PAC-CLAD
WHITE, MATTE

WOOD DOORS PLASTIC LAMINATE

WHITE TO MATCH ADJACENT WALL

CURTAINWALL FRAMES

BONE WHITE - KYNAR
CUSTOM COLOR TO MATCH C5 SHINGLE

GYPSUM BOARD - PAINT

SW 7005 PURE WHITE - SHERWIN WILLIAMS

CEMENT PLASTER - PAINT

SW 7005 PURE WHITE - SHERWIN WILLIAMS
CUSTOM COLOR TO MATCH C5 SHINGLE

FELT WALL COVERING

SELECTIONS PER OWNER'S REP.
FILZFELT

MATERIAL LEGEND

FLOOR MATERIAL

FG FOOT GRILL
LVT LUXURY VINYL TILE
CPT CARPET TILE
CONC CONCRETE SEALED
SDT STATIC DISSIPATIVECOATING ON CONC.
QT QUARRY TILE, UNGLAZED, SEALED
PP PEDESTAL PAVERS
RFF RUBBER FLOOR FINISH

BASE MATERIAL

RB RUBBER BASE
QTB QUARRY TILE COVE BASE

WALL FINISH

GB PTD. GYPSUM BOARD
WP ACOUSTICAL WALL PANEL
PW FIRE-RETARDANT TREATED PLYWOOD

CEILING MATERIAL

GB PTD. GYPSUM BOARD
ACT ACOUSTICAL CEILING TILES
AT ACOUSTICAL TILE - DIRECT MOUNT

PAINT FINISH CODE LIST

PAINT

P1.1 WHITE - SEMIGLOSS
P1.2 WHITE - EGG SHELL
P2.1 CEILING WHITE - SEMIGLOSS
P2.2 CEILING WHITE - EGG SHELL
P3.1 MATCH SHINGLE C5 - EGGSHELL

FINISH SCHEDULE

NO.	ROOM NAME	FLOOR		WALL FINISH				CEILING		NOTES
		MATERIAL	BASE	NORTH	SOUTH	EAST	WEST	MATERIAL	HEIGHT	
A100	INTAKE	FG	RB	-	-	GB (P1.1)	GB (P1.1)	GB (P2.1)	9'-0"	
A101	LOBBY + RECEPTION	LVT	RB	-	GB (P1.1) + WP	-	-	GB (P2.1) + AT	9'-0"	
A102	LARGE GROUP ROOM	LVT	RB	GB (P1.1) + WP	GB (P1.1)	GB (P1.1)	GB (P1.1) + WP	GB (P2.1) + AT	9'-0"	
A103	CAFE	LVT	RB	GB (P1.1)	GB (P1.1)	GB (P1.1)	GB (P1.1)	GB (P2.1)	9'-0"	
A104	WORKSTATIONS	LVT	RB	GB (P1.1) + WP	-	-	GB (P1.1)	GB (P2.1)	9'-0"	
A105	RECEPTION DESK	LVT	RB	GB (P1.1) + WP	-	GB (P1.1)	GB (P1.1)	GB (P2.1)	9'-0"	
A106	WORK ROOM	CPT	RB	-	GB (P1.1)	GB (P1.1)	GB (P1.1)	ACT	9'-0"	
A107	PRINT	LVT	RB	-	GB (P1.1)	-	-	ACT	9'-0"	
A108	BREAKROOM	LVT	RB	GB (P1.2)	GB (P1.2)	GB (P1.2)	GB (P1.2)	GB (P2.2)	9'-0"	1+2
A109	OFFICE	CPT	RB	GB (P1.1)	GB (P1.1)	GB (P1.1)	GB (P1.1)	ACT	9'-0"	
A110	STORAGE	LVT	RB	GB (P1.2)	GB (P1.2)	GB (P1.2)	GB (P1.2)	GB (P2.2)	9'-0"	
A111	ELEV. ROOM	CONC	RB	GB (P1.1)	GB (P1.1)	GB (P1.1)	GB (P1.1)	(P2.2)	-	
A112	ELECTRICAL ROOM	CONC	RB	GB (P1.1) + PW	GB (P1.1) + PW	GB (P1.1) + PW	GB (P1.1) + PW	(P2.2)	-	
A113	TELECOM ROOM	SDT	RB	GB (P1.1) + PW	GB (P1.1) + PW	GB (P1.1) + PW	GB (P1.1) + PW	(P2.2)	-	
A114	FIRE RISER	CONC	RB	GB (P1.1)	GB (P1.1)	GB (P1.1)	GB (P1.1)	(P2.2)	-	
A115	MECH ROOM	CONC	RB	GB (P1.1)	GB (P1.1)	GB (P1.1)	GB (P1.1)	(P2.2)	-	
A116	STAIR NO. 1	RFF	RB	GB (P1.1)	GB (P1.1)	GB (P1.1)	GB (P1.1)	GB (P2.1)	9'-0"	
A116	STAIR NO. 1	RFF	RB	GB (P1.1)	GB (P1.1)	GB (P1.1)	GB (P1.1)	GB (P2.1)	9'-0"	
A116	STAIR NO. 2	CONC	RB	GB (P1.1)	GB (P1.1)	GB (P1.1)	GB (P1.1)	GB (P2.1)	9'-0"	
A117	UNISEX RESTROOM	QT	QTB	SSF	SSF	SSF	SSF	GB (P2.2)	9'-0"	
A118	UNISEX RESTROOM	QT	QTB	SSF	SSF	SSF	SSF	GB (P2.2)	9'-0"	
A200	EXTERIOR TERRACE	PP		PL (P3.1)	PL (P3.1)	PL (P3.1)	PL (P3.1)	-	-	
A201	THE COVE	LVT	RB	GB (P1.1)	-	GB (P1.1)	GB (P1.1)	GB (P2.1) + AT	9'-0"	2
A202	RECEPTION	LVT	RB	-	GB (P1.1) + WP	-	-	GB (P2.1)	-	
A203	COMMUNITY WALL	LVT	RB	GB (P1.1)	GB (P1.1)	GB (P1.1)	GB (P1.1)	GB (P2.1)	-	
A204	EXAM ROOM	LVT	RB	GB (P1.2) + WP	GB (P1.2)	GB (P1.2)	GB (P1.2) + WP	GB (P2.2) + AT	9'-0"	
A205	SENSORY ROOM	LVT	RB	GB (P1.1) + WP	GB (P1.1)	GB (P1.1) + WP	GB (P1.1)	GB (P2.1)	9'-0"	
A206	GROUP ROOM	LVT	RB	GB (P1.1) + WP	GB (P1.1)	GB (P1.1)	GB (P1.1) + WP	GB (P2.1) + AT	9'-0"	1
A207	CHAT ROOM	LVT	RB	GB (P1.1) + WP	GB (P1.1)	GB (P1.1)	GB (P1.1) + WP	GB (P2.1) + AT	9'-0"	
A208	CHAT ROOM	LVT	RB	GB (P1.1)	GB (P1.1) + WP	GB (P1.1)	GB (P1.1) + WP	GB (P2.1) + AT	9'-0"	
A209	CHAT ROOM	LVT	RB	GB (P1.1) + WP	GB (P1.1)	GB (P1.1) + WP	GB (P1.1)	GB (P2.1) + AT	9'-0"	
A210	PRIVACY ROOM	LVT	RB	GB (P1.1) + WP	GB (P1.1)	GB (P1.1) + WP	GB (P1.1)	GB (P2.1) + AT	9'-0"	
A211	CHAT ROOM	LVT	RB	GB (P1.1) + WP	GB (P1.1)	GB (P1.1)	GB (P1.1) + WP	GB (P2.1) + AT	9'-0"	
A212	CHAT ROOM	LVT	RB	GB (P1.1)	GB (P1.1) + WP	GB (P1.1) + WP	GB (P1.1)	GB (P2.1) + AT	9'-0"	
A213	CHAT ROOM	LVT	RB	GB (P1.1) + WP	GB (P1.1)	GB (P1.1) + WP	GB (P1.1)	GB (P2.1) + AT	9'-0"	
A214	GROUP ROOM	LVT	RB	GB (P1.1) + WP	GB (P1.1)	GB (P1.1) + WP	GB (P1.1)	GB (P2.1) + AT	9'-0"	1
A215	CLEAN ROOM	LVT	RB	GB (P1.2)	GB (P1.2)	GB (P1.2)	GB (P1.2)	GB (P2.2)	9'-0"	
A216	SOILD ROOM	LVT	RB	GB (P1.2)	GB (P1.2)	GB (P1.2)	GB (P1.2)	GB (P2.2)	9'-0"	
A217	STORAGE	LVT	RB	GB (P1.2)	GB (P1.2)	GB (P1.2)	GB (P1.2)	GB (P2.2)	9'-0"	
A218	JANITOR ROOM	CONC	QTB	GB (P1.2)	GB (P1.2)	GB (P1.2)	GB (P1.2)	GB (P2.2)	9'-0"	
A219	UNISEX RESTROOM	QT	QTB	SSF	SSF	SSF	SSF	GB (P2.2)	9'-0"	
A220	UNISEX RESTROOM	QT	QTB	SSF	SSF	SSF	SSF	GB (P2.2)	9'-0"	
A222	STAIR NO. 2	CONC.	RB	GB (P1.1)	GB (P1.1)	GB (P1.1)	GB (P1.1)	GB (P2.1)	9'-0"	

NOTES:

1. PROVIDE WALL-MOUNTED MARKERBOARD
2. PROVIDE WALL-MOUNTED TACK BOARD

PAUL MURDOCH ARCHITECTS

6310 SAN VICENTE BLVD. SUITE 400
LOS ANGELES, CA 90048
T. 310 358-0993

THE DRAWINGS AND SPECIFICATIONS AND IDEAS, DESIGNS, AND ARRANGEMENTS REPRESENTED THEREBY ARE AND SHALL REMAIN THE PROPERTY OF THE ARCHITECT AND NO PART THEREOF SHALL BE COPIED, DISCLOSED TO OTHERS, OR USED IN CONNECTION WITH ANY WORK OR PROJECT OTHER THAN THE SPECIFIC PROJECT FOR WHICH THEY HAVE BEEN PREPARED AND DEVELOPED WITHOUT THE WRITTEN CONSENT OF THE ARCHITECT. VISUAL CONTACT WITH THESE DRAWINGS OR SPECIFICATIONS SHALL CONSTITUTE CONCLUSIVE EVIDENCE OF ACCEPTANCE OF THESE RESTRCTIONS. WRITTEN DIMENSIONS ON THESE DRAWINGS SHALL HAVE PRECEDENCE OVER SCALED DIMENSIONS. CONTRACTORS SHALL VERIFY AND BE RESPONSIBLE FOR ALL DIMENSIONS AND CONDITIONS ON THE JOB AND THIS OFFICE MUST BE NOTIFIED OF ANY VARIATIONS FROM THE DIMENSIONS AND CONDITIONS SHOWN BY THESE DRAWINGS. SHOP DETAILS MUST BE SUBMITTED TO THIS OFFICE FOR REVIEW BEFORE PROCEEDING WITH FABRICATION.

NO. DATE REVISION

allcove
BEACH CITIES HEALTH DISTRICT

100% PRELIMINARY DESIGN SUBMITTAL

PMA PROJECT NO.
23007

DRAWING TITLE
DOOR, WINDOW AND FINISH SCHEDULE

SCALE

DATE
02/28/2024

DRAWN E.C. CHECKED P.M.

SHEET NO.
A600

GENERAL NOTES

COMMON

1. FURNISH ALL LABOR, MATERIALS, SERVICES, EQUIPMENT AND APPLIANCES REQUIRED FOR THE RENOVATION OF EXISTING MECHANICAL SYSTEMS INCLUDING HVAC SYSTEMS, PLUMBING, AND MISCELLANEOUS SYSTEMS AS INDICATED.
2. COMPLY WITH THE FOLLOWING CODES:
   - A. 2022 CALIFORNIA BUILDING CODE (CBC)
   - B. 2022 CALIFORNIA PLUMBING CODE (CPC)
   - C. 2022 CALIFORNIA MECHANICAL CODE (CMC)
   - D. 2022 CALIFORNIA ELECTRICAL CODE (CEC).
   - E. 2022 CALIFORNIA BUILDING ENERGY EFFICIENCY STANDARDS (CEC)
   - F. ALL OTHER APPLICABLE STATE AND LOCAL CODES APPLYING TO THE PROPOSED CONSTRUCTION.
3. ITEMS MARKED (N) OR SHOWN DARK ARE NEW. ITEMS MARKED (E) OR SHOWN LIGHT ARE EXISTING TO REMAIN. DIAGONALLY HATCHED ITEMS INDICATE EXISTING ITEMS TO BE DEMOLISHED.PROVIDE ALL SAFETY DEVICES, SUPPORTS, MISCELLANEOUS STEEL, WELDING, FLASHING, ETC. AND PROVISIONS AS NECESSARY.
4. ALL MATERIALS SHALL BE FABRICATED AND INSTALLED IN A NEAT AND WORKMAN LIKE MANNER WITH THE COORDINATION OF ALL INVOLVED TRADES.
5. "OR EQUAL" MEANS EQUIVALENT OR SUPERIOR IN PERFORMANCE, MATERIALS, WORKMANSHIP AND APPEARANCE TO THOSE SPECIFIED.
6. PROVIDE ALL REQUIRED SUBMITTALS FOR REVIEW.
7. INSTALLING CONTRACTOR SHALL OBTAIN AND PAY FOR ALL PERMITS AND LICENSES REQUIRED BY ANY GOVERNING AUTHORITY OR LOCAL MUNICIPALITY FOR HIS PORTION OF THE WORK.
8. PROVIDE ACCESS DOORS FOR DAMPERS, VALVES, ETC. WHERE WALLS OR CEILINGS MUST BE PENETRATED TO ACCESS MECHANICAL EQUIPMENT.
9. THESE DRAWINGS ARE DIAGRAMMATIC AND INDICATE THE GENERAL ARRANGEMENT OF COMPONENTS AND THEIR RELATED CONNECTIONS. PATHWAY PLACEMENT IS ONLY REPRESENTATIVE OF A GENERAL LOCATION UNLESS INDICATED OTHERWISE BY DIMENSIONS. SYMBOLS ARE USED EXTENSIVELY WHICH MAY NOT EXACTLY REPRESENT ACTUAL SIZES. THE DRAWINGS DO NOT SHOW ALL OFFSETS, TRANSITIONS AND DEVICES NECESSARY FOR A COMPLETE AND FUNCTIONAL SYSTEM AS REQUIRED BY THE CONTRACT DOCUMENTS. IT IS THE RESPONSIBILITY OF THE CONTRACTOR TO PLACE THESE COMPONENTS SUCH THAT THEY OFFER FULL FUNCTIONALITY WITHOUT HINDRANCE FROM HVAC, PLUMBING, ELECTRICAL AND OTHER BUILDING SYSTEMS
10. ALL DIMENSIONS ARE INSIDE NET FREE AREA.
11. COORDINATE ALL CONSTRUCTION ACTIVITIES WITH OWNER PRIOR BEGINNING WORK. GIVE OWNER SUFFICIENT NOTICE OF INTERRUPTIONS AND DURATION OF ACTIVITIES OR SHUTDOWNS. ALL SHUTDOWNS SHALL BE AT THE CONVENIENCE OF THE OWNER AND SHALL NOT RESULT IN CONSTRUCTION DELAYS OR ADDITIONAL COSTS TO THE OWNER. PROVIDE ALL OVERTIME OR AFTERHOURS WORK AS REQUIRED.
12. EXAMINE ALL EXISTING CONDITIONS RELATED TO THE INSTALLATION OF NEW AND RENOVATED SYSTEMS INCLUDING, BUT NOT LIMITED TO, ACCESS REQUIREMENTS, UTILITY SERVICE CONNECTIONS, CONSTRUCTION MATERIALS, HAZARDS, CODE VIOLATIONS, SCHEDULING OF WORK, OR ANY CONDITION THAT AFFECTS EITHER THE CONSTRUCTION SCHEDULE OR COST. THE OWNER SHALL NOT BE RESPONSIBLE FOR ADDITIONAL COSTS ARISING FROM CONDITIONS WHICH ARE OBSERVABLE OR COULD BE REASONABLY EXPECTED BUT WHICH MAY NOT BE SPECIFICALLY MENTIONED.
13. INSTALLING CONTRACTOR TO SURVEY SITE AND STUDY COMPLETE ARCHITECTURAL PLANS PRIOR TO SUBMITTING BID. CONTRACTOR SHALL BE RESPONSIBLE TO GENERATE SHOP DRAWING DETAILS OMITTED ON PLANS WHICH MAY BE REQUIRED IN THE FIELD.
14. AIR BALANCE, INCLUDING OUTSIDE AIR, SHALL BE PERFORMED BY A CERTIFIED NEBB OR AABC AIR BALANCE PROFESSIONAL TO THE SPECIFICATIONS STATED ON THE PLANS. A COPY OF THE CERTIFIED REPORT SHALL BE PRESENTED TO THE BUILDING INSPECTOR PRIOR TO THE FINAL APPROVAL.

EQUIPMENT

1. MANUFACTURER SERVICE CLEARANCE FOR ALL EQUIPMENT SHALL BE MAINTAINED. DO NOT LOCATE PLENUM MOUNTED EQUIPMENT ABOVE WALLS. RELOCATE FIRE SPRINKLER PIPING, CONDUIT AND OTHER OBSTRUCTIONS AS NECESSARY TO MAINTAIN SERVICE CLEARANCES. THE REQUIRED SERVICE DISTANCE FROM MECHANICAL EQUIPMENT TO SCREENING, PARAPETS, WALLS, AND OTHER EQUIPMENT SHALL BE A MINIMUM OF 30"X30" ON THE SERVICE SIDE OF THE EQUIPMENT, OR AS REQUIRED BT THE MANUFACTURER'S INSTALLATION INSTRUCTIONS, IF THE INSTRUCTIONS REQUIRE A GREATER CLEARANCE.
2. CLEARANCES AROUND EQUIPMENT SHOWN IN THESE PLANS SHALL BE CONSIDERED DIAGRAMMATIC UNLESS NOTED OTHERWISE. IN THE CASE THAT CLEARANCES INDICATED ON THESE PLANS DO NOT MEET OR EXCEED THE MANUFACTURER'S RECOMMENDATIONS, SUCH INSTANCES SHALL BE BROUGHT TO THE ATTENTION OF THE ENGINEER PRIOR TO INSTALLATION.

AIR DISTRIBUTION

1. DURING CONSTRUCTION, ENDS OF DUCT OPENINGS ARE TO BE SEALED, AND MECHANICAL EQUIPMENT IS TO BE COVERED.
2. FLEXIBLE DUCTWORK SHALL BE ACOUSTICAL LOW PRESSURE TYPE WITH INTERIOR LINER, METAL HELIX, 1" FIBERGLASS INSULATION, AND COPOLYMER SEAMLESS, OUTSIDE SLEEVE. THE ENTIRE FLEXIBLE DUCT ASSEMBLY SHALL BE LISTED IN ACCORDANCE WITH UL 181 CLASS 1 AIR DUCT MATERIAL. THE MAXIMUM LENGTH OF ANY FLEX DUCT SHALL BE 6'-0".
3. FACTORY MANUFACTURED HVAC DUCTS WILL BE CLASS ONE OR ZERO. ALL DUCTWORK FOR HEATING AND COOLING SYSTEM OR EVAPORATIVE COOLING SYSTEM SHALL BE CONDUCTED THROUGH DUCT SYSTEMS CONSTRUCTED OF METAL AS SET FORTH IN THE SMACNA HVAC DUCT CONSTRUCTION STANDARD – METAL AND FLEXIBLE. FACTORY MADE AIR DUCTS SHALL BE APPROVED FOR USE INTENDED OR SHALL COMPLY WITH THE GOVERNING MECHANICAL CODE.
4. LOW PRESSURE DUCTWORK SHALL BE GALVANIZED STEEL OF GAUGES CONFORMING TO LATEST EDITION OF SMACNA STANDARDS BASED ON 1" W.G. PRESSURE UNLESS SPECIFICALLY NOTED OTHERWISE ON THE DRAWINGS. THE GALVANIZED DUCT COATING IS TO BE G-90.
5. INSULATION APPLIED TO THE EXTERIOR OF THE DUCTS LOCATED INSIDE THE BUILDING SHALL HAVE A FLAME SPREAD OF NOT MORE THAN 25 AND SMOKE-DENSITY NOT EXCEEDING 50 WHEN TESTED AS A COMPOSITE INSTALLATION.
6. ALL INSULATION AND LINING MATERIALS INSTALLED WITHIN DUCTS ARE TO HAVE MOLD, HUMIDITY AND EROSION SURFACE. MATERIALS SHALL HAVE A MOLD, HUMIDITY AND EROSION RESISTANT FACE THAT MEETS THE REQUIREMENTS OF UL 181.
7. PROVIDE R-8 DUCT INSULATION, 1.5" THICK FIBERGLASS WITH VAPOR BARRIER, AND DUCT SEALING WITH FIELD VERIFICATION IS REQUIRED FOR DUCTS IN UNCONDITIONED SPACES IN NEW BUILDINGS. DUCT SEALING IS ALSO REQUIRED IN EXISTING BUILDINGS WHEN THE AIR CONDITIONER IS REPLACED.
8. PROVIDE ACOUSTICAL BOOTS ON TRANSFER OPENINGS PASSING THROUGH ACOUSTIC PARTITIONS.
9. DIFFUSERS, GRILLES, AND REGISTER INSTALLATION SHALL BE COORDINATED WITH OTHER TRADES.
10. APPROXIMATE DIFFUSER THROAT SIZE IS INDICATED ON THE PLANS. FACE SIZE SHALL BE IN ACCORDANCE WITH THE FRAME REQUIREMENTS. ALL DIFFUSERS LAY-IN CEILINGS SHALL BE EQUAL TO THE GRID SPACING (TYPICALLY 24" X 24"). DIFFUSERS IN HARD CEILINGS SHALL BE THROAT SIZE PLUS 2" (TYPICAL).
11. PROVIDE A BALANCING DAMPER AT EVERY SUPPLY AND RETURN BRANCH CONNECTION TO EACH INDIVIDUAL DIFFUSER OR GRILLE IN ENVIRONMENTAL SUPPLY, RETURN, AND EXHAUST DUCTS. THE DAMPER SHALL BE LOCATED AT THE TAP FROM THE MAIN TRUNK DUCT. FOR SIMPLICITY, THESE DAMPERS ARE NOT SHOWN ON THE PLANS. OPPOSED BLADE DAMPERS AT THE DIFFUSER THROAT SHALL NOT BE RELIED UPON AS THE SOLE MEANS OF BALANCING AND SHALL NOT BE ACCEPTED IN LIEU OF A BRANCH DAMPER. INSTALL DAMPER, OR PROVIDE REMOTE ACTUATORS IN AN ACCESSIBLE LOCATION. PROVIDE ACCESS DOORS IN HARD CEILINGS.
12. ALL DIFFUSERS ARE FOUR-WAY THROW, UNLESS OTHERWISE NOTED.
13. RETURN GRILLES TO MATCH SUPPLY DIFFUSERS, UNLESS OTHERWISE NOTED.
14. FLEX DUCTS SHALL BE ATTACHED TO ALL REGISTERS, GRILLES, COLLARS, AND FITTINGS ACCORDING TO ITS LISTING. PROVIDE A MINIMUM OF TWO WRAPS OF UL 181 TAPE AND A PANDUIT STRAP ON THE INSIDE LINER AND A MINIMUM OF TWO WRAPS OF UL 181 TAPE OR A PANDUIT STRAP, OR BOTH ON THE OUTSIDE COVER.
15. SIZE OF BRANCH DUCT CONNECTION TO DIFFUSER, FLEX, AND TAP, IS EQUAL TO DIFFUSER NECK SIZE UNLESS OTHERWISE NOTED.

CONTROLS

1. PROVIDE HVAC LOW VOLTAGE CONTROLS TRANSFORMERS, PROPERLY SIZED FOR THE CONNECTED LOAD, FOR ANY MECHANICAL EQUIPMENT THAT REQUIRES LOW VOLTAGE CONTROL POWER. COORDINATE CONTROL POWER WITH ELECTRICAL.
2. COORDINATE THERMOSTAT LOCATIONS WITH OWNER AND INTERIOR SPACE DESIGNER PRIOR TO INSTALLATION. AVOID CONFLICTS WITH THE FURNITURE, ARTWORK, INTERIOR, PARTITIONS, ETC. DO NOT LOCATE THERMOSTATS NEAR ANY HEAT GENERATING EQUIPMENT SUCH AS COPIERS OR LASER PRINTERS.

DEMAND CONTROL VENTILATION:

1. DEMAND CONTROLLED VENTILATION DEVICES (CO2 SENSORS) SHALL BE INSTALLED IN ACCORDANCE WITH TITLE 24, PART 6.
2. PROVIDE CO2 SENSORS TO CONTROL VENTILATION IN ROOMS WITH VARYING OCCUPANCY INCLUDING CONFERENCE ROOMS, DINING ROOMS, LOUNGES, GYMS, OR WHERE INDICATED IN ALL ROOMS WITH A DESIGN OCCUPANCY OF 40SF/PERSON OR LESS.
3. CO2 SENSORS SHALL BE LOCATED BETWEEN 1 AND 6 FEET ABOVE THE FLOOR.
4. SET VENTILATION CONTROLS TO MAINTAIN CO2 LEVELS AT 600PPM OR LESS.
5. FACTORY CERTIFIED SENSORS SHALL HAVE AN ACCURACY OF NO LESS THAN 75PPM OVER A 5-YEAR PERIOD WITHOUT CALIBRATION IN THE FIELD.

SEISMIC

1. ALL NEW REGISTERS AND GRILLES INSTALLED IN T-BAR CEILINGS SHALL BE ATTACHED AT EACH CORNER TO THE MAIN RUNNERS WITH APPROVED CLIPS OR SHEET METAL SCREWS.
2. PROVIDE SEISMIC BRACING PER ASCE 7-10 CHAPTER 13. ALL APPLIANCES DESIGNED TO BE IN A FIXED POSITION SHALL BE SECURELY FASTENED IN PLACE IN ACCORDANCE WITH THE MANUFACTURER'S INSTALLATION INSTRUCTIONS. SUPPORTS FOR APPLIANCES SHALL BE DESIGNED AND CONSTRUCTED TO RESIST HORIZONTAL AND VERTICAL LOADS WITHIN THE STRESS LIMITATIONS OF THE APPLICABLE BUILDING CODE.

GREASE DUCT

1. GREASE DUCT SHALL BE SLOPED NO LESS THAN ONE-FOURTH UNIT VERTICAL / 12 UNITS HORIZONTAL TOWARD AN APPROVED GREASE INTERCEPTOR.
2. ACCESS FOR CLEANING AND INSPECTION
   - A. ON HORIZONTAL DUCTS NOT LESS THAN ONE 20 INCH BY 20 INCH OPENING SHALL BE PROVIDED FOR PERSONNEL ENTRY. WHERE AN OPENING FOR PERSONNEL ENTRY IS NO T POSSIBLE. PROVIDE OPENINGS LARGE ENOUGH TO PERMIT THOROUGH CLEANING AT 12 FEET INTERVALS ALONG THE DUCT.
   - B. ON VERTICAL DUCTS, ACCESS SHALL BE PROVIDED AT THE TOP OF VERTICAL RISE TO ACCOMMODATE PERSONNEL ACCESS. WHERE PERSONNEL ENTRY IS NOT POSSIBLE, AN ACCESS FOR CLEANING SHALL BE PROVIDED ON EACH FLOOR.
   - C. ACCESS PANELS SHALL BE OF THE SAME MATERIAL AND THICKNESS AS THE DUCT. ACCES PANELS SHALL HAVE A GASKET OR SEALANT THAT IS RATED FOR 1500°F AND SHALL BE GREASETIGHT.

ABBREVIATIONS

(E)	EXISTING
(N)	NEW
(R)	REMOVE
(RE)	RELOCATED
A/C	AIR CONDITIONER
AFCI	ARC FAULT CIRCUIT INTERRUPTER
AHJ	AUTHORITY HAVING JURISDICTION
AIC	AMPS INRUSH CURRENT
ARCH	ARCHITECTURAL
ATS	AUTOMATIC TRANSFER SWITCH
CKT	CIRCUIT
CO	CONDUIT ONLY
CTR	CENTER
CTRTOP	COUNTERTOP
DB	DISTRIBUTION BOARD
DISC	DISCONNECT
DN	DOWN
DWG	DRAWING
E.	EAST
EM	EMERGENCY
FC	FLEXIBLE CONNECTION
FD	FIRE DAMPER
FLA	FULL LOAD AMPS
FSD	FIRE SMOKE DAMPER
GALV	GALVANIZED
GFCI	GROUND FAULT CIRCUIT INTERRUPTER
GRD	GROUND
LCL	LONG CONTINUOUS LOAD
LML	LARGEST MOTOR LOAD
LTG	LIGHTING
LV	LOW-VOLTAGE
MECH	MECHANICAL
MTB	MAIN TELEPHONE BOARD
MWBC	MULTI-WIRE BRANCH CIRCUIT
N.	NORTH
NE	NORTHEAST
NIC	NOT IN CONTRACT
NTS	NOT TO SCALE
NW	NORTHWEST
PB	PULLBOX
PNL	PANEL
REC	RECEPTACLE
S.	SOUTH
SC	SEPARATE CIRCUIT
SD	SMOKE DETECTOR
SE	SOUTHEAST
SW	SWITCH
SW	SOUTHWEST
T/C	TIME CLOCK
TYP	TYPICAL
U/G	UNDERGROUND
UNO	UNLESS NOTED OTHERWISE
UPS	UNITERRUPTIBLE POWER SOURCE
V	VOLTS
VIF	VERIFY IN FIELD
W.	WEST
WP	WATERPROOF
XFMR	TRANSFORMER

MECHANICAL LEGEND

- NEW DUCT WORK AND / OR EQUIPMENT
- EXISTING DUCT WORK / OR EQUIPMENT
- HIDDEN DUCT WORK AND/ OR EQUIPMENT
- DUCT TO BE DEMOLISHED
- RETURN DUCT, UP
- SUPPLY DUCT, UP
- EXHAUST DUCT, UP
- RETURN DUCT, DOWN
- SUPPLY DUCT, DOWN
- EXHAUST DUCT, DOWN
- ELBOWS WITH TURNING VANES
- TEE DUCT WITH TURNING VANES
- DUCT WITH ACOUSTICAL LINING
- INTERNALLY LINED DUCT
- D — DUCT DROP (IN DIRECTIN OF AIRFLOW)
- R — DUCT DROP (IN DIRECTIN OF AIRFLOW)
- TRANSITION SQUARE TO ROUND
- TRANSITION SQUARE TO SQUARE / ROUND TO ROUND
- FLEXIBLE DUCT
- FLEXIBLE CONNECTION
- RADIUS ELBOW
- SUPPLY DIFFUSER, RECESSED MOUNTED
- RETURN, RECESSED MOUNTED
- EXHAUST AIR REGISTER GRILLE
- D — VERTICAL DUCT DROP
- R — VERTICAL DUCT RISE
- F — FIRE DUMPER
- SF — COMBINATION OF SMOKE & FIRE DAMPER
- MANUAL VOLUME DAMPER
- L — DOOR LOUVER
- UC — UNDERCUT (DOOR)
- CD — CONDENSATE DRAIN
- T — THERMOSTAT
- SD — SMOKE DETECTOR
- ø — DIAMETER / ROUND
- SQUARE FEET
- M — PROVIDED AND INSTALLED BY DIVISION 15
- C — PROVIDED AND INSTALLED BY DIVISION 15 CONTROL
- E — PROVIDED AND INSTALLED BY DIVISION 16
- CO — CARBON MONOXIDE SENSOR
- TS — TEMPERATURE SENSOR
- POINT OF CONNECTION
- 18 — DIFFUSER NECK SIZE
- 800 — CFM
- MCD — MANUAL CONTROL DAMPER
- ACD — AUTOMATIC CONTROL DAMPER
- AD — DUCT ACCESS DOOR. SIZE AS NOTED.
- CPM — MAIN VRF CONTROL PANEL, POWERED FROM INDOOR UNIT. PROVIDE COMMUNICATION CABLES TO FAN COIL PER MANUFACTURER'S REQUIREMENTS. VERIFY FINAL LOCATION OF CONTROL PANEL WITH OWNER/ARCHITECT
- CPZ — ZONE CONTROL PANEL, POWERED FROM INDOOR UNIT. PROVIDE COMMUNICATION CABLES TO FAN COIL PER MANUFACTURER'S REQUIREMENTS. VERIFY FINAL LOCATION OF CONTROL PANEL WITH OWNER/ARCHITECT
- 1 / M-1 — DETAIL TOP - I.D. NUMBER REF. BOTTOM - SHT. NUMBER
- 1 / M-1 — SECTION TOP - I.D. NUMBER REF. BOTTOM - SHT. NUMBER

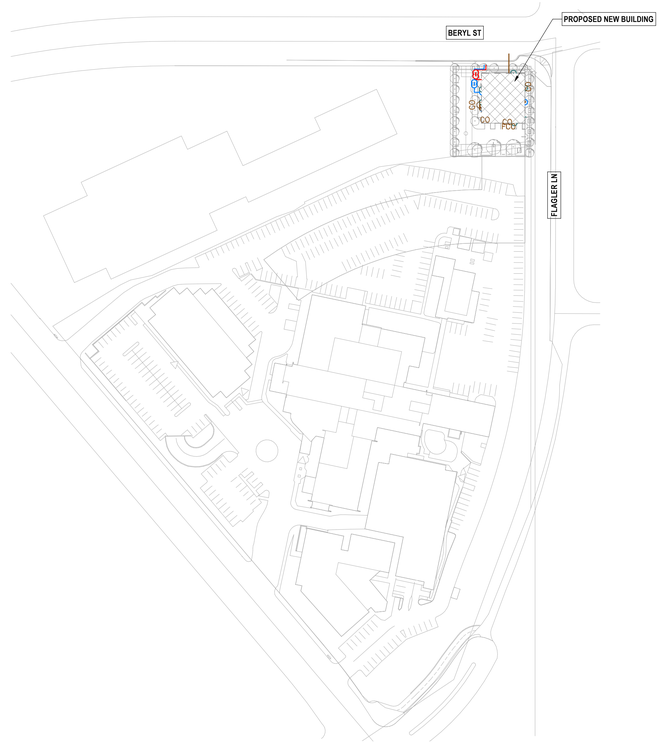

1 **SITE PLAN**
1" = 100'-0"

SCOPE OF WORK

HVAC FOR NEW MULTI-PURPOSE CENTER. PACKAGED ROOF TOP UNIT. VRF HEAT PUMPS WITH HEAT RECOVERY, VRF FAN COILS, ROOF EXHAUST, ROOF MAKEUP/ FRESH AIR FANS.

SHEET INDEX - MECHANICAL

SHEET NO.	SHEET NAME
M-0.1	MECHANICAL LEAD SHEET
M-0.2	HVAC ZONING SCHEME
M-0.3	SCHEDULES
M-1.0	1ST FLOOR HVAC PLAN
M-1.1	2ND FLOOR HVAC PLAN
M-1.2	ROOF HVAC PLAN

PAUL MURDOCH ARCHITECTS
6310 SAN VICENTE BLVD. SUITE 400
LOS ANGELES, CA 90048
T. 310 358-0993

THE DRAWINGS AND SPECIFICATIONS AND IDEAS, DESIGNS, AND ARRANGEMENTS REPRESENTED THEREBY ARE AND SHALL REMAIN THE PROPERTY OF THE ARCHITECT, AND NO PART THEREOF SHALL BE COPIED, DISCLOSED TO OTHERS, OR USED IN CONNECTION WITH ANY WORK OR PROJECT OTHER THAN THE SPECIFIC PROJECT FOR WHICH THEY HAVE BEEN PREPARED AND DEVELOPED WITHOUT THE WRITTEN CONSENT OF THE ARCHITECT. VISUAL CONTACT WITH THESE DRAWINGS OR SPECIFICATIONS SHALL CONSTITUTE CONCLUSIVE EVIDENCE OF ACCEPTANCE OF THESE RESTRICTIONS. WRITTEN DIMENSIONS ON THESE DRAWINGS SHALL HAVE PRECEDENCE OVER SCALED DIMENSIONS. CONTRACTORS SHALL VERIFY AND BE RESPONSIBLE FOR ALL DIMENSIONS AND CONDITIONS ON THE JOB AND THIS OFFICE MUST BE NOTIFIED OF ANY VARIATIONS FROM THE DIMENSIONS AND CONDITIONS SHOWN BY THESE DRAWINGS. SHOP DETAILS MUST BE SUBMITTED TO THIS OFFICE FOR REVIEW BEFORE PROCEEDING WITH FABRICATION.

LEWISROSS ASSOCIATES, INC
MEP ENGINEERS
25061 AVENUE STANFORD,
VALENCIA, CA 91355
PHONE: (818) 886-2190 FAX: (818) 886-2131

PROJECT NAME: 23-115
PROJECT NAME: BCHD allcove
PROJECT ADDRESS: -

REV	DESCRIPTION	DATE

allcove
BEACH CITIES HEALTH DISTRICT

100% PRELIMINARY DESIGN SUBMITTAL

PMA PROJECT NO. 23007
DRAWING TITLE:
MECHANICAL LEAD SHEET

SCALE: AS SHOWN
DATE: 02/28/2024
DRAWN BY: UK
CHECKED BY: TP

SHEET NO. **M-0.1**

COPYRIGHT LEWIS ROSS ASSOCIATES

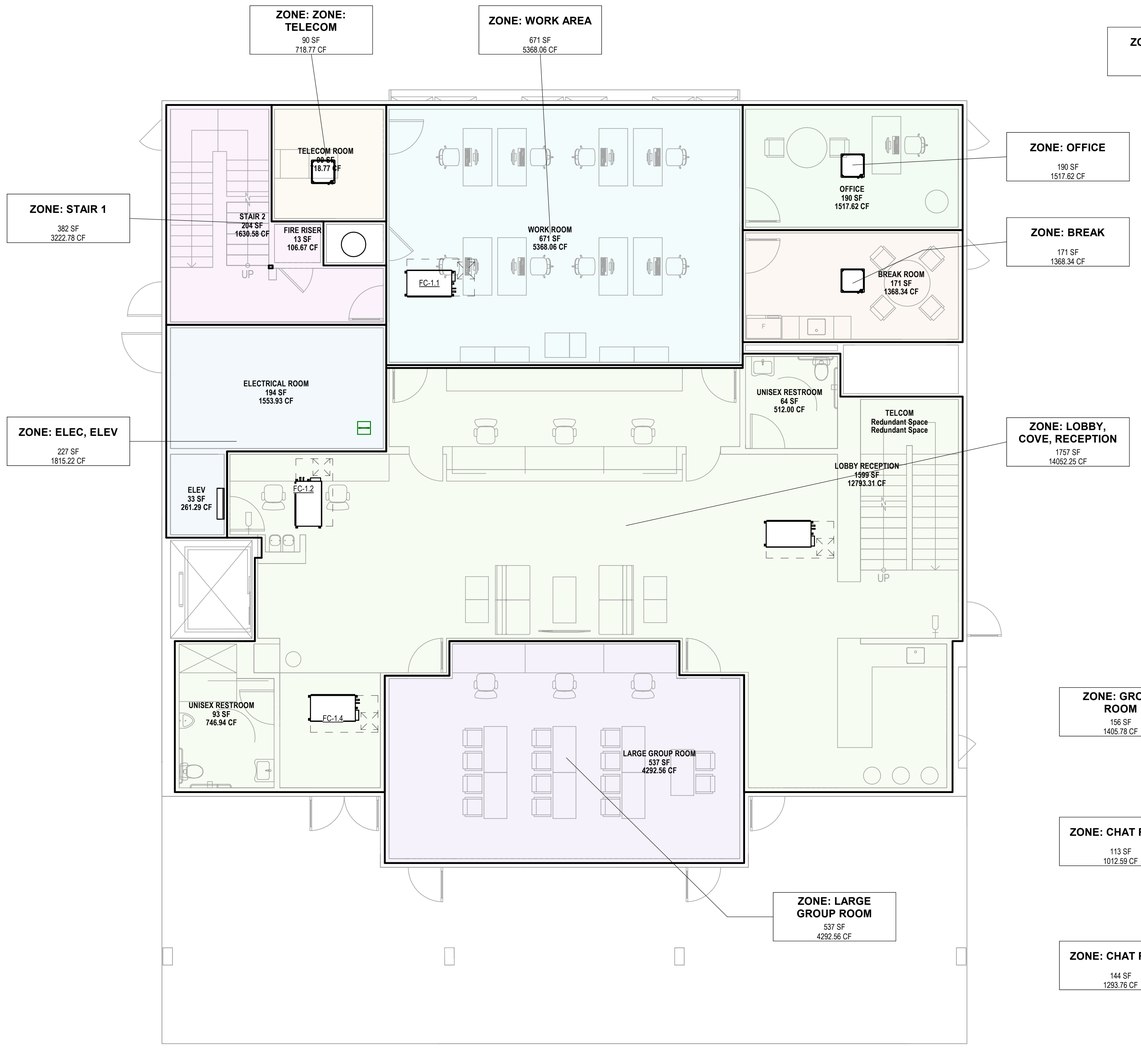

1 HVAC ZONING SCHEME - 1ST FLOOR
3/16" = 1'-0"

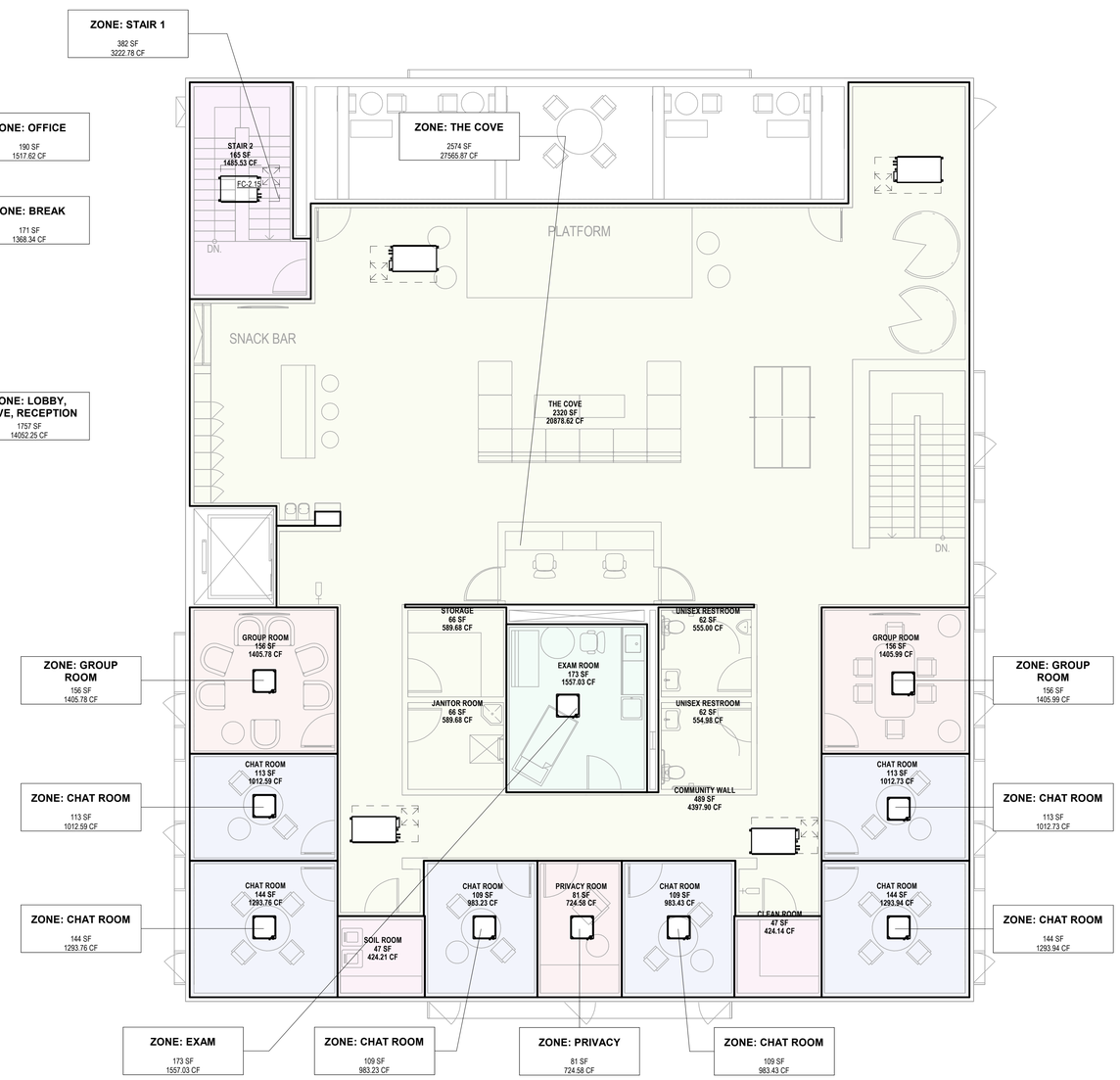

2 HVAC ZONING SCHEME - 2ND FLOOR
3/16" = 1'-0"

- BREAK
- CHAT ROOM
- COVE
- ELEC, ELEV
- EXAM
- GROUP ROOM
- LARGE GROUP ROOM
- LOBBY, COVE, RECEPTION
- OFFICE
- PRIVACY
- STAIR 1
- THE COVE
- WORK AREA
- ZONE: TELECOM

WORKING - HVAC Zone Schedule

Name	Level	Gross Area	Gross Volume	Comments
Default		607 SF	4857.13 CF	
OFFICE	1ST FLOOR	190 SF	1517.62 CF	
BREAK	1ST FLOOR	171 SF	1368.34 CF	
LOBBY, COVE, RECEPTION	1ST FLOOR	1757 SF	14052.25 CF	DEMAND CONTROL VENTILATION. GOOD CANDIDATE FOR PART-TIME PASSIVE VENTILATION.
EXAM	2ND FLOOR	173 SF	1557.03 CF	
WORK AREA	1ST FLOOR	671 SF	5368.06 CF	
ELEC, ELEV	1ST FLOOR	227 SF	1815.22 CF	AIR CONDITIONING TBD BASED ON EQUIPMENT REQUIREMENTS AND ELEVATOR SPECS
LARGE GROUP ROOM	1ST FLOOR	537 SF	4292.56 CF	DEMAND CONTROL VENTILATION
STAIR 1	2ND FLOOR	382 SF	3222.78 CF	AIR CONDITIONING TBD PENDING CONFIRMATION FROM OWNER. COULD PROVIDE VENTILATION ONLY FOR ENERGY SAVINGS.
THE COVE	2ND FLOOR	2574 SF	27565.87 CF	
GROUP ROOM	2ND FLOOR	156 SF	1405.78 CF	DEMAND CONTROL VENTILATION
CHAT ROOM	2ND FLOOR	113 SF	1012.59 CF	
CHAT ROOM	2ND FLOOR	144 SF	1293.76 CF	
CHAT ROOM	2ND FLOOR	109 SF	983.23 CF	
COVE	2ND FLOOR	94 SF	848.34 CF	
GROUP ROOM	2ND FLOOR	156 SF	1405.99 CF	DEMAND CONTROL VENTILATION
CHAT ROOM	2ND FLOOR	113 SF	1012.73 CF	
CHAT ROOM	2ND FLOOR	144 SF	1293.94 CF	
PRIVACY	2ND FLOOR	81 SF	724.58 CF	
CHAT ROOM	2ND FLOOR	109 SF	983.43 CF	
ZONE: TELECOM	1ST FLOOR	90 SF	718.77 CF	

PAUL MURDOCH ARCHITECTS
6310 SAN VICENTE BLVD. SUITE 400
LOS ANGELES, CA 90048
T. 310 358-0993

THE DRAWINGS AND SPECIFICATIONS AND IDEAS, DESIGNS, AND ARRANGEMENTS REPRESENTED THEREBY ARE AND SHALL REMAIN THE PROPERTY OF THE ARCHITECT, AND NO PART THEREOF SHALL BE COPIED, DISCLOSED TO OTHERS, OR USED IN CONNECTION WITH ANY WORK OR PROJECT OTHER THAN THE SPECIFIC PROJECT FOR WHICH THEY HAVE BEEN PREPARED AND DEVELOPED WITHOUT THE WRITTEN CONSENT OF THE ARCHITECT. VISUAL CONTACT WITH THESE DRAWINGS OR SPECIFICATIONS SHALL CONSTITUTE CONCLUSIVE EVIDENCE OF ACCEPTANCE OF THESE RESTRICTIONS. WRITTEN DIMENSIONS ON THESE DRAWINGS SHALL HAVE PRECEDENCE OVER SCALED DIMENSIONS. CONTRACTORS SHALL VERIFY AND BE RESPONSIBLE FOR ALL DIMENSIONS AND CONDITIONS ON THE JOB AND THIS OFFICE MUST BE NOTIFIED OF ANY VARIATIONS FROM THE DIMENSIONS AND CONDITIONS SHOWN BY THESE DRAWINGS. SHOP DETAILS MUST BE SUBMITTED TO THIS OFFICE FOR REVIEW BEFORE PROCEEDING WITH FABRICATION.

LEWISROSS ASSOCIATES, INC
MEP ENGINEERS
25061 AVENUE STANFORD,
VALENCIA, CA 91355
PHONE: (818) 886-2190 FAX: (818) 886-2131

PROJECT NAME: 23-115
PROJECT NAME: BCHD allcove
PROJECT ADDRESS: -

REV	DESCRIPTION	DATE

allcove
BEACH CITIES HEALTH DISTRICT

100% PRELIMINARY DESIGN SUBMITTAL

PMA PROJECT NO. 23007
DRAWING TITLE:
HVAC ZONING SCHEME

SCALE: AS SHOWN
DATE: 02/28/2024
DRAWN BY: UK
CHECKED BY: TP
SHEET NO. M-0.2

COPYRIGHT LEWIS ROSS ASSOCIATES

OUTDOOR UNIT EQUIPMENT SCHEDULE

TAG	MANUFA.	MODEL	CAPACITY IN TR	SERVES	TOTAL COOLING CAP.Btuh	TOTAL HEATING CAP.Btuh	OUTDOOR TEMP.(IN F.)						WEIGHT (LBS)	REMARKS
							COOLING DB	COOLING WB	HEATING DB	MCA	MOCP	VOLTAGE		
HP-1	LG	ARUM121BTE5	10.0	FIRST FLOOR	119,700	135,000	83	68	41	30.9	40	208/230-3-60	550	1, 2, 3, 4, 5, 6
HP-2	LG	ARUM072BTE5	6.0	SECOND FLOOR	72,000	81,000	83	68	41	22.6	35	208/230-1-60	450	1, 2, 3, 4, 5, 6
HP-3	LG	ARUM09BTE5	8.0	SECOND FLOOR	96,000	108,000	83	68	41	28.5	40	208/230-3-60	550	1, 2, 3, 4, 5, 6

NOTES

1- FOR UNIT PER MANUFACTURER'S RECOMMENDATION AND INSTALLATION MANUAL.

2- PROVIDE REFRIGERANT PIPING LENGTH AS REQUIRED BY MANUFACTURER FOR A COMPLETE AND OPERATINAL SYSTEM

3- EACH INDIVIDUAL MODULE REQUIRES A SEPARATE ELECTRICAL CONNECTION

4- PROVIDE UNIT WITH TWINNING KIT.

5- PROVIDE UNIT WITH BV SERIES BALL VALVES(BRAZED) FOR BRANCH CONTROLLERS BY MANUFACTURER.

6- PROVIDE UNIT WITH BRANCH CONTROLLER.

VRF FAN COIL UNIT SCHEDULE

TAG	MATCHING UNIT	MODEL	DESCRIPTION	SERVES	CFM	S.P	TOTAL COOLING CAP.Btuh	TOTAL HEATING CAP.Btuh	MIN. OA CFM	ELECTRICAL				WEIGHT (LBS)	REMARKS
										MAX.WATTS	MCA	MOCP	VOLTAGE		
FC-1.1	HP-01/BC-1 &2	ARNU183M1A4	CEILING CONCEALED MID STATIC UNIT	FIRST FLOOR	641	0.4	19,100	21,500	96.15	190	1.6	15	208-1-60	75	1, 2, 3, 4, 6, 7, 8
FC-1.2		ARNU363M2A4	CEILING CONCEALED MID STATIC UNIT		1021	0.4	36,200	40,600	153.15	430	2.3	15	208-1-60	95	1, 2, 3, 4, 6, 7, 8
FC-1.3		ARNU363M2A4	CEILING CONCEALED MID STATIC UNIT		1021	0.4	36,200	40,600	153.15	430	2.3	15	208-1-60	95	1, 2, 3, 4, 6, 7, 8
FC-1.4		ARNU183M1A4	CEILING CONCEALED MID STATIC UNIT		641	0.4	19,100	21,500	96.15	190	1.6	15	208-1-60	75	1, 2, 3, 4, 6, 7, 8
FC-1.5		ARNU073D4	CEILING CASSETTE UNIT		247	-	7,500	8,500	-	15	0.4	15	208-1-60	30	1, 4, 5, 6, 7
FC-1.6		ARNU073D4	CEILING CASSETTE UNIT		247	-	7,500	8,500	-	15	0.4	15	208-1-60	30	1, 4, 5, 6, 7
FC-1.7		ARNU073D4	CEILING CASSETTE UNIT		247	-	7,500	8,500	-	15	0.4	15	208-1-60	30	1, 4, 5, 6, 7
FC-1.8		ARNU073SJS4	WALL MOUNTED FAN COIL UNIT		247	-	7,500	8,500	-	15	0.4	15	208-1-60	20	1, 5, 6, 7
				TOTAL CONNECTED LOAD ON ODU			**140,600**	**158,200**							
FC-2.1	HP-02/BC-2	ARNU053D4	CEILING CASSETTE UNIT	SECOND FLOOR	247	-	7,500	8,500	-	15	0.4	15	208-1-60	30	1, 4, 5, 6, 7
FC-2.2		ARNU073D4	CEILING CASSETTE UNIT		247	-	7,500	8,500	-	15	0.4	15	208-1-60	30	1, 4, 5, 6, 7
FC-2.3		ARNU073D4	CEILING CASSETTE UNIT		247	-	7,500	8,500	-	15	0.4	15	208-1-60	30	1, 4, 5, 6, 7
FC-2.4		ARNU053D4	CEILING CASSETTE UNIT		247	-	5,500	6,100	-	15	0.4	15	208-1-60	30	1, 4, 5, 6, 7
FC-2.5		ARNU053D4	CEILING CASSETTE UNIT		247	-	5,500	6,100	-	15	0.4	15	208-1-60	30	1, 4, 5, 6, 7
FC-2.6		ARNU053D4	CEILING CASSETTE UNIT		247	-	5,500	6,100	-	15	0.4	15	208-1-60	30	1, 4, 5, 6, 7
FC-2.7		ARNU073D4	CEILING CASSETTE UNIT		247	-	7,500	8,500	-	15	0.4	15	208-1-60	30	1, 4, 5, 6, 7
FC-2.8		ARNU073D4	CEILING CASSETTE UNIT		247	-	7,500	8,500	-	15	0.4	15	208-1-60	30	1, 4, 5, 6, 7
FC-2.9		ARNU073D4	CEILING CASSETTE UNIT		247	-	7,500	8,500	-	15	0.4	15	208-1-60	30	1, 4, 5, 6, 7
FC-2.10		ARNU073D4	CEILING CASSETTE UNIT		247	-	7,500	8,500	-	15	0.4	15	208-1-60	30	1, 4, 5, 6, 7
				TOTAL CONNECTED LOAD ON ODU			**69,000**	**77,800**							
FC-2.11	HP-03/BC-3	ARNU363M2A4	CEILING CONCEALED MID STATIC UNIT	SECOND FLOOR	1021	0.4	36,200	40,600	153.15	430	2.3	15	208-1-60	95	1, 2, 3, 4, 6, 7, 8
FC-2.12		ARNU363M2A4	CEILING CONCEALED MID STATIC UNIT		1021	0.4	36,200	40,600	153.15	430	2.3	15	208-1-60	95	1, 2, 3, 4, 6, 7, 8
FC-2.13		ARNU183M1A4	CEILING CONCEALED MID STATIC UNIT		641	0.4	19,100	21,500	96.15	190	1.6	15	208-1-60	75	1, 2, 3, 4, 6, 7, 8
FC-2.14		ARNU183M1A4	CEILING CONCEALED MID STATIC UNIT		641	0.4	19,100	21,500	96.15	190	1.6	15	208-1-60	75	1, 2, 3, 4, 6, 7, 8
FC-2.15		ARNU183M1A4	CEILING CONCEALED MID STATIC UNIT		641	0.4	19,100	21,500	96.15	190	1.6	15	208-1-60	75	1, 2, 3, 4, 6, 7, 8
				TOTAL CONNECTED LOAD ON ODU			**110,600**	**124,200**							

NOTES

1- INSTALL UNIT PER MANUFACTURER'S RECOMMENDATION AND INSTALLATION MANUAL.

2- PROVIDE UNIT WITH 1"THICK ACOUSTICALLY LINED SUPPLY AND RETURN AIR PLENUMS.

3- PROVIDE FILTER BOX & MERV-13 FILTER

4- PROVIDE UNIT WITH A PROGRAMMABLE THERMOSTAT.

5- PROVIDE UNIT WITH CONDENSATE PUMP IF REQUIRED PER SITE

6- PROVIDE UNIT WITH BACnet CONTROLLER.

7- PROVIDE UNIT WITH BRANCH PIPING KIT.

8- PROVIDE VIBRATION ISOLATION SPRING HANGERS W/A MINIMUM OF 1" STATIC DEFLECTION, EQUAL TO VIBRAX.

FAN SCHEDULE

TAG	TYPE	SPACE SERVED	MFG'R	MODEL	DRIVE	CFM	ESP	RPM	ELECTRICAL				SONES	WEIGHT (LBS)	REMARKS
									VOLTS/PHASE/FREQ.	HP	FLA	WATTS			
EF-1	ROOF MOUNTED	FIRST FLOOR	GREENHECK	CUE-100	DIRECT	400	0.5	1,142	115/1/60	0.2	-	-	-	65	1, 2, 4, 6
EF-2	ROOF MOUNTED	SECOND FLOOR	GREENHECK	CUE-100	DIRECT	600	0.5	1,142	115/1/60	0.2	-	-	-	65	1, 2, 4, 6
EF-3	IN LINE CEILING	FIRST FLOOR	GREENHECK	SQ-95	DIRECT	200	0.2	1,142	115/1/60	0.1	-	-	-	50	1, 2, 5
SF-1	ROOF MOUNTED	FIRST FLOOR	GREENHECK	USF-15-B7	DIRECT	500	0.5	1,142	115/1/60	0.2	-	-	-	180	2, 3, 6
SF-2	ROOF MOUNTED	SECOND FLOOR	GREENHECK	USF-15-B7	DIRECT	500	0.5	1,142	115/1/60	0.2	-	-	-	180	2, 3, 6

NOTES:

1. PROVIDE WITH BACKDRAFT DAMPER IN EXHAUST DUCT

2. MOUNT IN CEILING/ ROOF PER MANUFACTURER'S REQUIREMENTS

3. TO BE OPERATED ON VIA DEMAND FROM FAN COILS

4. TO BE OPERATED VIA TIME CLOCK

5. TO BE OPERATED VIA LINE VOLTAGE THERMOSTAT & OCCUPANCY SENSOR

6. WITH SPEED CONTROL

PAUL MURDOCH ARCHITECTS
6310 SAN VICENTE BLVD. SUITE 400
LOS ANGELES, CA 90048
T. 310 358-0993

THE DRAWINGS AND SPECIFICATIONS AND IDEAS, DESIGNS, AND ARRANGEMENTS REPRESENTED THEREBY ARE AND SHALL REMAIN THE PROPERTY OF THE ARCHITECT, AND NO PART THEREOF SHALL BE COPIED, DISCLOSED TO OTHERS, OR USED IN CONNECTION WITH ANY WORK OR PROJECT OTHER THAN THE SPECIFIC PROJECT FOR WHICH THEY HAVE BEEN PREPARED AND DEVELOPED WITHOUT THE WRITTEN CONSENT OF THE ARCHITECT. VISUAL CONTACT WITH THESE DRAWINGS OR SPECIFICATIONS SHALL CONSTITUTE CONCLUSIVE EVIDENCE OF ACCEPTANCE OF THESE RESTRICTIONS. WRITTEN DIMENSIONS ON THESE DRAWINGS SHALL HAVE PRECEDENCE OVER SCALED DIMENSIONS. CONTRACTORS SHALL VERIFY AND BE RESPONSIBLE FOR ALL DIMENSIONS AND CONDITIONS ON THE JOB AND THIS OFFICE MUST BE NOTIFIED OF ANY VARIATIONS FROM THE DIMENSIONS AND CONDITIONS SHOWN BY THESE DRAWINGS. SHOP DETAILS MUST BE SUBMITTED TO THIS OFFICE FOR REVIEW BEFORE PROCEEDING WITH FABRICATION.

LEWISROSS ASSOCIATES, INC
MEP ENGINEERS
25061 AVENUE STANFORD,
VALENCIA, CA 91355
PHONE: (818) 886-2190 FAX: (818) 886-2131

PROJECT NAME: 23-115
PROJECT NAME: BCHD allcove
PROJECT ADDRESS: -

REV	DESCRIPTION	DATE

allcove
BEACH CITIES HEALTH DISTRICT

100% PRELIMINARY DESIGN SUBMITTAL

PMA PROJECT NO. 23007
DRAWING TITLE:
SCHEDULES

SCALE: AS SHOWN
DATE: 02/28/2024
DRAWN BY: UK
CHECKED BY: TP

SHEET NO. M-0.3

COPYRIGHT LEWIS ROSS ASSOCIATES

KEYNOTES MECHANICAL

#	NOTE
1	VRF FAN COIL IN CEILING SPACE, PROVIDE MERV 13 FILTER BOX AND ACCESS IN CEILING.
2	WALL MOUNTED VRF FAN COIL UNIT, PROVIDE CONDENSATE PUMP IF REQUIRED PER SITE CONDITION.
3	OUTSIDE AIR INTAKE WALL CAP

GENERAL NOTE:

COORDINATE LOCATIONS FOR ALL MECHANICAL EQUIPMENT WITH CEILING MOUNTED DEVICES INCLUDING BUT NOT LIMITED TO LIGHT FIXTURE LAYOUTS, SPEAKERS AND AV PROJECTORS. FAN COIL UNIT LOCATIONS SHOWS DIAGRAMMATIC AND REQUIRES FURTHER COORDINATION WITH STRUCTURE AND DEVICES NOTED ABOVE.

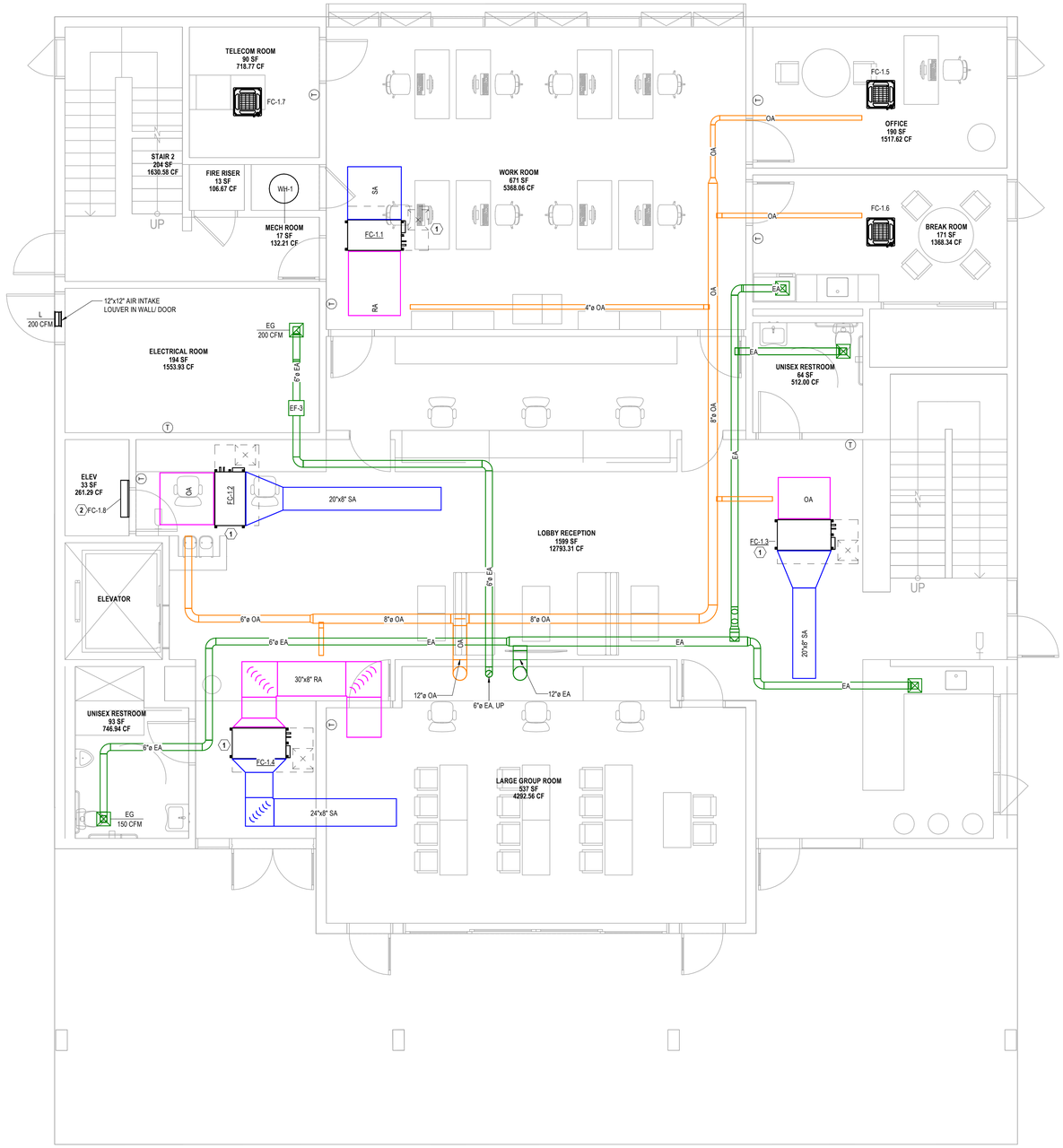

1 **1ST FLOOR HVAC PLAN**
1/4" = 1'-0"

PAUL MURDOCH ARCHITECTS
6310 SAN VICENTE BLVD. SUITE 400
LOS ANGELES, CA 90048
T. 310 358-0993

THE DRAWINGS AND SPECIFICATIONS AND IDEAS, DESIGNS, AND ARRANGEMENTS REPRESENTED THEREBY ARE AND SHALL REMAIN THE PROPERTY OF THE ARCHITECT, AND NO PART THEREOF SHALL BE COPIED, DISCLOSED TO OTHERS, OR USED IN CONNECTION WITH ANY WORK OR PROJECT OTHER THAN THE SPECIFIC PROJECT FOR WHICH THEY HAVE BEEN PREPARED AND DEVELOPED WITHOUT THE WRITTEN CONSENT OF THE ARCHITECT. VISUAL CONTACT WITH THESE DRAWINGS OR SPECIFICATIONS SHALL CONSTITUTE CONCLUSIVE EVIDENCE OF ACCEPTANCE OF THESE RESTRICTIONS. WRITTEN DIMENSIONS ON THESE DRAWINGS SHALL HAVE PRECEDENCE OVER SCALED DIMENSIONS. CONTRACTORS SHALL VERIFY AND BE RESPONSIBLE FOR ALL DIMENSIONS AND CONDITIONS ON THE JOB AND THIS OFFICE MUST BE NOTIFIED OF ANY VARIATIONS FROM THE DIMENSIONS AND CONDITIONS SHOWN BY THESE DRAWINGS. SHOP DETAILS MUST BE SUBMITTED TO THIS OFFICE FOR REVIEW BEFORE PROCEEDING WITH FABRICATION.

LEWISROSS ASSOCIATES, INC
MEP ENGINEERS
25061 AVENUE STANFORD,
VALENCIA, CA 91355
PHONE: (818) 886-2190 FAX: (818) 886-2131

PROJECT NAME: 23-115
PROJECT NAME: BCHD allcove
PROJECT ADDRESS: -

REV	DESCRIPTION	DATE

allcove
BEACH CITIES HEALTH DISTRICT

100% PRELIMINARY DESIGN SUBMITTAL

PMA PROJECT NO. 23007
DRAWING TITLE:
1ST FLOOR HVAC PLAN

SCALE: AS SHOWN
DATE: 02/28/2024
DRAWN BY: UK
CHECKED BY: TP
SHEET NO. **M-1.0**

COPYRIGHT LEWIS ROSS ASSOCIATES

KEYNOTES MECHANICAL

#	NOTE
1	VRF FAN COIL IN CEILING SPACE, PROVIDE MERV 13 FILTER BOX AND ACCESS IN CEILING.
2	WALL MOUNTED VRF FAN COIL UNIT, PROVIDE CONDENSATE PUMP IF REQUIRED PER SITE CONDITION.
3	OUTSIDE AIR INTAKE WALL CAP

GENERAL NOTE:

COORDINATE LOCATIONS FOR ALL MECHANICAL EQUIPMENT WITH CEILING MOUNTED DEVICES INCLUDING BUT NOT LIMITED TO LIGHT FIXTURE LAYOUTS, SPEAKERS AND AV PROJECTORS. FAN COIL UNIT LOCATIONS SHOWS DIAGRAMMATIC AND REQUIRES FURTHER COORDINATION WITH STRUCTURE AND DEVICES NOTED ABOVE.

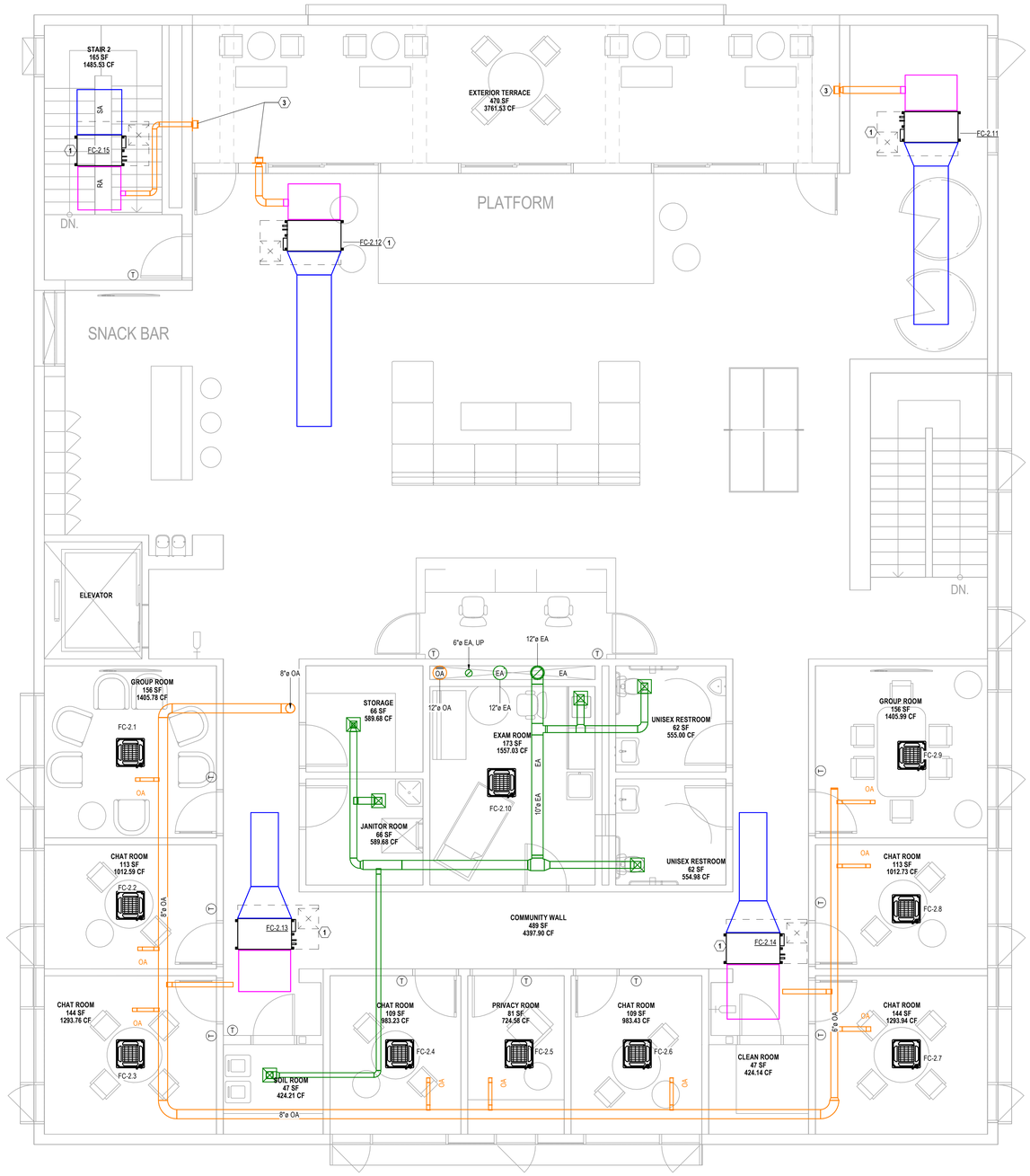

1 **2ND FLOOR HVAC PLAN**
1/4" = 1'-0"

PAUL MURDOCH ARCHITECTS
6310 SAN VICENTE BLVD. SUITE 400
LOS ANGELES, CA 90048
T. 310 358-0993

THE DRAWINGS AND SPECIFICATIONS AND IDEAS, DESIGNS, AND ARRANGEMENTS REPRESENTED THEREBY ARE AND SHALL REMAIN THE PROPERTY OF THE ARCHITECT, AND NO PART THEREOF SHALL BE COPIED, DISCLOSED TO OTHERS, OR USED IN CONNECTION WITH ANY WORK OR PROJECT OTHER THAN THE SPECIFIC PROJECT FOR WHICH THEY HAVE BEEN PREPARED AND DEVELOPED WITHOUT THE WRITTEN CONSENT OF THE ARCHITECT. VISUAL CONTACT WITH THESE DRAWINGS OR SPECIFICATIONS SHALL CONSTITUTE CONCLUSIVE EVIDENCE OF ACCEPTANCE OF THESE RESTRICTIONS. WRITTEN DIMENSIONS ON THESE DRAWINGS SHALL HAVE PRECEDENCE OVER SCALED DIMENSIONS. CONTRACTORS SHALL VERIFY AND BE RESPONSIBLE FOR ALL DIMENSIONS AND CONDITIONS ON THE JOB AND THIS OFFICE MUST BE NOTIFIED OF ANY VARIATIONS FROM THE DIMENSIONS AND CONDITIONS SHOWN BY THESE DRAWINGS. SHOP DETAILS MUST BE SUBMITTED TO THIS OFFICE FOR REVIEW BEFORE PROCEEDING WITH FABRICATION.

LEWISROSS ASSOCIATES, INC
MEP ENGINEERS
25061 AVENUE STANFORD,
VALENCIA, CA 91355
PHONE: (818) 886-2190 FAX: (818) 886-2131

PROJECT NAME: 23-115
PROJECT NAME: BCHD allcove
PROJECT ADDRESS: -

REV	DESCRIPTION	DATE

allcove
BEACH CITIES HEALTH DISTRICT

100% PRELIMINARY DESIGN SUBMITTAL

PMA PROJECT NO. 23007
DRAWING TITLE:
2ND FLOOR HVAC PLAN

SCALE: AS SHOWN
DATE: 02/28/2024
DRAWN BY: UK
CHECKED BY: TP
SHEET NO. **M-1.1**

COPYRIGHT LEWIS ROSS ASSOCIATES

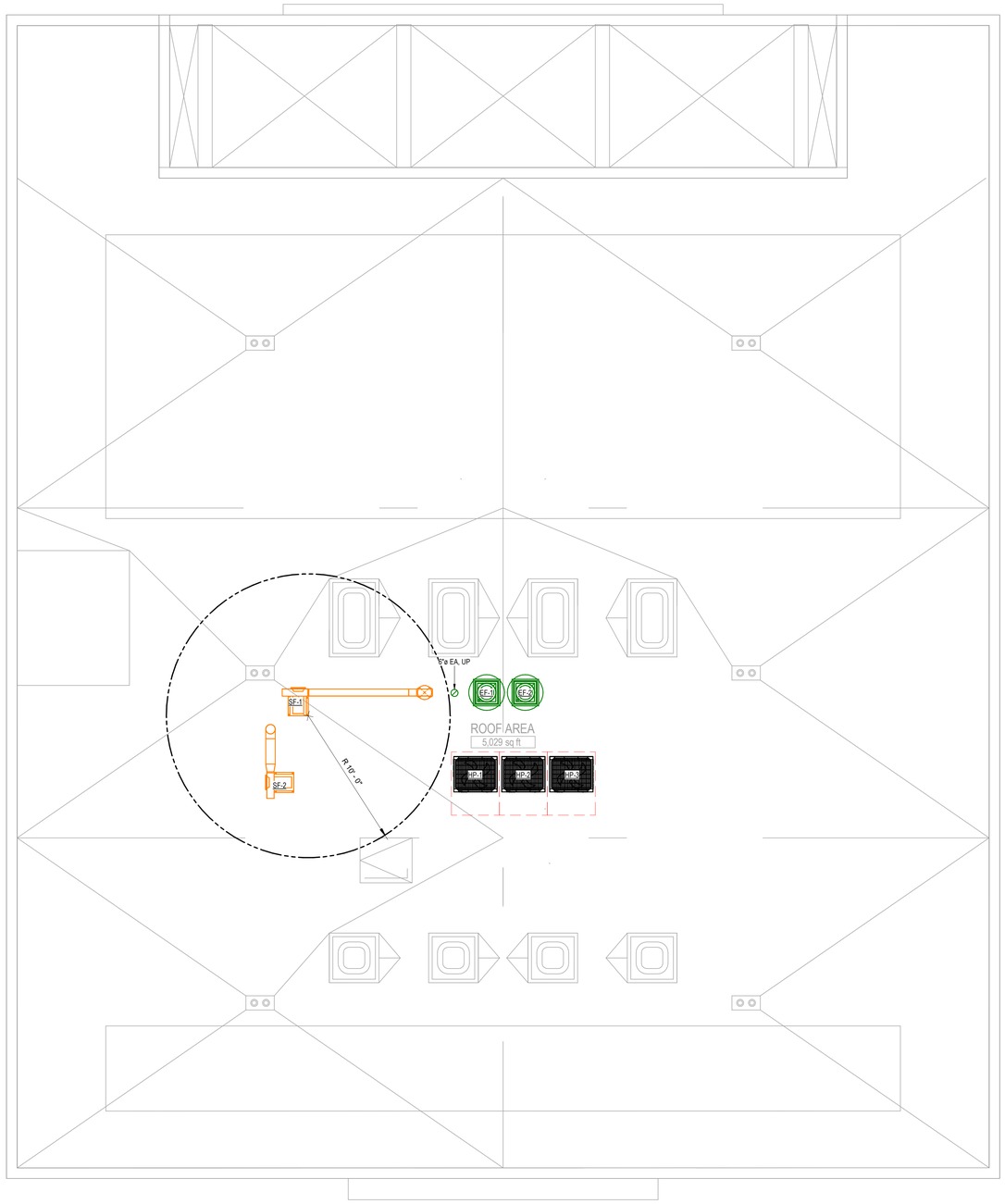

1 **ROOF HVAC PLAN**
1/4" = 1'-0"

PAUL MURDOCH ARCHITECTS
6310 SAN VICENTE BLVD. SUITE 400
LOS ANGELES, CA 90048
T. 310 358-0993

THE DRAWINGS AND SPECIFICATIONS AND IDEAS, DESIGNS, AND ARRANGEMENTS REPRESENTED THEREBY ARE AND SHALL REMAIN THE PROPERTY OF THE ARCHITECT, AND NO PART THEREOF SHALL BE COPIED, DISCLOSED TO OTHERS, OR USED IN CONNECTION WITH ANY WORK OR PROJECT OTHER THAN THE SPECIFIC PROJECT FOR WHICH THEY HAVE BEEN PREPARED AND DEVELOPED WITHOUT THE WRITTEN CONSENT OF THE ARCHITECT. VISUAL CONTACT WITH THESE DRAWINGS OR SPECIFICATIONS SHALL CONSTITUTE CONCLUSIVE EVIDENCE OF ACCEPTANCE OF THESE RESTRICTIONS. WRITTEN DIMENSIONS ON THESE DRAWINGS SHALL HAVE PRECEDENCE OVER SCALED DIMENSIONS. CONTRACTORS SHALL VERIFY AND BE RESPONSIBLE FOR ALL DIMENSIONS AND CONDITIONS ON THE JOB AND THIS OFFICE MUST BE NOTIFIED OF ANY VARIATIONS FROM THE DIMENSIONS AND CONDITIONS SHOWN BY THESE DRAWINGS. SHOP DETAILS MUST BE SUBMITTED TO THIS OFFICE FOR REVIEW BEFORE PROCEEDING WITH FABRICATION.

LEWISROSS ASSOCIATES, INC
MEP ENGINEERS
25061 AVENUE STANFORD,
VALENCIA, CA 91355
PHONE: (818) 886-2190 FAX: (818) 886-2131

PROJECT NAME: 23-115
PROJECT NAME: BCHD allcove
PROJECT ADDRESS: -

REV	DESCRIPTION	DATE

allcove
BEACH CITIES HEALTH DISTRICT

100% PRELIMINARY DESIGN SUBMITTAL

PMA PROJECT NO. 23007
DRAWING TITLE:
ROOF HVAC PLAN

SCALE: AS SHOWN
DATE: 02/28/2024
DRAWN BY: UK
CHECKED BY: TP

SHEET NO. **M-1.2**

COPYRIGHT LEWIS ROSS ASSOCIATES

GENERAL NOTES

COMMON

1. THE WORK OF THIS SECTION INCLUDES ALL PLUMBING WORK AND EQUIPMENT NECESSARY FOR A COMPLETE, APPROVED, AND PROPERLY FUNCTIONING INSTALLATION. PROVIDE ANY SUPPLEMENTARY LABOR OR MATERIALS, WHETHER OF NOT SPECIFICALLY INDICATED, WITHOUT ADDITIONAL COST TO THE OWNER.
2. ITEMS MARKED (N) OR SHOWN DARK ARE NEW. ITEMS MARKED (E) OR SHOWN LIGHT ARE EXISTING TO REMAIN. DIAGONALLY HATCHED ITEMS INDICATE EXISTING ITEMS TO BE DEMOLISHED.
3. ACQUIRE AND PAY FOR ALL PERMITS, INSPECTIONS, AND RELATED FEES FOR THIS INSTALLATION. MAKE ALL ARRANGEMENTS WITH UTILITY COMPANIES FOR SERVICE AND CONNECTIONS.
4. VERIFY AND COORDINATE ROUGH-IN LOCATIONS AND DIMENSIONS FOR EQUIPMENT. PROVIDE ALL INTERCONNECTING PIPING AND APPURTENANCES REQUIRED AND MAKE ALL FINAL CONNECTIONS.
5. INSTALL ALL PLUMBING IN COORDINATION WITH ELECTRICAL, MECHANICAL, ARCHITECTURAL, AND STRUCTURAL DRAWINGS AND TRADES.
6. VERIFY EXACT SIZE, LOCATIONS, AND DEPTH (WHERE APPLICABLE) OF ALL EXISTING PIPING, LINES, LATERALS, AND WYES BEFORE STARTING TRENCHING OR ANY OTHER WORK. VERIFY THAT INVERT ELEVATIONS ARE SUFFICIENT TO MAINTAIN REQUIRED SLOPES. SHOULD IT BE NECESSARY TO REROUTE LINES DUE TO CONDITIONS FOUND ON THE SITE OR IF INDICATED POINTS OF CONNECTIONS CANNOT BE MADE TO THE LINES AS FOUND, THE CONTRACTOR SHALL, BEFORE CONTINUING, NOTIFY THE ARCHITECT PRIOR TO INSTALLING ANY WORK WHICH MAY BE AFFECTED.
7. INSULATE HOT AND COLD WATER PIPING WITHIN 5' OF THE HEAT SOURCE IN NON-RECIRCULATING SYSTEMS, BOTH BURIED AND EXPOSED, WITH MINIMUM 1" THICK MANVILLE MICROLOCK 850-APT FIBERGLASS SNAP-ON INSULATION (PER CEC s150(j)2 AND s151(F)8d)
8. PROVIDE SCHEDULE EQUIPMENT "OR EQUAL", WHICH MEANS EQUIVALENT OR SUPERIOR IN PERFORMANCE, MATERIAL, WORKMANSHIP, AND APPEARANCE TO THOSE SPECIFIED, MAKE NO SUBSTITUTIONS WITHOUT PRIOR OWNER APPROVAL.
9. VERIFICATION OF DIMENSIONS: SCALED AND FIGURED DIMENSIONS ARE APPROXIMATE. BEFORE PROCEEDING WITH ANY WORK, CHECK AND VERIFY DIMENSIONS AND SIZES, AND ASSUME FULL RESPONSIBILITY FOR FITTING IN OF EQUIPMENT AND MATERIALS TO OTHER PARTS OF EQUIPMENT AND TO THE STRUCTURE. WHERE APPARATUS AND EQUIPMENT HAVE BEEN INDICATED ON THE DRAWINGS, DIMENSIONS HAVE BEEN TAKEN FROM TYPICAL EQUIPMENT OF THE CLASS INDICATED ON THE DRAWINGS, DIMENSIONS HAVE BEEN TAKEN FROM TYPICAL EQUIPMENT OF THE CLASS INDICATED, CHECK DRAWINGS TO SEE THAT EQUIPMENT CONTEMPLATED FOR USE WILL FIT INTO SPACES PROVIDED, WITH AMPLE SPACE FOR MAINTENANCE REQUIREMENTS.
10. LOCATIONS OF THE PIPING AND FIXTURES INDICATED ON THE DRAWINGS ARE APPROXIMATE ONLY AND SHALL BE CHANGED TO MEET THE ARCHITECTURAL AND STRUCTURAL CONDITIONS AS REQUIRED, AT NO EXTRA COST TO THE OWNER.
11. DRAWINGS: FOR CLARITY THESE DRAWINGS ARE ESSENTIALLY DIAGRAMMATIC TO THE EXTENT THAT ALL OFFSETS, BENDS, SPECIAL FITTINGS, AND EXACT LOCATIONS ARE NOT INDICATED. LOCATION OF PIPING MAY VARY AS LONG AS INDICATED PIPE SIZES ARE INSTALLED. EXAMINE DRAWINGS AND PREMISES IN ORDER TO DETERMINE BEST METHODS, EXACT LOCATIONS, ROUTES AND BUILDING OBSTRUCTIONS, INSTALL APPARATUS AND EQUIPMENT IN AVAILABLE LOCATIONS.
12. COMPLY WITH ALL APPLICABLE ORDINANCES, REGULATIONS, AND CODES. CONTRACTOR SHALL POSSESS A WORKING KNOWLEDGE OF ALL APPLICABLE CODES AND ORDINANCES AND SHALL CALL ATTENTION TO ANY DISCREPANCIES AND SEEK CLARIFICATIONS PRIOR TO SUBMITTING BID. ALL MATERIAL DEVICES AND EQUIPMENT SHALL BE APPROVED FOR SUCH INSTALLATION. IN CASE OF CONFLICT BETWEEN CODES AND DRAWINGS OR SPECIFICATIONS, THE MORE STRINGENT SHALL PREVAIL.
13. NOTHING IN THESE DRAWINGS AND SPECIFICATIONS IS TO BE CONSTRUED TO PERMIT WORK IN VIOLATION THEREOF.
14. NO EXTRAS WILL BE PAID FOR FURNISHING ITEMS REQUIRED BY THE CODES, BUT NOT SPECIFIED OR SHOWN ON THE DRAWINGS.
15. RULINGS AND INTERPRETATIONS OF THE ENFORCING AGENCIES SHALL BE CONSIDERED AS PART OF THE CODE.
16. ALL SEWER LINES SHALL SLOPE AT 1/4" PER FOOT (2%) OR MORE.
17. TEST SEWER PIPING TO ENSURE IT IS WATER TIGHT AT ALL POINTS BY PLUGGING THE END OF THE BUILDING SEWER AT ITS POINTS OF CONNECTION TO THE EXISTING SEWER AND COMPLETELY FILL WITH WATER FROM THE LOWEST POINT TO THE HIGHEST POINT THEREOF, OR BY APPROVED EQUIVALENT LOW-PRESSURE AIR TEST. PLASTIC DWV PIPING SHALL NOT BE TESTED BY THE AIR TEST METHOD.
18. INSULATE ALL EXPOSED HOT WATER AND DRAIN PIPING BELOW HANDICAP LAVATORIES AND SINKS WITH PROWRAP INSULATION KIT BY MCGUIRE AND OFFSET P-TRAP AGAINST WALL.
19. ALL REQUIRED CLEANOUTS SHALL BE INSTALLED AS PER SECTION 707.0 & 719.0 OF THE PLUMBING CODE. ALL FLOOR CLEANOUT COVERING DECKS SHALL HAVE FINE FINISH. INSTALL ONLY WHERE EASILY ACCESSIBLE AND COORDINATE LOCATIONS WITH THE ARCHITECT PRIOR TO INSTALLATION TO ACCOUNT FOR ALL EQUIPMENT, CABINETS, AND OTHER TRADES.
20. ALL SERVICE OUTLETS FOR FIXTURES AND EQUIPMENT SHALL BE PROVIDED WITH A LINE SIZE SHUT OFF VALVE.
21. ALL PLUMBING MATERIALS USED IN THE WATER SUPPLY SYSTEM, EXCEPT VALVES AND SIMILAR DEVICES, SHALL BE OF LIKE MATERIALS.
22. PROVIDE SHUTOFF VALVES ON PIPES AT POINT OF TIE-IN TO EXISTING SYSTEM. ALL VALVES, UNIONS, AND FITTINGS TO BE OF THE SAME SIZE AS THE PIPE UNLESS OTHERWISE NOTED. UNIONS SHALL BE PROVIDED AFTER EACH VALVE PRIOR TO ALL EQUIPMENT CONNECTIONS.
23. NEW OR REPAIRED POTABLE WATER SYSTEMS SHALL BE DISINFECTED PRIOR TO USE ACCORDING TO THE METHOD SET IN SECTION 609.9 OF THE PLUMBING CODE.
24. ALL PLUMBING FIXTURES, PIPING, AND MATERIALS, SHALL BE LISTED OR LABELED AND INSTALLED AS PER A RECOGNIZED APPROVAL AGENCY.

ABBREVIATIONS

(E)	EXISTING
(N)	NEW
(R)	REMOVE
(RE)	RELOCATED
A/C	AIR CONDITIONER
AHJ	AUTHORITY HAVING JURISDICTION
ARCH	ARCHITECTURAL
ANV	ANGLE VALVE
AS	AUTOMATIC FIRE SPRINKLERS
BC	BALANCING COCK
BFP	BACKFLOW PREVENTER
BLV	BALL VALVE
CA	COMPRESSED AIR
CD	CONDENSATE DRAIN
CHWR	CHILLED WATER RETURN
CHWS	CHILLED WATER SUPPLY
CLWV	COMBINATION LAB WASTE AND VENT
CO	CLEAN OUT
CSP	COMBINATION STANDPIPE
CTR	CENTER
CTRTOP.	COUNTERTOP
CV	SWING CHECK VALVE
CW	COLD WATER
ID	INDIRECT DRAIN
DEMO	DEMOLISH
DW	DEIONIZED WATER
DN	DOWN
DWG	DRAWING
EM	EMERGENCY
F	FIRE PROTECTION SUPPLY
FC	FLEXIBLE CONNECTION
FOC	FLOOR CLEANOUT, CLEANOUT TO GRADE
FD	FLOOR DRAIN
FHC	FIRE HOSE CABINET
FHV	FIRE HOSE VALVE
FLA	FULL LOAD AMPS
FLS	FLOW SWITCH
FOV	FUEL OIL VENT
FOR	FUEL OIL RETURN
FOS	FUEL OIL SUPPLY
FPC	FIRE PROTECTION OUTLET
FS	FLOOR SINK
FU	PLUMBING FIXTURE UNIT
G	GAS - LOW PRESSURE
GALV	GALVANIZED
GC	GAS COCK, GAS STOP
GLV	GLOVE VALVE
GV	GATE VALVE
GW	GREASE WASTE
HB	HOSE BIBB
HD	HUB DRAIN
HDR	HEADER
HHWR	HEATING HOT WATER RETURN
HHWS	HEATING HOT WATER SUPPLY
HW	HOT WATER
HWR	HOT WATER RETURN
ICW	INDUSTRIAL COLD WATER
INV	INVERT ELEVATION
LP	LIQUIFIED PETROLEUM / PROPANE
LV	LABORATORY VENT
LW	LABORATORY WASTE
MECH	MECHANICAL
MPG	MEDIUM PRESSURE GAS
LPG	LOW PRESSURE GAS
N	NITROGEN
NCV	NON-SLAM CHECK VALVE
NG	NATURAL GAS
NIC	NOT IN CONTRACT
NTS	NOT TO SCALE
O2	OXYGEN
PRV	PRESSURE REDUCING VALVE
PS	PRESSURE SWITCH
PTR	PRESSURE-TEMPERATURE RELIEF VALVE
PW	PURE WATER
PWR	PURE WATER RETURN
R	REFRIGERANT
RO	REVERSE OSMOSIS
SCW	SOFT COLD WATER
SD	STORM DRAIN
SED	SEWAGE EJECTOR DISCHARGE
SPD	SUMP PUMP DISCHARGE
SPO	SOIL PLUGGED OUTLET
SS	SANITARY SEWER
TYP.	TYPICAL
U/G	UNDERGROUND
UNO	UNLESS NOTED OTHERWISE
V	VENT
VAC	VACUUM
VCO	VENT CAPPED OUTLET
VIF	VERIFY IN FIELD
VTR	VENT THROUGH ROOF
WCO	WALL CLEANOUT
WHA	WATER HAMMER ARRESTOR
WP	WATERPROOF
XFMR	TRANSFORMER

PLUMBING LEGEND

	ANGLE VALVE
	BALANCING COCK
	BALL VALVE
	BACKFLOW PREVENTER
	CAP OR PLUG ON END OF PIPE
	CLEANOUT
	COLD WATER
	DEMOLISH
	FIRE HOSE CABINET (RECESSED)
	FIRE HOSE CABINET (SURFACE MOUNTED)
	FIRE HOSE VALVE
	FLOW SWITCH
	FLOOR CLEANOUT, CLEANOUT TO GRADE
FOV	FUEL OIL VENT
	GAS COCK, GAS STOP
	GATE VALVE
	GLOVE VALVE
GW	GREASE WASTE
GW	(SHOWN AS DOUBLE LINE BELOW GROUND)
	HOSE BIBB
	HOT WATER
	HOT WATER RETURN
LV	LABORATORY VENT
LW	LABORATORY WASTE
LW	(SHOWN AS DOUBLE LINE BELOW GROUND)
	NON-SLAM CHECK VALVE
	PRESSURE REDUCING VALVE
	PRESSURE SWITCH
	PRESSURE-TEMPERATURE RELIEF VALVE
	RISER DOWN
	RISER UP
	RISE OR DROP
SS	SANITARY SEWER
SS	(SHOWN AS DOUBLE LINE BELOW GROUND)
	SEWER OR WASTE ABOVE GRADE
	SEWER OR WASTE BELOW GRADE
SD	STORM DRAIN ABOVE GRADE
SD	STORM DRAIN BELOW GRADE
	SWING CHECK VALVE
	VALVE IN RISER
V	VENT
	WALL CLEANOUT
	WATER HAMMER ARRESTOR
1 / P-1	DETAIL TOP - I.D. NUMBER REF. BOTTOM - SHT. NUMBER
1 / P-1	SECTION TOP - I.D. NUMBER REF. BOTTOM - SHT. NUMBER

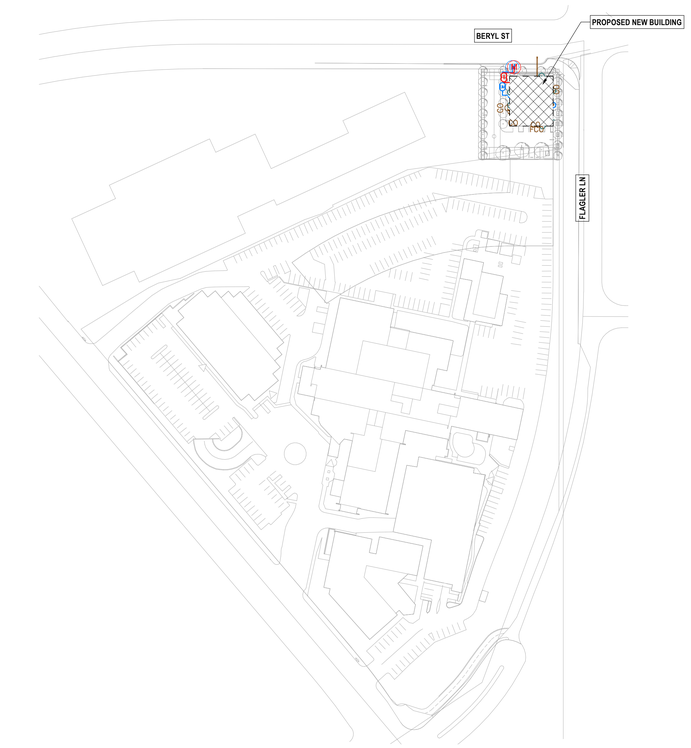

1 **OVERALL SITE PLAN**
1" = 100'-0"

PLUMBING MATERIAL SCHEDULE

SERVICE	LOCATION	COPPER TYPE 'M' (THIN WALLED)	COPPER TYPE 'L' (MEDIUM WALLED)	COPPER TYPE 'K' (THICK WALLED)7	PVC SCHEDULE 80 8	CAST IRON2	KEYED NOTES
WATER	INSIDE		●				1
	OUTSIDE		●				1
	BELOW GRADE			●	●		
SANITARY DRAINAGE	INSIDE					●	3
	BELOW GRADE					●	5,6
SANITARY VENT						●	4
CONDENSATE DRAINAGE	INSIDE	●					
	OUTSIDE		●				
INDIRECT WASTE	INSIDE		●				1
	OUTSIDE		●				1

NOTES:
1. LEAD FREE SOLDERED FITTINGS.
2. ABS IS NOT ALLOWED IN BUILDINGS OVER TWO STORIES. PROVIDE CAST IRON DWV.
3. TYLER 4 BAND NO-HUB COUPLINGS.
4. TYLER 2 BAND NO-HUB COUPLINGS.
5. DO NOT USE IN VERTICAL RISER.
6. GASKETED JOINT FOR PVC.
7. 3" AND SMALLER, SOFT TEMPER BRAZED JOINTS W/ BITUMINOUS COATING.
8. TEMPERATURES NOT TO EXCEED 120°F, NOT ALLOWED INSIDE OR BELOW BUILDING.

STANDARD PIPE SUPPORT SPACING SCHEDULE

PIPE SIZE	SUPPORT ROD DIAMETER	MAX SUPPORT SPAN, STEEL PIPE (FT)	MAX SUPPORT SPAN, COPPER PIPE (FT)
1/2"	3/8"	5	5
3/4"	3/8"	8	8
1"	3/8"	8	8
1-1/2"	3/8"	8	8
2"	3/8"	10	8
2-1/2"	1/2"	10	-
3"	1/2"	10	-
3-1/2"	1/2"	10	-
4"	5/8"	10	-

WASTE & VENT SIZING CHART

PIPE SIZE	DRAINAGE FU	VENT FU
1 1/2"	2	8
2"	8	24
2 1/2"	14	48
3"	35	84
4"	216	256
6"	720	1380

PLUMBING FIXTURE SCHEDULE

- PROVIDE DAHL OR BRASSCRAFT 1/4 TURN STOP VALVES, SUPPLY TUBES, AND ESCUTCHEON PLATES FOR ALL FIXTURES.
- SUBMIT ALL FIXTURES TO ARCHITECT FOR APPROVAL PRIOR TO PURCHASE

TAG	DESCRIPTION	SIMILAR TO		WASTE	VENT	COLD WATER	HOT WATER	NOTES
		MFR	MODEL					
DF	DRINKING WATER FOUNTAIN	BY ARCHITECT	BY ARCHITECT	2"	1 1/2"	1/2"		
HB	COLD WATER STUB W/ ANGLE STOP VALVE					1/2"		
IM	COLD WATER STUB W/ ANGLE STOP VALVE					1/2"		ICE MAKER
LAV	WALL-HUNG LAVATORY	BY ARCHITECT	BY ARCHITECT	2"	1 1/2"	1/2"	1/2"	VERIFY SPEC W/ ARCHITECT
LS	LAUNDRY SINK	BY ARCHITECT	BY ARCHITECT	2"	1 1/2"	3/4"	3/4"	VERIFY SPEC W/ ARCHITECT
OSD	15 Diameter Roof Drain	Zurn Industries, LLC	Z1715-3BW	0"				
SD	15 Diameter Roof Drain	Zurn Industries, LLC	Z1715-3BW	0"				
SE	SINK, EXAM	BY ARCHITECT	BY ARCHITECT	1 1/2"	1 1/2"	1/2"	1/2"	VERIFY SPEC W/ ARCHITECT
SH	SHOWER	BY ARCHITECT	BY ARCHITECT	2"	1 1/2"	1/2"	1/2"	VERIFY SPEC W/ ARCHITECT
SK	SINK, KITCHEN	BY ARCHITECT	BY ARCHITECT	1 1/2"	1 1/2"	3/4"	1/2"	VERIFY SPEC W/ ARCHITECT
UR	WALL-HUNG URINAL	<varies>	<varies>	2"	1 1/2"	3/4"		0.5 GPF, BACK-SPUD. PROVIDE ECOPOWER HIGH-EFFICIENCY URINAL FLUSH VALVE.
WC	WATER CLOSET	BY ARCHITECT	BY ARCHITECT	3"	2"	1 1/4"		VERIFY SPEC W/ ARCHITECT
WM-D						0"	0"	
WM-F						0"	0"	

WATER HEATER SCHEDULE - ELECTRIC STORAGE

TAG	SIMILAR TO		STORAGE CAPACITY	RECOVERY @ 60°F RISE	ELECTRICAL				HW	CW	REMARKS
	MFR	MODEL			MOCP	Ø	V	W			
WH-1	RHEEM	PROPH50	50.0 gal	0 GPM	15 A	1	120 V	4500 VA		1"	HEAT PUMP WATER HEATER , PROVIDE EXPANSION TANK & HOT WATER RECIRCULATION PUMP

SCOPE OF WORK

DOMESTIC WATER, WASTE AND VENT PIPING FOR NEW MULTI-PURPOSE CENTER.

SHEET INDEX - PLUMBING

SHEET NO.	SHEET NAME
P-0.1	PLUMBING LEAD SHEET
P-0.2	PLUMBING SITE PLAN
P-1.0	BELOW GROUND PLUMBING PLAN
P-1.1	FIRST FLOOR PLUMBING PLAN
P-1.2	SECOND FLOOR PLUMBING PLAN
P-1.3	ROOF PLUMBING PLAN
P-3-0	RISER DIAGRAMS
P-5.0	PLUMBING DETAILS
PS-1.0	FIRST FLOOR STORM WATER DRAINAGE PLAN
PS-1.1	SECOND FLOOR STORM WATER DRAINAGE PLAN
PS-1.2	ROOF STORM WATER PLAN

PAUL MURDOCH ARCHITECTS
6310 SAN VICENTE BLVD. SUITE 400
LOS ANGELES, CA 90048
T. 310 358-0993

THE DRAWINGS AND SPECIFICATIONS AND IDEAS, DESIGNS, AND ARRANGEMENTS REPRESENTED THEREBY ARE AND SHALL REMAIN THE PROPERTY OF THE ARCHITECT, AND NO PART THEREOF SHALL BE COPIED, DISCLOSED TO OTHERS, OR USED IN CONNECTION WITH ANY WORK OR PROJECT OTHER THAN THE SPECIFIC PROJECT FOR WHICH THEY HAVE BEEN PREPARED AND DEVELOPED WITHOUT THE WRITTEN CONSENT OF THE ARCHITECT. VISUAL CONTACT WITH THESE DRAWINGS OR SPECIFICATIONS SHALL CONSTITUTE CONCLUSIVE EVIDENCE OF ACCEPTANCE OF THESE RESTRICTIONS. WRITTEN DIMENSIONS ON THESE DRAWINGS SHALL HAVE PRECEDENCE OVER SCALED DIMENSIONS. CONTRACTORS SHALL VERIFY AND BE RESPONSIBLE FOR ALL DIMENSIONS AND CONDITIONS ON THE JOB AND THIS OFFICE MUST BE NOTIFIED OF ANY VARIATIONS FROM THE DIMENSIONS AND CONDITIONS SHOWN BY THESE DRAWINGS. SHOP DETAILS MUST BE SUBMITTED TO THIS OFFICE FOR REVIEW BEFORE PROCEEDING WITH FABRICATION.

LEWISROSS ASSOCIATES, INC
MEP ENGINEERS
25061 AVENUE STANFORD,
VALENCIA, CA 91355
PHONE: (818) 886-2190 FAX: (818) 886-2131

PROJECT NAME: 23-115
PROJECT NAME: BCHD allcove
PROJECT ADDRESS: -

REV	DESCRIPTION	DATE

allcove
BEACH CITIES HEALTH DISTRICT

100% PRELIMINARY DESIGN SUBMITTAL

PMA PROJECT NO. 23007
DRAWING TITLE:
PLUMBING LEAD SHEET

SCALE: AS SHOWN
DATE: 02/28/2024
DRAWN BY: UK
CHECKED BY: TP
SHEET NO. P-0.1

COPYRIGHT LEWIS ROSS ASSOCIATES

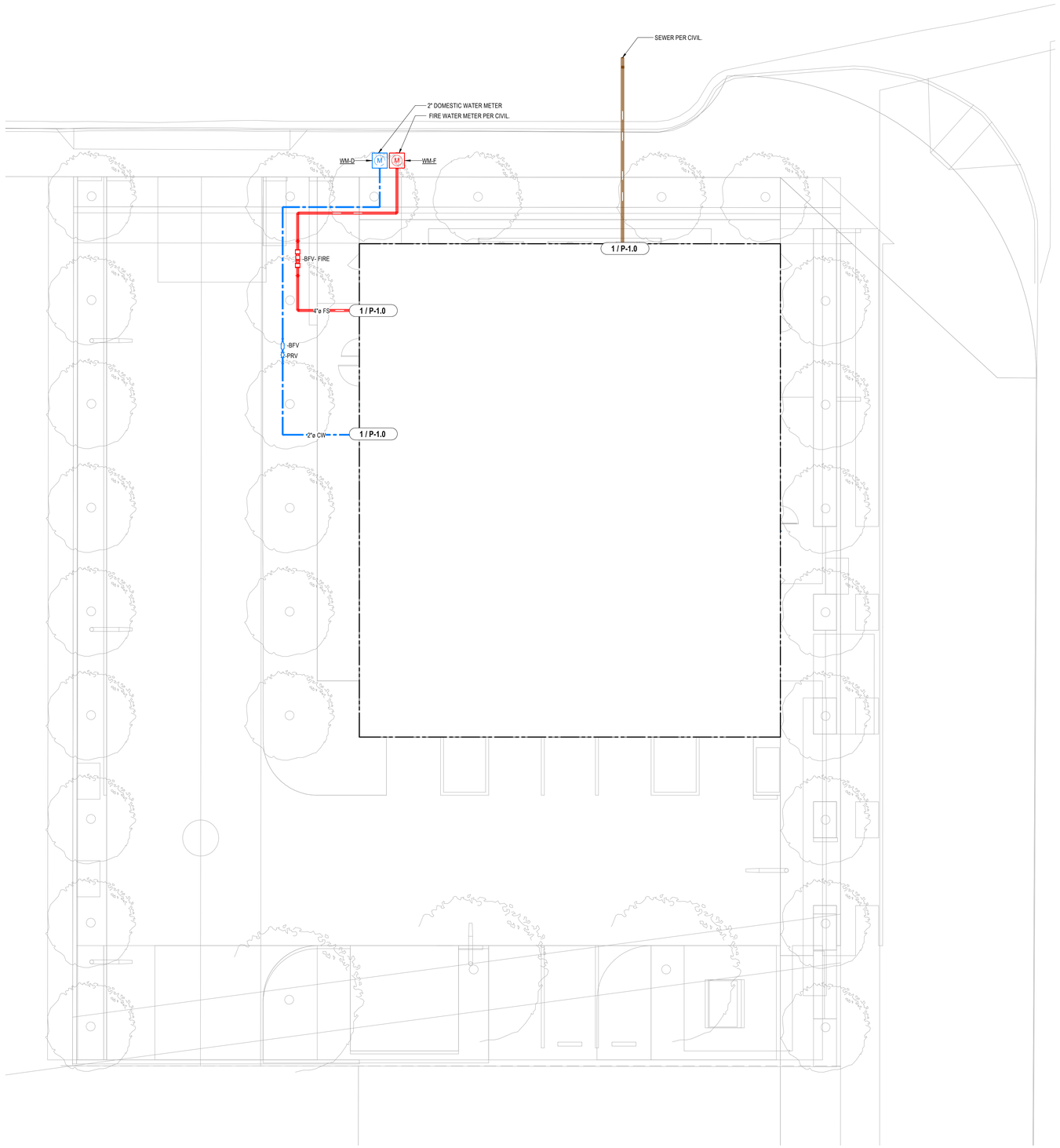

1 **PLUMBING SITE PLAN**
1/8" = 1'-0"

PAUL MURDOCH ARCHITECTS
6310 SAN VICENTE BLVD. SUITE 400
LOS ANGELES, CA 90048
T. 310 358-0993

THE DRAWINGS AND SPECIFICATIONS AND IDEAS, DESIGNS, AND ARRANGEMENTS REPRESENTED THEREBY ARE AND SHALL REMAIN THE PROPERTY OF THE ARCHITECT, AND NO PART THEREOF SHALL BE COPIED, DISCLOSED TO OTHERS, OR USED IN CONNECTION WITH ANY WORK OR PROJECT OTHER THAN THE SPECIFIC PROJECT FOR WHICH THEY HAVE BEEN PREPARED AND DEVELOPED WITHOUT THE WRITTEN CONSENT OF THE ARCHITECT. VISUAL CONTACT WITH THESE DRAWINGS OR SPECIFICATIONS SHALL CONSTITUTE CONCLUSIVE EVIDENCE OF ACCEPTANCE OF THESE RESTRICTIONS. WRITTEN DIMENSIONS ON THESE DRAWINGS SHALL HAVE PRECEDENCE OVER SCALED DIMENSIONS. CONTRACTORS SHALL VERIFY AND BE RESPONSIBLE FOR ALL DIMENSIONS AND CONDITIONS ON THE JOB AND THIS OFFICE MUST BE NOTIFIED OF ANY VARIATIONS FROM THE DIMENSIONS AND CONDITIONS SHOWN BY THESE DRAWINGS. SHOP DETAILS MUST BE SUBMITTED TO THIS OFFICE FOR REVIEW BEFORE PROCEEDING WITH FABRICATION.

LEWISROSS ASSOCIATES, INC
MEP ENGINEERS
25061 AVENUE STANFORD,
VALENCIA, CA 91355
PHONE: (818) 886-2190 FAX: (818) 886-2131

PROJECT NAME: 23-115
PROJECT NAME: BCHD allcove
PROJECT ADDRESS: -

REV	DESCRIPTION	DATE

allcove
BEACH CITIES HEALTH DISTRICT

100% PRELIMINARY DESIGN SUBMITTAL

PMA PROJECT NO. 23007
DRAWING TITLE:
PLUMBING SITE PLAN

SCALE: AS SHOWN
DATE: 02/28/2024
DRAWN BY: UK
CHECKED BY: TP

SHEET NO. **P-0.2**

COPYRIGHT LEWIS ROSS ASSOCIATES

KEYNOTES PLUMBING

(#) NOTE

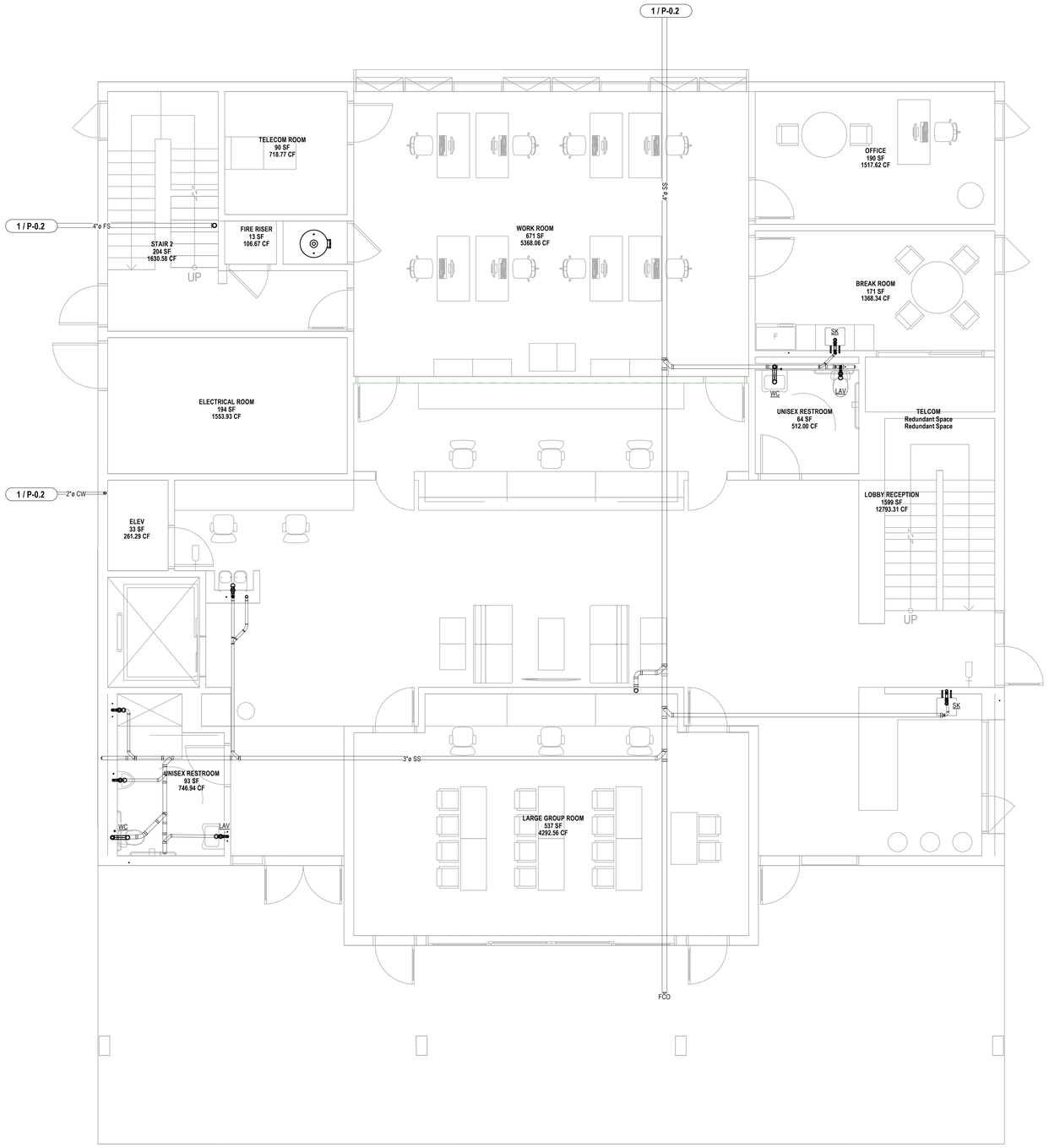

1 **BELOW GROUND PLUMBING PLAN**
1/4" = 1'-0"

PAUL MURDOCH ARCHITECTS
6310 SAN VICENTE BLVD. SUITE 400
LOS ANGELES, CA 90048
T. 310 358-0993

THE DRAWINGS AND SPECIFICATIONS AND IDEAS, DESIGNS, AND ARRANGEMENTS REPRESENTED THEREBY ARE AND SHALL REMAIN THE PROPERTY OF THE ARCHITECT, AND NO PART THEREOF SHALL BE COPIED, DISCLOSED TO OTHERS, OR USED IN CONNECTION WITH ANY WORK OR PROJECT OTHER THAN THE SPECIFIC PROJECT FOR WHICH THEY HAVE BEEN PREPARED AND DEVELOPED WITHOUT THE WRITTEN CONSENT OF THE ARCHITECT. VISUAL CONTACT WITH THESE DRAWINGS OR SPECIFICATIONS SHALL CONSTITUTE CONCLUSIVE EVIDENCE OF ACCEPTANCE OF THESE RESTRICTIONS. WRITTEN DIMENSIONS ON THESE DRAWINGS SHALL HAVE PRECEDENCE OVER SCALED DIMENSIONS. CONTRACTORS SHALL VERIFY AND BE RESPONSIBLE FOR ALL DIMENSIONS AND CONDITIONS ON THE JOB AND THIS OFFICE MUST BE NOTIFIED OF ANY VARIATIONS FROM THE DIMENSIONS AND CONDITIONS SHOWN BY THESE DRAWINGS. SHOP DETAILS MUST BE SUBMITTED TO THIS OFFICE FOR REVIEW BEFORE PROCEEDING WITH FABRICATION.

LEWISROSS ASSOCIATES, INC
MEP ENGINEERS
25061 AVENUE STANFORD,
VALENCIA, CA 91355
PHONE: (818) 886-2190 FAX: (818) 886-2131

PROJECT NAME: 23-115
PROJECT NAME: BCHD allcove
PROJECT ADDRESS: -

REV	DESCRIPTION	DATE

allcove
BEACH CITIES HEALTH DISTRICT

100% PRELIMINARY DESIGN SUBMITTAL

PMA PROJECT NO. 23007
DRAWING TITLE:
BELOW GROUND PLUMBING PLAN

SCALE: AS SHOWN
DATE: 02/28/2024
DRAWN BY: UK
CHECKED BY: TP

SHEET NO. **P-1.0**

COPYRIGHT LEWIS ROSS ASSOCIATES

KEYNOTES PLUMBING

(#) NOTE

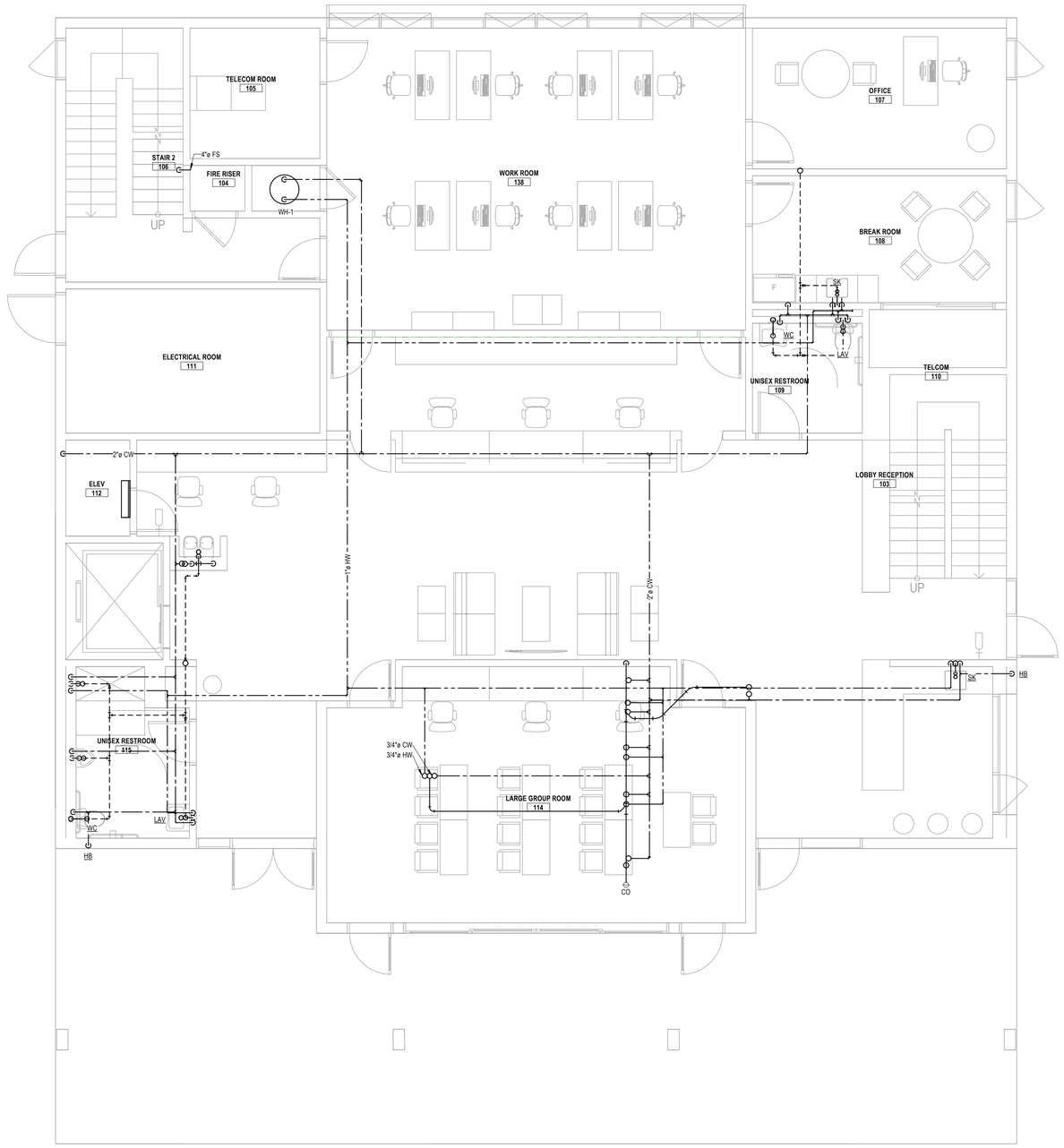

1 **1ST FLOOR PLUMBING PLAN**
1/4" = 1'-0"

PAUL MURDOCH ARCHITECTS
6310 SAN VICENTE BLVD. SUITE 400
LOS ANGELES, CA 90048
T. 310 358-0993

THE DRAWINGS AND SPECIFICATIONS AND IDEAS, DESIGNS, AND ARRANGEMENTS REPRESENTED THEREBY ARE AND SHALL REMAIN THE PROPERTY OF THE ARCHITECT, AND NO PART THEREOF SHALL BE COPIED, DISCLOSED TO OTHERS, OR USED IN CONNECTION WITH ANY WORK OR PROJECT OTHER THAN THE SPECIFIC PROJECT FOR WHICH THEY HAVE BEEN PREPARED AND DEVELOPED WITHOUT THE WRITTEN CONSENT OF THE ARCHITECT. VISUAL CONTACT WITH THESE DRAWINGS OR SPECIFICATIONS SHALL CONSTITUTE CONCLUSIVE EVIDENCE OF ACCEPTANCE OF THESE RESTRICTIONS. WRITTEN DIMENSIONS ON THESE DRAWINGS SHALL HAVE PRECEDENCE OVER SCALED DIMENSIONS. CONTRACTORS SHALL VERIFY AND BE RESPONSIBLE FOR ALL DIMENSIONS AND CONDITIONS ON THE JOB AND THIS OFFICE MUST BE NOTIFIED OF ANY VARIATIONS FROM THE DIMENSIONS AND CONDITIONS SHOWN BY THESE DRAWINGS. SHOP DETAILS MUST BE SUBMITTED TO THIS OFFICE FOR REVIEW BEFORE PROCEEDING WITH FABRICATION.

LEWISROSS ASSOCIATES, INC
MEP ENGINEERS
25061 AVENUE STANFORD,
VALENCIA, CA 91355
PHONE: (818) 886-2190 FAX: (818) 886-2131

PROJECT NAME: 23-115
PROJECT NAME: BCHD allcove
PROJECT ADDRESS: -

REV	DESCRIPTION	DATE

allcove
BEACH CITIES HEALTH DISTRICT

100% PRELIMINARY DESIGN SUBMITTAL

PMA PROJECT NO. 23007
DRAWING TITLE:
FIRST FLOOR PLUMBING PLAN

SCALE: AS SHOWN
DATE: 02/28/2024
DRAWN BY: UK
CHECKED BY: TP

SHEET NO. **P-1.1**

COPYRIGHT LEWIS ROSS ASSOCIATES

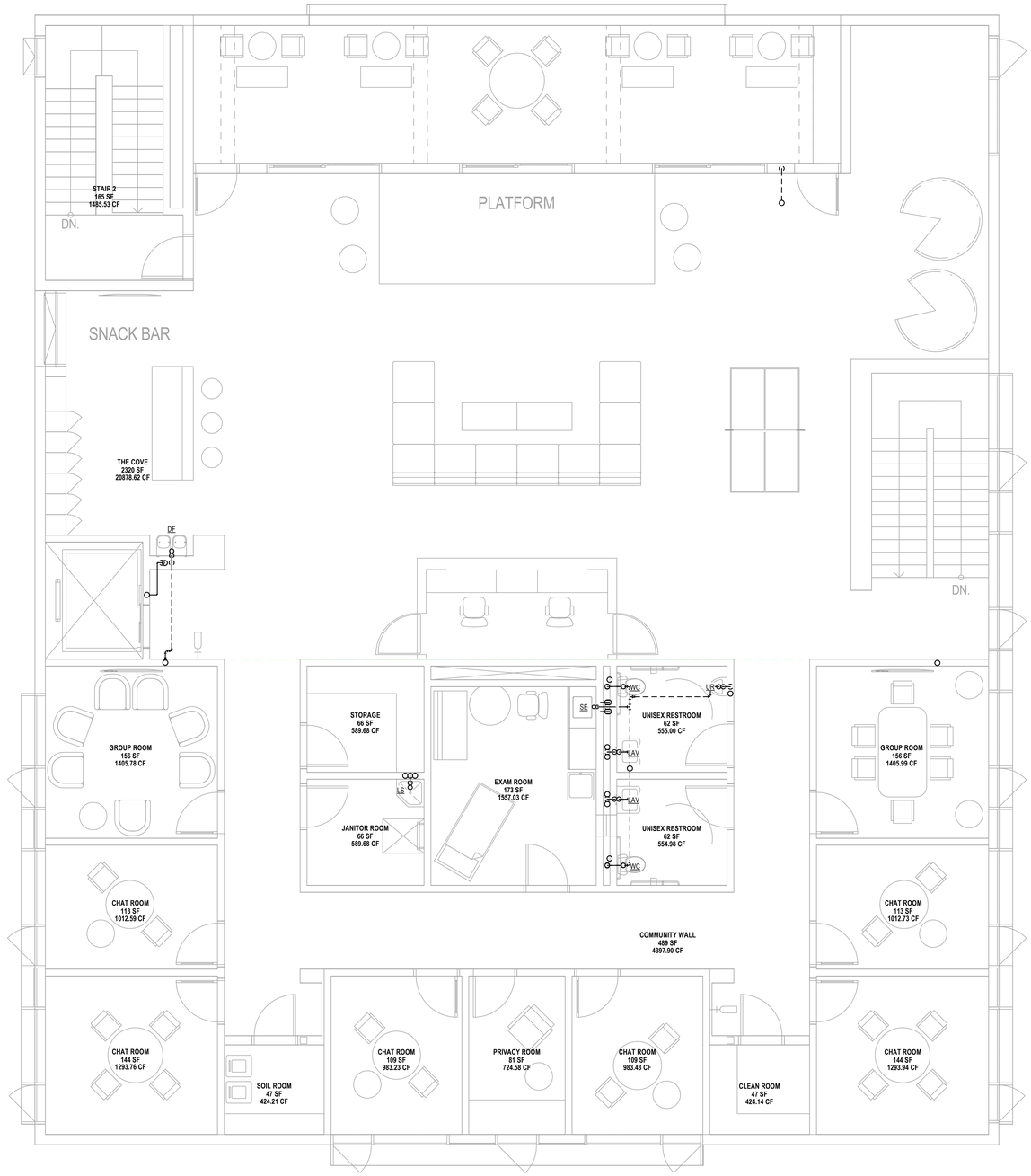

1 **2ND FLOOR PLUMBING PLAN**
1/4" = 1'-0"

PAUL MURDOCH ARCHITECTS
6310 SAN VICENTE BLVD. SUITE 400
LOS ANGELES, CA 90048
T. 310 358-0993

THE DRAWINGS AND SPECIFICATIONS AND IDEAS, DESIGNS, AND ARRANGEMENTS REPRESENTED THEREBY ARE AND SHALL REMAIN THE PROPERTY OF THE ARCHITECT, AND NO PART THEREOF SHALL BE COPIED, DISCLOSED TO OTHERS, OR USED IN CONNECTION WITH ANY WORK OR PROJECT OTHER THAN THE SPECIFIC PROJECT FOR WHICH THEY HAVE BEEN PREPARED AND DEVELOPED WITHOUT THE WRITTEN CONSENT OF THE ARCHITECT. VISUAL CONTACT WITH THESE DRAWINGS OR SPECIFICATIONS SHALL CONSTITUTE CONCLUSIVE EVIDENCE OF ACCEPTANCE OF THESE RESTRICTIONS. WRITTEN DIMENSIONS ON THESE DRAWINGS SHALL HAVE PRECEDENCE OVER SCALED DIMENSIONS. CONTRACTORS SHALL VERIFY AND BE RESPONSIBLE FOR ALL DIMENSIONS AND CONDITIONS ON THE JOB AND THIS OFFICE MUST BE NOTIFIED OF ANY VARIATIONS FROM THE DIMENSIONS AND CONDITIONS SHOWN BY THESE DRAWINGS. SHOP DETAILS MUST BE SUBMITTED TO THIS OFFICE FOR REVIEW BEFORE PROCEEDING WITH FABRICATION.

LEWISROSS ASSOCIATES, INC
MEP ENGINEERS
25061 AVENUE STANFORD,
VALENCIA, CA 91355
PHONE: (818) 886-2190 FAX: (818) 886-2131

PROJECT NAME: 23-115
PROJECT NAME: BCHD allcove
PROJECT ADDRESS: -

REV	DESCRIPTION	DATE

allcove
BEACH CITIES HEALTH DISTRICT

100% PRELIMINARY DESIGN SUBMITTAL

PMA PROJECT NO. 23007
DRAWING TITLE:
SECOND FLOOR PLUMBING PLAN

SCALE: AS SHOWN
DATE: 02/28/2024
DRAWN BY: UK
CHECKED BY: TP

SHEET NO. **P-1.2**

COPYRIGHT LEWIS ROSS ASSOCIATES

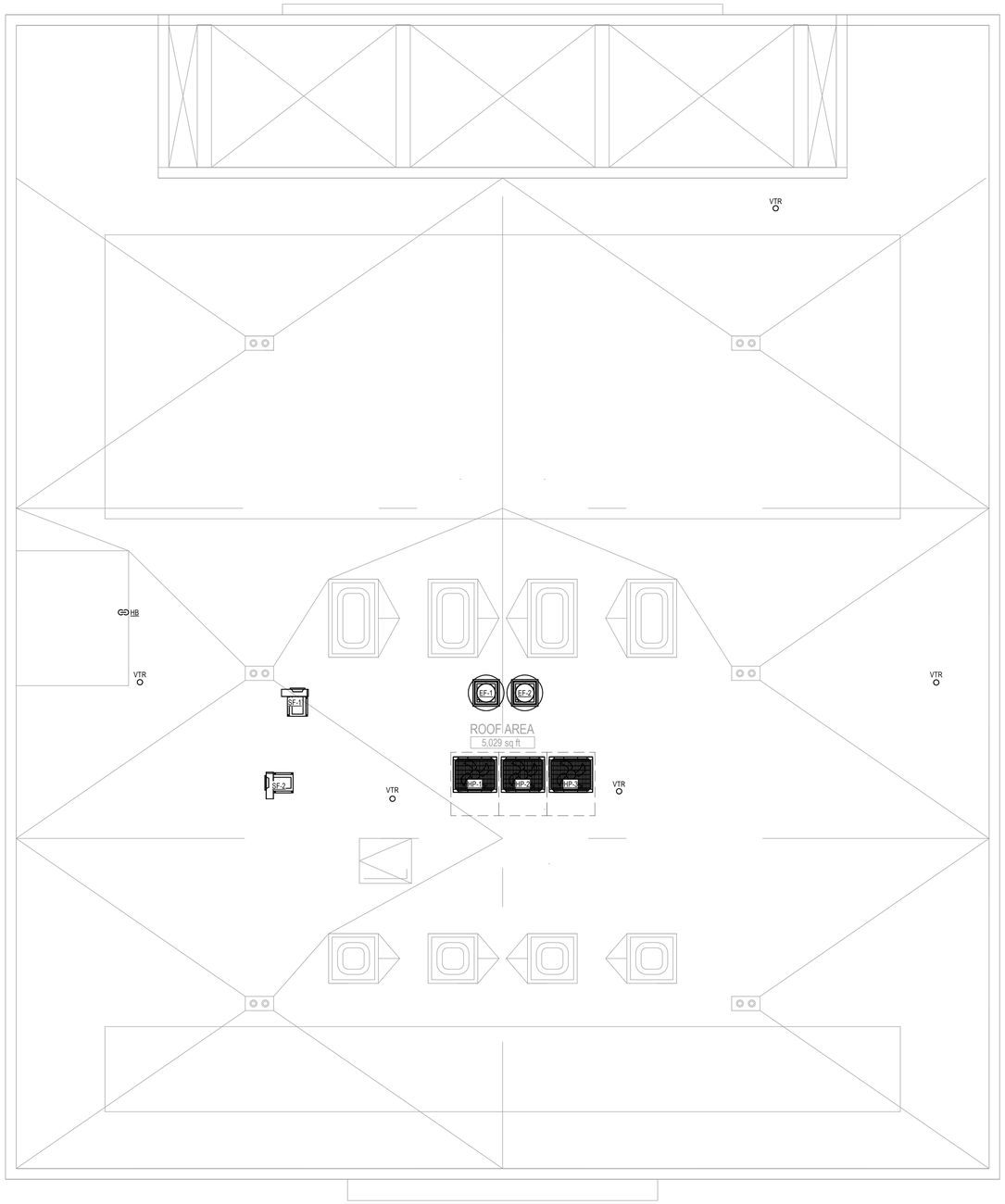

1 **ROOF PLUMBING PLAN**
1/4" = 1'-0"

PAUL MURDOCH ARCHITECTS
6310 SAN VICENTE BLVD. SUITE 400
LOS ANGELES, CA 90048
T. 310 358-0993

THE DRAWINGS AND SPECIFICATIONS AND IDEAS, DESIGNS, AND ARRANGEMENTS REPRESENTED THEREBY ARE AND SHALL REMAIN THE PROPERTY OF THE ARCHITECT, AND NO PART THEREOF SHALL BE COPIED, DISCLOSED TO OTHERS, OR USED IN CONNECTION WITH ANY WORK OR PROJECT OTHER THAN THE SPECIFIC PROJECT FOR WHICH THEY HAVE BEEN PREPARED AND DEVELOPED WITHOUT THE WRITTEN CONSENT OF THE ARCHITECT. VISUAL CONTACT WITH THESE DRAWINGS OR SPECIFICATIONS SHALL CONSTITUTE CONCLUSIVE EVIDENCE OF ACCEPTANCE OF THESE RESTRICTIONS. WRITTEN DIMENSIONS ON THESE DRAWINGS SHALL HAVE PRECEDENCE OVER SCALED DIMENSIONS. CONTRACTORS SHALL VERIFY AND BE RESPONSIBLE FOR ALL DIMENSIONS AND CONDITIONS ON THE JOB AND THIS OFFICE MUST BE NOTIFIED OF ANY VARIATIONS FROM THE DIMENSIONS AND CONDITIONS SHOWN BY THESE DRAWINGS. SHOP DETAILS MUST BE SUBMITTED TO THIS OFFICE FOR REVIEW BEFORE PROCEEDING WITH FABRICATION.

LEWISROSS ASSOCIATES, INC
MEP ENGINEERS
25061 AVENUE STANFORD,
VALENCIA, CA 91355
PHONE: (818) 886-2190 FAX: (818) 886-2131

PROJECT NAME: 23-115
PROJECT NAME: BCHD allcove
PROJECT ADDRESS: -

REV	DESCRIPTION	DATE

allcove
BEACH CITIES HEALTH DISTRICT

100% PRELIMINARY DESIGN SUBMITTAL

PMA PROJECT NO. 23007
DRAWING TITLE:
ROOF PLUMBING PLAN

SCALE: AS SHOWN
DATE: 02/28/2024
DRAWN BY: UK
CHECKED BY: TP

SHEET NO. **P-1.3**

COPYRIGHT LEWIS ROSS ASSOCIATES

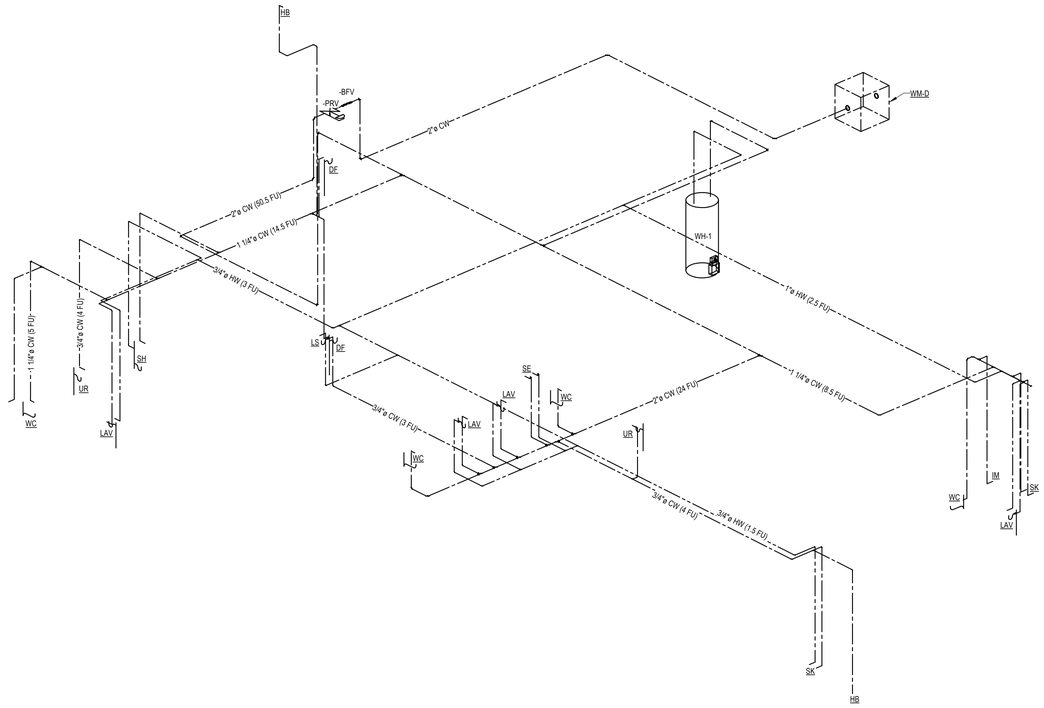

1 **H&C WATER RISER DIAGRAM**

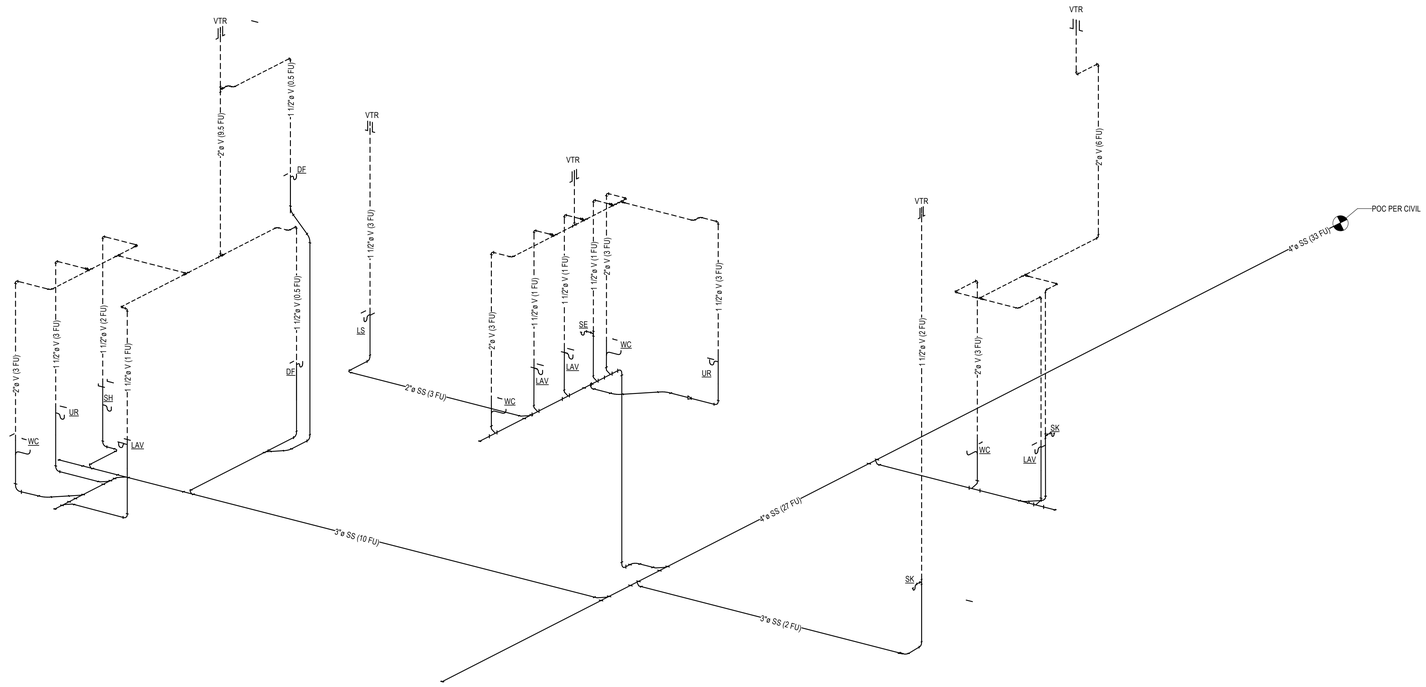

2 **DWV RISER DIAGRAM**

PAUL MURDOCH ARCHITECTS
6310 SAN VICENTE BLVD. SUITE 400
LOS ANGELES, CA 90048
T. 310 358-0993

THE DRAWINGS AND SPECIFICATIONS AND IDEAS, DESIGNS, AND ARRANGEMENTS REPRESENTED THEREBY ARE AND SHALL REMAIN THE PROPERTY OF THE ARCHITECT, AND NO PART THEREOF SHALL BE COPIED, DISCLOSED TO OTHERS, OR USED IN CONNECTION WITH ANY WORK OR PROJECT OTHER THAN THE SPECIFIC PROJECT FOR WHICH THEY HAVE BEEN PREPARED AND DEVELOPED WITHOUT THE WRITTEN CONSENT OF THE ARCHITECT. VISUAL CONTACT WITH THESE DRAWINGS OR SPECIFICATIONS SHALL CONSTITUTE CONCLUSIVE EVIDENCE OF ACCEPTANCE OF THESE RESTRICTIONS. WRITTEN DIMENSIONS ON THESE DRAWINGS SHALL HAVE PRECEDENCE OVER SCALED DIMENSIONS. CONTRACTORS SHALL VERIFY AND BE RESPONSIBLE FOR ALL DIMENSIONS AND CONDITIONS ON THE JOB AND THIS OFFICE MUST BE NOTIFIED OF ANY VARIATIONS FROM THE DIMENSIONS AND CONDITIONS SHOWN BY THESE DRAWINGS. SHOP DETAILS MUST BE SUBMITTED TO THIS OFFICE FOR REVIEW BEFORE PROCEEDING WITH FABRICATION.

LEWISROSS ASSOCIATES, INC
MEP ENGINEERS
25061 AVENUE STANFORD,
VALENCIA, CA 91355
PHONE: (818) 886-2190 FAX: (818) 886-2131

PROJECT NAME: 23-115
PROJECT NAME: BCHD allcove
PROJECT ADDRESS: -

REV	DESCRIPTION	DATE

allcove
BEACH CITIES HEALTH DISTRICT

100% PRELIMINARY DESIGN SUBMITTAL

PMA PROJECT NO. 23007
DRAWING TITLE:
RISER DIAGRAMS

SCALE: AS SHOWN
DATE: 02/28/2024
DRAWN BY: UK
CHECKED BY: TP
SHEET NO. P-3-0

COPYRIGHT LEWIS ROSS ASSOCIATES

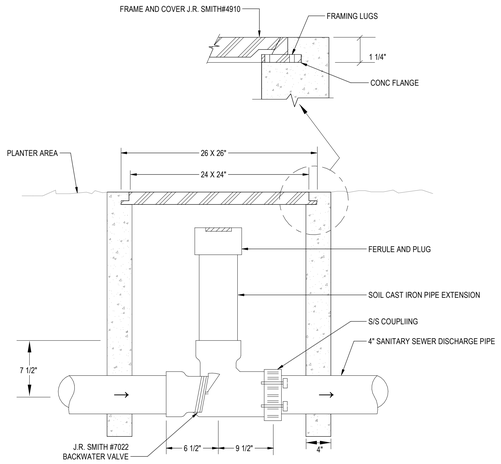

1 BACKWATER VALVE DETAIL
12" = 1'-0"

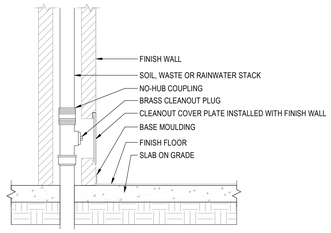

2 CLEANOUT, WALL CONCEALED
12" = 1'-0"

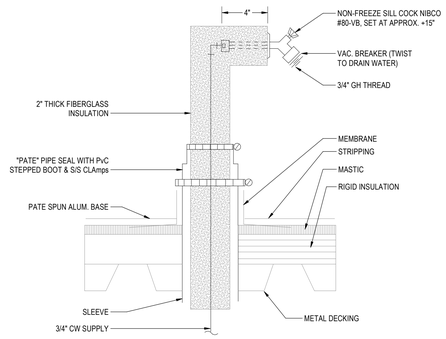

3 HOSE BIB ON ROOF
12" = 1'-0"

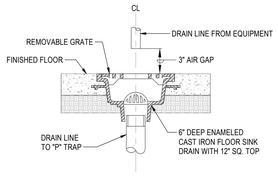

4 FLOOR SINK DRAIN
12" = 1'-0"

Rheem
The new degree of comfort.™

Water | Residential Electric
ProTerra Plug-in Heat Pump
(Shared Circuit) Water Heaters

ProTerra® Plug-in Heat Pump Water Heater with HydroBoost (120V Shared Circuit)

Efficiency
- Up to 3.5 UEF reduces operating cost
- ENERGY STAR® certified
- Title 24 Compliant (JA13 Ready)

Performance
- Delivers hot water more efficiently than most standard electric water heaters
- Ambient operating range: 37-145°F is widest in class, offering more days of HP operation annually; designed to meet Northern Climate Spec (NEEA Tier 2)[1]
- Integrated HydroBoost mixing valve maximizes output performance

Easy Installation
- Easy access side connections
- Factory installed plug-in power cord – plugs directly into a standard wall outlet
- Easily replaces a standard gas water heater

Integration
- Demand Response Ready – Built-in EcoPort (CTA-2045 Port) allows easy connection to Utility programs
- LED Screen with built-in water sensor alert with audible alarm[1]
- Integrated EcoNet® WiFi-connected[2] technology and free mobile app gives users control over water heater, allowing for customizable temperature, vacation settings, scheduling, energy savings and system monitoring at home or away
- LeakGuard™ and LeakSense™ Ready — Easily add leak detection and prevention with leak sensor and shutoff valve upgrade kit

Operation Modes
- Heat Pump
- Vacation/Away: 2-28 days (or placed on hold indefinitely)

Plus…
- Premium grade anode rod extends the life of the tank
- 3/4" NPT water inlet and outlet; 3/4" condensate drain connections
- Easy access, top mounted washable air filter
- 2" Non-CFC foam insulation
- Enhanced flow brass drain valve
- Temperature and pressure relief valve installed
- Design certified to NSF/ANSI 372 (Lead Content)

Warranty
- 10-Year limited tank and parts warranty
  See Residential Warranty Certificate for complete information

Units meet or exceed ANSI requirements and have been tested according to D.O.E. procedures. Units meet or exceed the energy efficiency requirements of NAECA, ASHRAE standard 90, ICC Code and all state energy efficiency performance criteria.

[1]Available with select models. [2]WiFi broadband internet connection required.

ProTerra Plug-in Heat Pump with HydroBoost (120V Shared Circuit)
40, 50, 65 and 80-Gallon Capacities
120 Volt / 1 PH
Electric

These products meet a stringent set of our internally defined sustainability standards.

LEED Points = 3

See specifications chart on next page.

INTEGRATED HOME COMFORT

12/22 FORM NO. RH-PHP-SC Rev. 1

ProTerra Plug-in Heat Pump with HydroBoost (120V Shared Circuit) Specifications

DESCRIPTION					ENERGY INFO		FEATURES			TANK DIMENSIONS (SEE SPACE REQUIREMENTS IN DIAGRAMS BELOW)			
NOMINAL GALLON CAPACITY	RATED GALLON CAPACITY	MODEL NUMBER	MODEL VARIANT	ELECTRIC BREAKER SIZE (TIME DELAY)	UNIFORM ENERGY FACTOR (UEF)	COMPRESSOR STUTS	FIRST HR. RATING (GALLONS)	RECOVERY IN G.P.H 90° F RISE	HEIGHT A	DIAM. B	UNIT WT. (LBS)	APPROX. SHIP WT. (LBS)
40	36	PROPH40 T0 RH120-M	701460	15	2.8	4200	45	12	63"	20-1/4"	157	194
50	46	PROPH50 T0 RH120-M	701463	15	3.0	4200	55	12	62"	22-1/4"	178	218
65	59	PROPH65 T0 RH120-M	700950	15	3.3	4200	55	12	60"	24-1/4"	225	262
80	72	PROPH80 T0 RH120-M	700951	15	3.5	4200	72	12	75"	24-1/4"	244	281

Uniform Energy Factor and rated gallon capacity based on Department of Energy (DOE) requirements.
All units have integrated WiFi control board.

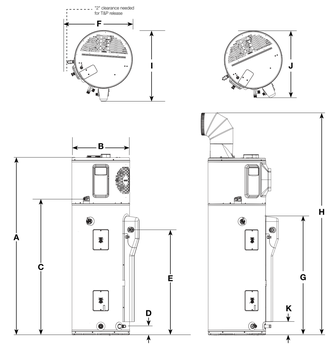

DESCRIPTION		DIMENSIONS (SHOWN IN INCHES)										
NOMINAL GALLON CAPACITY	MODEL NUMBER	A	B	C	D	E	F	G	H	I	J	K
40	PROPH40 T0 RH120-M	62-5/16	20-1/4	47	3-5/8	39-5/8	25-3/8	41-7/8	78-7/8	25	23-1/4	4-11/16
50	PROPH50 T0 RH120-M	61-3/4	22-1/4	47	3-5/8	39-5/8	27-3/8	41-1/2	78-5/8	27-3/8	25-9/16	4-5/16
65	PROPH65 T0 RH120-M	64-3/16	24-1/4	49	3-7/8	42-3/8	29-1/2	44-1-16	81-1/8	29	28-1/16	5
80	PROPH80 T0 RH120-M	74-3/16	24-1/4	59	3-7/8	42-3/8	29-1/2	54-5-16	91	29	27-3/8	5-1/16

Plug-in Heat Pump with HydroBoost Water Heater Installation Guidelines to Provide Optimal Efficiency

Heater: Not Ducted
Room size: Larger than 700 ft³ (e.g. 7' x 10' x 10').
Requirements:
No additional ventilation needed

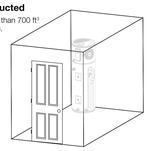

Heater: Not Ducted
Room size: Smaller than 700 ft³ (e.g. 7' x 10' x 10').
Requirements:
Full louvered door OR two louvers top and bottom See to right.

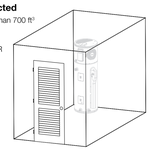

Heater: Ducted With Inlet or Outlet Duct
Room size:
Any size room
Requirements: Air gap under door equal to 18 in² (0.75" clearance)

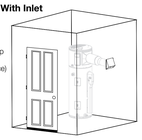

Heater: Ducted With Inlet and Outlet Duct
Room size:
Any size room
Requirements:
No additional ventilation needed

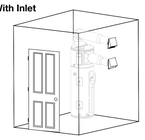

Notice
If air temperature in installed location drops more than 15°F (8°C) during heating, air circulation is insufficient for efficient operation. Utilize ducting to direct cold exhaust air to another location

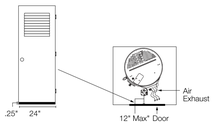

Heater: Not Ducted
Room size: Small Closet
Requirements:
- Air gap under door equals to 18 in² (0.75" clearance).
- Louver must be located the same height on door as the air exhaust on heater.
- Heater air exhaust must be positioned towards louver within one foot of door.

MINIMUM CLEARANCES (WITHOUT DUCTING)		
REAR	SIDES	TOP
0"	0"	6"

For optimal operation, installation in gray US map zone is recommended. When choosing the proper water heater, consult your local plumbing contractor.

Rheem
The new degree of comfort.™

Water | Residential Electric
ProTerra Plug-in Heat Pump
(Shared Circuit) Water Heaters

Plug-in Heat Pump with HydroBoost Service Parts and Accessories List

PART NUMBER	DESCRIPTION	USE FOR
AP19134	Leak Sensor	Automatic detection of internal and external leaks
AP20180	Shutoff Valve	Automatic shut off of water supply to unit
AP21365	Inlet Duct Adapter	Allows for ducting to be connected on the top inlet
AP17829	Outlet Duct Adapter	Allows for ducting to be connected to the unit
SP20882	Earthquake Isolation Kit	Installations in seismic regions
SP20883	Vibration Isolation Kit	Installation on non-concrete floors
SP20884	8" Diameter UL Certified Termination Kit	Termination to the outside or to the attic with 8" diameter
SP20885	7" Diameter UL Certified Termination Kit	Termination to the outside or to the attic with 7" diameter
SP20886	6" Diameter UL Certified Termination Kit	Termination to the outside or to the attic with 6" diameter
SP20887	5" Diameter UL Certified Termination Kit	Termination to the outside or to the attic with 5" diameter
SP20888	8" Rheem Approved Damper Kit	Exhaust only to the outside ducting configuration (no inlet duct)
SP21105	Inlet 25' Flexible 8" Diameter Duct Kit	For up to 25' of ducting
SP17829	Outlet 25' Flexible 8" Diameter Duct Kit	For up to 25' of ducting
SP20890	Rigid Elbow Duct Kit	Installation in tight places where space needs to be minimized
SP21111	Leak Sensor & Shutoff Valve Kit	Upgrade models to protect home from water damage with leak detection and auto shutoff valve

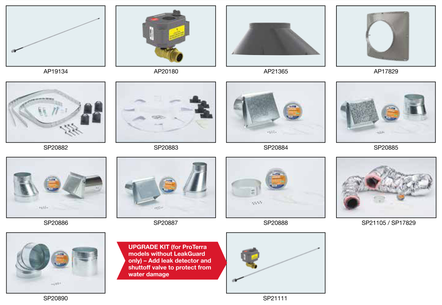

In keeping with its policy of continuous progress and product improvement, Rheem reserves the right to make changes without notice.

Rheem Water Heating • 1115 Northmeadow Parkway, Suite 100
Roswell, Georgia 30076 • www.rheem.com

INTEGRATED HOME COMFORT

12/22 FORM NO. RH-PHP-SC Rev. 1

5 WATER HEATER SPEC SHEET
12" = 1'-0"

PAUL MURDOCH ARCHITECTS
6310 SAN VICENTE BLVD. SUITE 400
LOS ANGELES, CA 90048
T. 310 358-0993

THE DRAWINGS AND SPECIFICATIONS AND IDEAS, DESIGNS, AND ARRANGEMENTS REPRESENTED THEREBY ARE AND SHALL REMAIN THE PROPERTY OF THE ARCHITECT, AND NO PART THEREOF SHALL BE COPIED, DISCLOSED TO OTHERS, OR USED IN CONNECTION WITH ANY WORK OR PROJECT OTHER THAN THE SPECIFIC PROJECT FOR WHICH THEY HAVE BEEN PREPARED AND DEVELOPED WITHOUT THE WRITTEN CONSENT OF THE ARCHITECT. VISUAL CONTACT WITH THESE DRAWINGS OR SPECIFICATIONS SHALL CONSTITUTE CONCLUSIVE EVIDENCE OF ACCEPTANCE OF THESE RESTRICTIONS. WRITTEN DIMENSIONS ON THESE DRAWINGS SHALL HAVE PRECEDENCE OVER SCALED DIMENSIONS. CONTRACTORS SHALL VERIFY AND BE RESPONSIBLE FOR ALL DIMENSIONS AND CONDITIONS ON THE JOB AND THIS OFFICE MUST BE NOTIFIED OF ANY VARIATIONS FROM THE DIMENSIONS AND CONDITIONS SHOWN BY THESE DRAWINGS. SHOP DETAILS MUST BE SUBMITTED TO THIS OFFICE FOR REVIEW BEFORE PROCEEDING WITH FABRICATION.

LEWISROSS ASSOCIATES, INC
MEP ENGINEERS
25061 AVENUE STANFORD,
VALENCIA, CA 91355
PHONE: (818) 886-2190 FAX: (818) 886-2131

PROJECT NAME: 23-115
PROJECT NAME: BCHD allcove
PROJECT ADDRESS: -

REV	DESCRIPTION	DATE

allcove
BEACH CITIES HEALTH DISTRICT

100% PRELIMINARY DESIGN SUBMITTAL

PMA PROJECT NO. 23007
DRAWING TITLE:
PLUMBING DETAILS

SCALE: AS SHOWN
DATE: 02/28/2024
DRAWN BY: UK
CHECKED BY: TP

SHEET NO. P-5.0

COPYRIGHT LEWIS ROSS ASSOCIATES

KEYNOTES PLUMBING

(#) NOTE

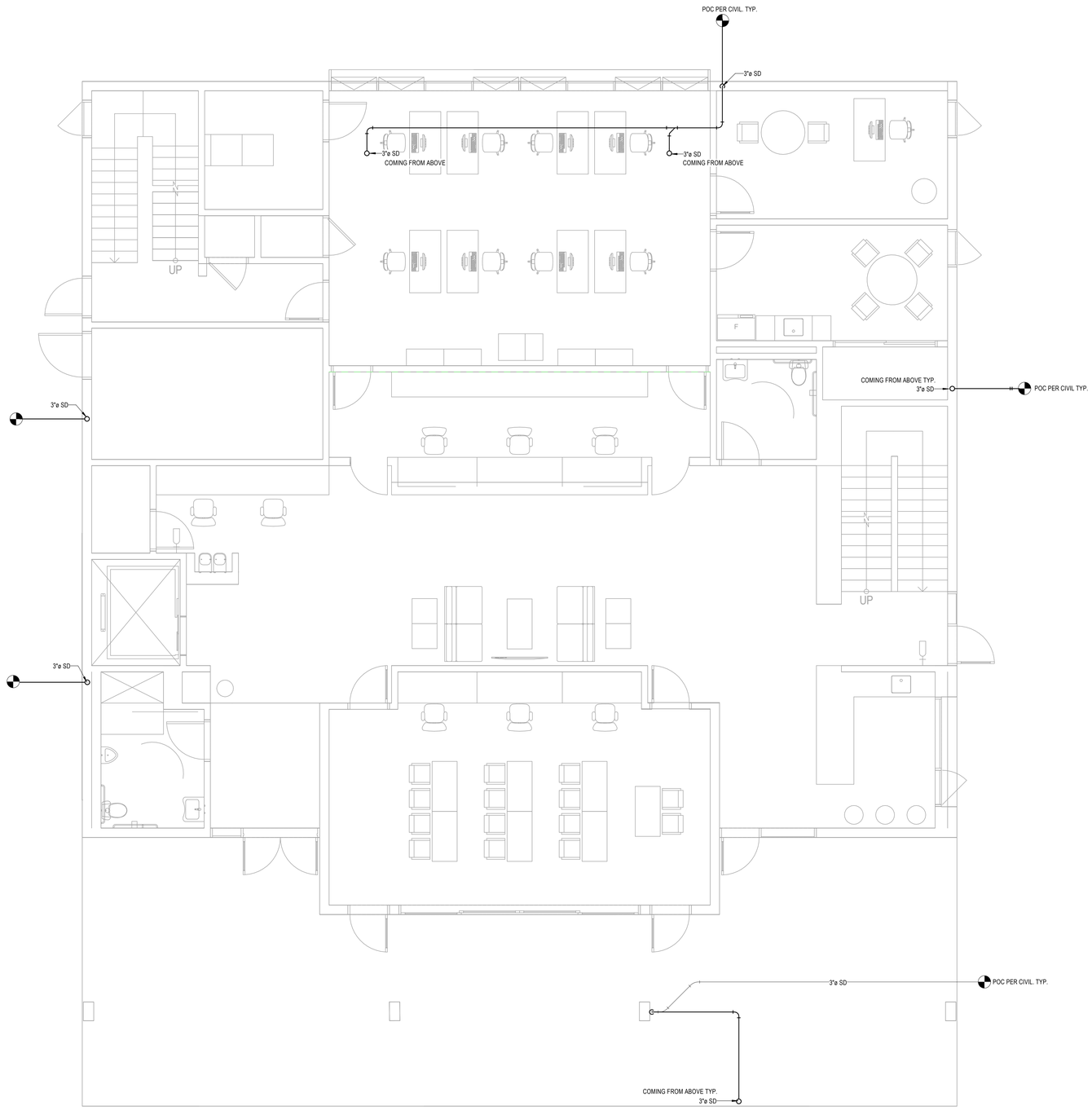

1 **1ST FLOOR STORM WATER PLAN**
1/4" = 1'-0"

PAUL MURDOCH ARCHITECTS
6310 SAN VICENTE BLVD. SUITE 400
LOS ANGELES, CA 90048
T. 310 358-0993

THE DRAWINGS AND SPECIFICATIONS AND IDEAS, DESIGNS, AND ARRANGEMENTS REPRESENTED THEREBY ARE AND SHALL REMAIN THE PROPERTY OF THE ARCHITECT, AND NO PART THEREOF SHALL BE COPIED, DISCLOSED TO OTHERS, OR USED IN CONNECTION WITH ANY WORK OR PROJECT OTHER THAN THE SPECIFIC PROJECT FOR WHICH THEY HAVE BEEN PREPARED AND DEVELOPED WITHOUT THE WRITTEN CONSENT OF THE ARCHITECT. VISUAL CONTACT WITH THESE DRAWINGS OR SPECIFICATIONS SHALL CONSTITUTE CONCLUSIVE EVIDENCE OF ACCEPTANCE OF THESE RESTRICTIONS. WRITTEN DIMENSIONS ON THESE DRAWINGS SHALL HAVE PRECEDENCE OVER SCALED DIMENSIONS. CONTRACTORS SHALL VERIFY AND BE RESPONSIBLE FOR ALL DIMENSIONS AND CONDITIONS ON THE JOB AND THIS OFFICE MUST BE NOTIFIED OF ANY VARIATIONS FROM THE DIMENSIONS AND CONDITIONS SHOWN BY THESE DRAWINGS. SHOP DETAILS MUST BE SUBMITTED TO THIS OFFICE FOR REVIEW BEFORE PROCEEDING WITH FABRICATION.

LEWISROSS ASSOCIATES, INC
MEP ENGINEERS
25061 AVENUE STANFORD,
VALENCIA, CA 91355
PHONE: (818) 886-2190 FAX: (818) 886-2131

PROJECT NAME: 23-115
PROJECT NAME: BCHD allcove
PROJECT ADDRESS: -

REV	DESCRIPTION	DATE

allcove
BEACH CITIES HEALTH DISTRICT

100% PRELIMINARY DESIGN SUBMITTAL

PMA PROJECT NO. 23007
DRAWING TITLE:
FIRST FLOOR STORM WATER DRAINAGE PLAN

SCALE: AS SHOWN
DATE: 02/28/2024
DRAWN BY: UK
CHECKED BY: TP

SHEET NO. **PS-1.0**

COPYRIGHT LEWIS ROSS ASSOCIATES

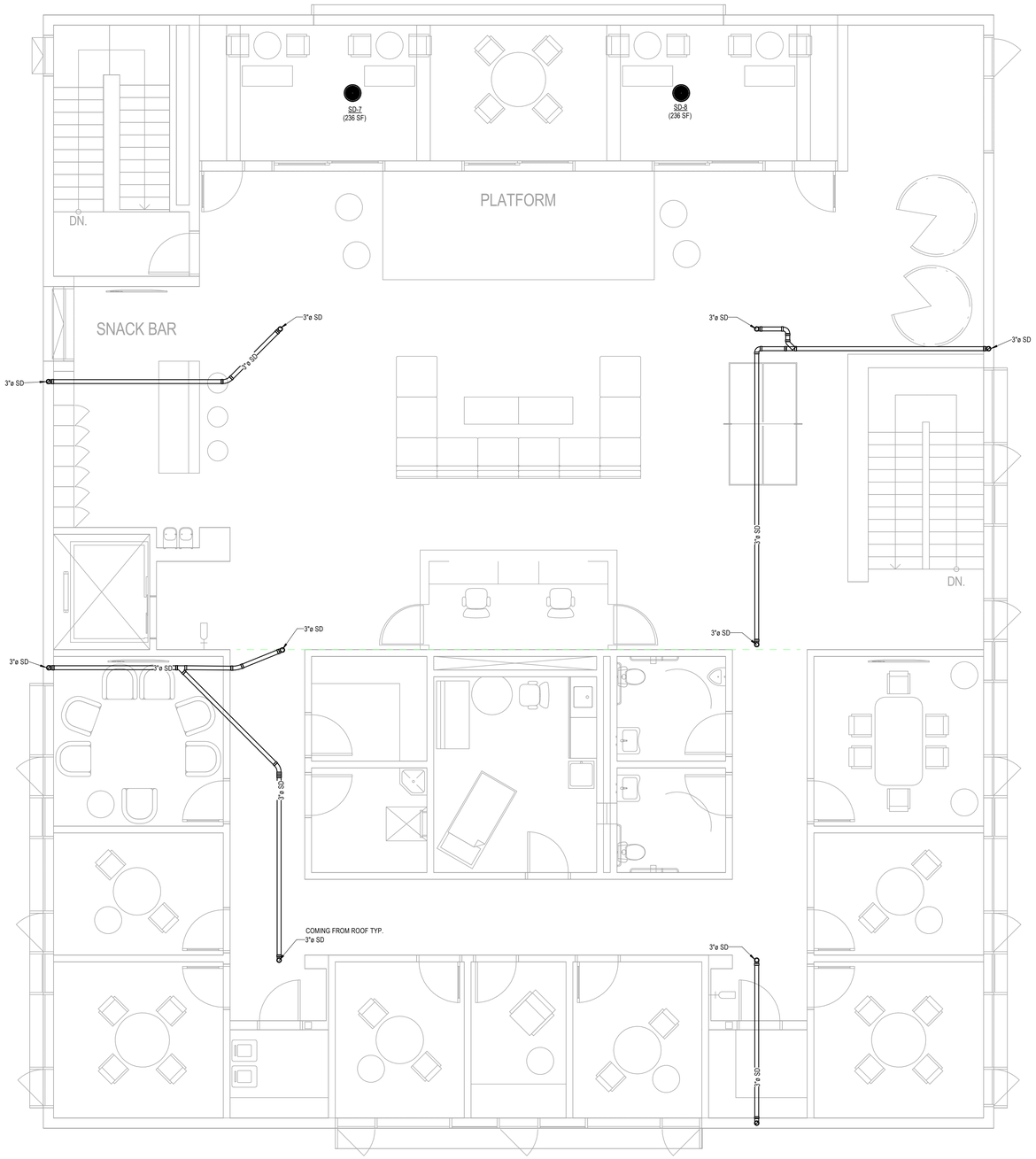

1 **2ND FLOOR STORM WATER PLAN**
1/4" = 1'-0"

PAUL MURDOCH ARCHITECTS
6310 SAN VICENTE BLVD. SUITE 400
LOS ANGELES, CA 90048
T. 310 358-0993

THE DRAWINGS AND SPECIFICATIONS AND IDEAS, DESIGNS, AND ARRANGEMENTS REPRESENTED THEREBY ARE AND SHALL REMAIN THE PROPERTY OF THE ARCHITECT, AND NO PART THEREOF SHALL BE COPIED, DISCLOSED TO OTHERS, OR USED IN CONNECTION WITH ANY WORK OR PROJECT OTHER THAN THE SPECIFIC PROJECT FOR WHICH THEY HAVE BEEN PREPARED AND DEVELOPED WITHOUT THE WRITTEN CONSENT OF THE ARCHITECT. VISUAL CONTACT WITH THESE DRAWINGS OR SPECIFICATIONS SHALL CONSTITUTE CONCLUSIVE EVIDENCE OF ACCEPTANCE OF THESE RESTRICTIONS. WRITTEN DIMENSIONS ON THESE DRAWINGS SHALL HAVE PRECEDENCE OVER SCALED DIMENSIONS. CONTRACTORS SHALL VERIFY AND BE RESPONSIBLE FOR ALL DIMENSIONS AND CONDITIONS ON THE JOB AND THIS OFFICE MUST BE NOTIFIED OF ANY VARIATIONS FROM THE DIMENSIONS AND CONDITIONS SHOWN BY THESE DRAWINGS. SHOP DETAILS MUST BE SUBMITTED TO THIS OFFICE FOR REVIEW BEFORE PROCEEDING WITH FABRICATION.

LEWISROSS ASSOCIATES, INC
MEP ENGINEERS
25061 AVENUE STANFORD,
VALENCIA, CA 91355
PHONE: (818) 886-2190 FAX: (818) 886-2131

PROJECT NAME: 23-115
PROJECT NAME: BCHD allcove
PROJECT ADDRESS: -

REV	DESCRIPTION	DATE

allcove
BEACH CITIES HEALTH DISTRICT

100% PRELIMINARY DESIGN SUBMITTAL

PMA PROJECT NO. 23007
DRAWING TITLE:
SECOND FLOOR STORM WATER DRAINAGE PLAN

SCALE: AS SHOWN
DATE: 02/28/2024
DRAWN BY: UK
CHECKED BY: TP
SHEET NO. PS-1.1

COPYRIGHT LEWIS ROSS ASSOCIATES

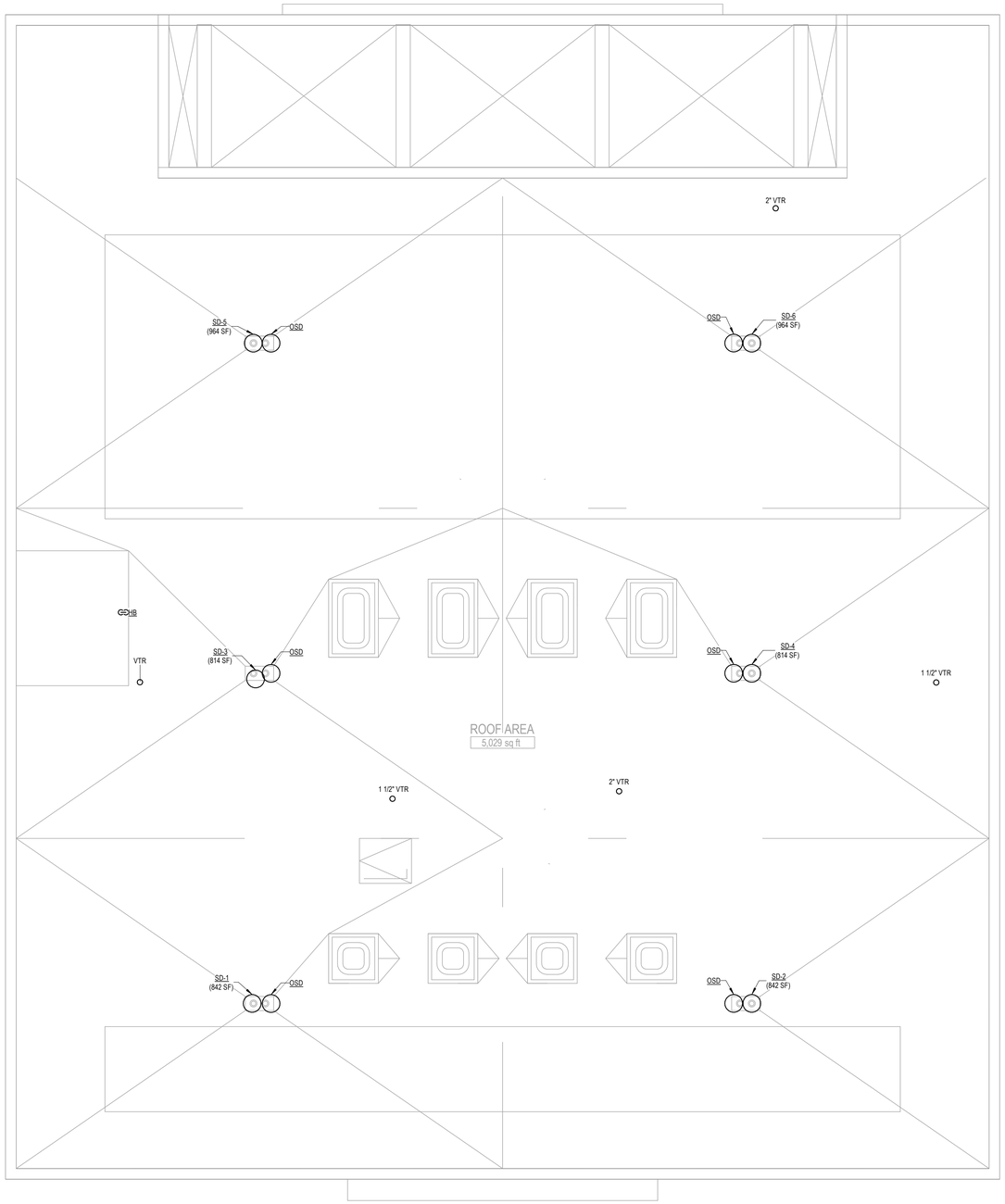

1 **ROOF STORM WATER PLAN**
1/4" = 1'-0"

PAUL MURDOCH ARCHITECTS
6310 SAN VICENTE BLVD. SUITE 400
LOS ANGELES, CA 90048
T. 310 358-0993

THE DRAWINGS AND SPECIFICATIONS AND IDEAS, DESIGNS, AND ARRANGEMENTS REPRESENTED THEREBY ARE AND SHALL REMAIN THE PROPERTY OF THE ARCHITECT, AND NO PART THEREOF SHALL BE COPIED, DISCLOSED TO OTHERS, OR USED IN CONNECTION WITH ANY WORK OR PROJECT OTHER THAN THE SPECIFIC PROJECT FOR WHICH THEY HAVE BEEN PREPARED AND DEVELOPED WITHOUT THE WRITTEN CONSENT OF THE ARCHITECT. VISUAL CONTACT WITH THESE DRAWINGS OR SPECIFICATIONS SHALL CONSTITUTE CONCLUSIVE EVIDENCE OF ACCEPTANCE OF THESE RESTRICTIONS. WRITTEN DIMENSIONS ON THESE DRAWINGS SHALL HAVE PRECEDENCE OVER SCALED DIMENSIONS. CONTRACTORS SHALL VERIFY AND BE RESPONSIBLE FOR ALL DIMENSIONS AND CONDITIONS ON THE JOB AND THIS OFFICE MUST BE NOTIFIED OF ANY VARIATIONS FROM THE DIMENSIONS AND CONDITIONS SHOWN BY THESE DRAWINGS. SHOP DETAILS MUST BE SUBMITTED TO THIS OFFICE FOR REVIEW BEFORE PROCEEDING WITH FABRICATION.

LEWISROSS ASSOCIATES, INC
MEP ENGINEERS
25061 AVENUE STANFORD,
VALENCIA, CA 91355
PHONE: (818) 886-2190 FAX: (818) 886-2131

PROJECT NAME: 23-115
PROJECT NAME: BCHD allcove
PROJECT ADDRESS: -

REV	DESCRIPTION	DATE

allcove
BEACH CITIES HEALTH DISTRICT

100% PRELIMINARY DESIGN SUBMITTAL

PMA PROJECT NO. 23007
DRAWING TITLE:
ROOF STORM WATER PLAN

SCALE: AS SHOWN
DATE: 02/28/2024
DRAWN BY: UK
CHECKED BY: TP

SHEET NO. **PS-1.2**

COPYRIGHT LEWIS ROSS ASSOCIATES

GENERAL NOTES

A. GENERAL

1. SCOPE
THE DRAWINGS AND THESE GENERAL NOTES DESCRIBE THE SCOPE OF WORK AND SYSTEMS. THE MATERIAL REQUIRED FOR THE WORK SHALL BE CONTRACTOR FURNISHED AND CONTRACTOR INSTALLED, UNLESS SPECIFICALLY NOTED OTHERWISE. THE WORK INCLUDES BUT IS NOT LIMITED TO THE FOLLOWING PRINCIPAL SYSTEMS AND EQUIPMENT. ALL ITEMS NOTED ON THE PLAN WHICH ARE NOT EXPLICITLY STATED AS EXISTING SHALL BE NEW.

2. PERMITS AND CHARGES
OBTAIN AND PAY FOR ALL NECESSARY CONSTRUCTION PERMITS, INSPECTION FEES, AND OTHER CHARGES BY AGENCIES HAVING JURISDICTION.

3. REGULATIONS AND CODES
PROVIDE AND INSTALL ALL MATERIALS IN CONFORMANCE WITH THE 2022 C.E.C., CALIFORNIA ADMINISTRATIVE CODE TITLE 8, AND OTHER CODES AND REGULATIONS HAVING JURISDICTION. INSTALL ALL EQUIPMENT IN ACCORDANCE WITH THE REQUIREMENTS OF THE INSPECTING AUTHORITY AND THE MANUFACTURERS RECOMMENDATIONS.

4. VERIFYING EXISTING CONDITIONS
BEFORE SUBMITTING BID, BECOME THOROUGHLY FAMILIAR WITH ACTUAL EXISTING CONDITIONS AT THE BUILDING. THE INTENT OF THE WORK IS SHOWN ON THE DRAWINGS AND DESCRIBED HEREINAFTER. BY THE ACT OF SUBMITTING A BID PROPOSAL FOR THE WORK, THE CONTRACTOR SHALL BE DEEMED TO HAVE MADE SUCH STUDY AND EXAMINATION AND TO ACCEPT ALL CONDITIONS PRESENT AT THE SITE. NO REQUEST FOR ADDITIONAL PAYMENT WILL BE CONSIDERED AS VALID, DUE TO FAILURE TO ALLOW FOR CONDITIONS WHICH MAY EXIST.

5. COORDINATION
COORDINATE ALL WORK WITH OTHER TRADES. OBTAIN ALL DRAWINGS THAT WILL REQUIRE COORDINATION AND PROVIDE ALL ELECTRICAL CONNECTION REQUIRED WHETHER SHOWN ON ELECTRICAL DRAWINGS OR NOT. ELECTRICAL EQUIPMENT LOCATIONS INDICATED ARE SHOWN DIAGRAMMATICALLY, EXACT LOCATION SHALL BE VERIFIED. SCALING OFF OF DRAWINGS SHALL BE DONE AT CONTRACTORS RISK. DO NOT SCALE DEVICES, LIGHTING FIXTURES OR ANY EQUIPMENT FROM PLANS. LIGHTING FIXTURE QUANTITIES AND LENGTHS SHALL BE CONTRACTORS RESPONSIBILITY. FIXTURES ARE SHOWN FOR CIRCUITING ONLY. CONTRACTOR TO VERIFY SIZES & QUANTITIES PRIOR TO BID.

6. SERVICE CONTINUITY
UNINTERRUPTED EXISTING ELECTRICAL POWER SHALL BE MAINTAINED TO OTHER TRADES FOR TEMPORARY POWER AREAS OF THE SITE DURING CONSTRUCTION. PROVIDE ANY TEMPORARY SERVICES AS MAY BE REQUIRED. IDENTIFY AT BID TIME, ALL WORK TO BE DONE ON PREMIUM TIME AND THE TOTAL OVERTIME MAN-HOURS REQUIRED FOR COMPLETION.

7. AS BUILT
PROVIDE RECORD DRAWINGS IN ACAD TO THE OWNER WITH ALL CHANGES NOTED THEREON AT THE COMPLETION OF THE PROJECT. RECORD DRAWINGS SHALL BE SIGNED AND DATED BY CONTRACTOR PRIOR TO RELEASE OF FINAL RETENTION OF ALL MONIES.

8. GUARANTEE
CONTRACTOR SHALL UNCONDITIONALLY GUARANTEE ALL LABOR AND MATERIALS ON ALL WORK AGAINST DEFECTS IN WORKMANSHIP AND MATERIALS FOR A PERIOD OF ONE YEAR.

9. SHOP DRAWINGS
SUBMIT SHOP DRAWINGS AND MATERIAL LIST FOR REVIEW PRIOR TO COMMENCING ANY WORK. ALL EQUIPMENT TO BEAR U.L. LABEL OR THAT OF ANOTHER ACCEPTABLE TESTING LABORATORY. SHOP DRAWINGS MUST BE STAMPED BY THE CONTRACTOR FOR CONFORMANCE PRIOR TO SUBMITTAL. SUBMIT THREE HARD COPY SETS OF SHOP DRAWINGS FOR REVIEW PRIOR TO PURCHASING ALL BREAKER MOUNTING HARDWARE, DISCONNECT SWITCHES, FUSES, CONTROLLERS, LIGHTING FIXTURES, LIGHT SWITCHES, RECEPTACLES, ETC.

10. CONTRACTOR BID
CONTRACTOR'S BID SHALL BE BASED ON ALL WORK SHOWN ON THE PLANS AND AS SPECIFIED. IF CONTRACTOR PROPOSES TO SUBSTITUTE FOR EQUIPMENT SPECIFIED, HE SHALL SUBMIT HIS REQUEST FOR CONSIDERATION OF THE OWNER AND ENGINEER PRIOR TO BID IN WRITING. ALL SUBSTITUTIONS MUST BE REVIEWED BY THE ENGINEER IN WRITING. SUCH REVIEW SHALL NOT RELIEVE THE CONTRACTOR COMPLYING WITH THE REQUIREMENTS OF THE DRAWINGS AND SPECIFICATIONS, AND THE CONTRACTOR SHALL BE RESPONSIBLE AT HIS OWN EXPENSE FOR ANY CHARGES RESULTING FROM HIS PROPOSED SUBSTITUTIONS WHICH AFFECT OTHER PARTS OF HIS OWN WORK, THE OWNER, ENGINEER OF RECORD OR THE WORK OF OTHER CONTRACTORS.

B. MATERIAL AND INSTALLATION
ALL WORK AND MATERIAL SHALL CONFORM TO THE LATEST RULES OF THE GOVERNING ELECTRICAL CODE AND INSTALLATION SHALL BE OF THE LATEST INDUSTRY STANDARDS OF WORKMANSHIP.

ALL INSTALLED MATERIALS AND EQUIPMENT SHALL BE LISTED U.L., NRTL OR LISTED AND APPROVED BY AN APPROVED TESTING LABORATORY.

1. CONDUITS
CONDUIT SHALL BE EMT, PVC, IMC, RIGID OR FLEXIBLE STEEL TYPE. CONDUIT SHALL BE MANUFACTURED IN ACCORDANCE WITH UL-1. A GROUND WIRE IS REQUIRED IN ALL FLEXIBLE CONDUIT AND UNDERGROUND CONDUIT. BUSHINGS SHALL BE INSTALLED ON ALL COMMUNICATION, TELEPHONE & SPEAKER CONDUITS. PROVIDE 3/16" NYLON PULL STRING IN ALL EMPTY CONDUITS. ALL EMT CONNECTIONS SHALL BE COMPRESSION & NOT SCREW TYPE.

2. SWITCHES AND RECEPTACLES
PROVIDE 20AMP NEMA RATED SWITCHES AND RECEPTACLES OF SPECIFICATION GRADE. ALL SWITCHES SHALL BE RATED FOR 120 AND/OR 277 VOLT AND RECEPTACLES SHALL BE NEMA 5-20R. IN ALL OFFICES AND OFFICE AREAS DEVICES SHALL BE DECORA NOVA SERIES TYPE WITH COLOR SELECTION BY ARCHITECT/OWNERS REPRESENTATIVE.

3. FEEDERS AND BRANCH CIRCUITS IDENTIFICATION
IDENTIFY FEEDERS WITH THE CORRESPONDING CIRCUIT DESIGNATION AT THE OVER-CURRENT DEVICE, LOAD END, AND IN PULL BOXES WITH E-Z CODE OR OTHER APPROVED WIRE MARKER. IDENTIFY BRANCH CIRCUITS WITH I.D. MARKERS, THE CORRESPONDING CIRCUIT DESIGNATION AT THE OVER-CURRENT DEVICE, AT ALL SPLICES, IN JUNCTION BOXES, AND IN OUTLETS. USE PLASTIC COATED SELF-STICKING MARKERS SUCH AS THOMAS & BETTS E-Z CODE FOR IDENTIFICATION OF CONDUCTORS. IDENTIFY SIGNAL & COMMUNICATION CABLES AT TERMINAL AND OUTLET UNIQUELY WITH PERMANENT LABELING.

4. CONDUCTORS
DELIVER ALL CONDUCTORS TO THE JOB SITE IN ORIGINAL UNBROKEN CARTON OR REEL, PROPERLY TAGGED WITH U.L. LABEL, SIZE, TYPE, MANUFACTURER, TRADE NAME AND THE DATE OF MANUFACTURE. (MUST BE MANUFACTURED WITHIN 6 MONTHS) PROVIDE COPPER CONDUCTORS #12 AWG MINIMUM UNLESS SPECIFICALLY NOTED OTHERWISE ON THE DRAWINGS. PROVIDE STRANDED COPPER CONDUCTORS FOR ALL WIRING. USE CONDUCTORS WITH 90°C THHN/THWN 600 VOLTS INSULATION, UNLESS OTHERWISE NOTED. CONDUCTOR SIZE NO.1 AWG AND SMALLER WITH 90 DEGREE C INSULATION ARE TO USE THE 60 DEGREE COLUMN OF THE CODE, TABLE 310-16, TO DETERMINE AMPACITY. CONDUCTORS #1/0 AWG AND LARGER WITH 75 DEGREE AND 90 DEGREE INSULATION ARE TO USE THE 75 DEGREE COLUMN OF CODE, TABLE 310-16, TO DETERMINE AMPACITY. (110.14C) WHERE THE NUMBER OF CONDUCTORS IN A RACEWAY OR CABLE EXCEEDS THREE, THE ALLOWABLE AMPACITY OF EACH CONDUCTOR SHALL BE REDUCED PER TABLE 310.15(B)(3)(a).

5. LIGHTING FIXTURES
PROVIDE LIGHTING FIXTURES WITH ELECTRONIC DRIVERS PER SCHEDULE. NO SUBSTITUTIONS OF FIXTURES SHALL BE PROVIDED WITHOUT THE APPROVAL OF THE ENGINEER -OF-RECORD.

6. PANELBOARDS/SWITCHBOARD (BID SQUARE D; PROVIDE GE ALTERNATE BID)
DISTRIBUTION AND LIGHTING PANELBOARDS WITHIN PROJECT AREA SHALL BE OF THE COPPER BUS THREE PHASE, FOUR WIRE DISTRIBUTED PHASING TYPE. CIRCUITING SHALL BE ARRANGED TO PROVIDE, AS NEARLY AS POSSIBLE, AN EVENLY BALANCED LOAD ON ALL PHASES. PANELBOARDS SHALL BE BOLT-ON CIRCUIT BREAKER TYPE. AVAILABLE FAULT CURRENT IS STATED ON PANELBOARD SCHEDULE. PROVIDE PANEL IDENTIFICATION NAMEPLATE (ENGRAVED ON-ADHESIVE 1/2" MINIMUM LETTERS) AND TYPEWRITTEN LIST OF CIRCUITS IN THE DIRECTORY FRAME. PROVIDE HINGED PANEL COVERS.

7. STRUCTURAL SUPPORT
EACH SECTION OF FLOOR MOUNTED SWITCHBOARD, DISTRIBUTION BOARD, ETC. SHALL BE BOLTED TO THE CONCRETE HOUSEKEEPING PAD USING (6) 3/4"-10 GRADE 2 BOLTS AND CONICAL WASHERS TORQUED TO 70LB-FT. PROVIDE MINIMUM 4000 PSI STRENGTH CONCRETE BELOW ALL FLOOR MOUNTED ELECTRICAL EQUIPMENT. TIE THE TOP OF ALL FLOOR MOUNTED ELECTRICAL EQUIPMENT TO THE BUILDING STRUCTURE IN A SEISMICALLY APPROVED MANNER.

8. ELECTRICAL CERTIFICATION
"ELECTRICIANS" PERFORMING WORK ON THIS PROJECT SHALL BE CURRENTLY CERTIFIED IN ACCORDANCE WITH THE STATE OF CALIFORNIA AB931 AND THE DIVISION OF APPRENTISHIP STANDARDS SECTION 3099.

C. DEMOLITION
1. NOTIFY THE OWNER IMMEDIATELY WHEREVER EXISTING EQUIPMENT IS ENCOUNTERED WHICH MUST BE RELOCATED DUE TO THE NEW CONSTRUCTION, AND WHICH IS NOT INDICATED ON THE PLANS.
2. BEGINNING OF DEMOLITION MEANS CONTRACTOR ACCEPTS EXISTING CONDITIONS.

D. EXECUTION
1. ALL CONDUIT RUNS SHALL BE CONCEALED, UNLESS SHOWN OTHERWISE. PROVIDE A PULL WIRE IN ALL EMPTY CONDUITS.
2. EXISTING CONDITION SHOWN IS FROM AVAILABLE RECORD DRAWINGS AND VISUAL FIELD SURVEY AND SHOWN FOR REFERENCE ONLY. CONTRACTOR SHALL VERIFY ACTUAL EXISTING CONDITION AT SITE.
3. ALL WORK SHOWN IS NEW UNLESS SPECIALLY INDICATED AS EXISTING (X). ALL ELECTRICAL EQUIPMENT MOUNTING AND ANCHORAGE MUST CONFORM WITH LOCAL AND STATE SEISMIC CODES.

E. NOT USED

F. GROUNDING & BONDING
FURNISH AND INSTALL COMPLETE BONDING AND GROUNDING SYSTEM AS REQUIRED BY CODES. CONTINUITY OF GROUNDING SHALL BE MAINTAINED MECHANICALLY AND ELECTRICALLY THROUGHOUT THE SYSTEM. A GREEN GROUNDING CODE SIZED CONDUCTOR SHALL BE CARRIED IN ALL CONDUITS.

3.

E. TELEPHONE SYSTEMS
PROVIDE RACEWAYS, AND ALL MATERIAL INCLUDING PULLING CABLE IN EACH RACEWAY AS REQUIRED FOR THE TELEPHONE SYSTEM PER THE TELEPHONE REQUIREMENTS. ALL CAT 6E CABLES SHALL BE TESTED & MEET CURRENT BICSI STANDARDS, A TEST REPORT SIGNED BY A RCCD SHALL BE PROVIDED WITH THE DOCUMENTATION.

F. GROUNDING & BONDING
FURNISH AND INSTALL COMPLETE BONDING AND GROUNDING SYSTEM AS REQUIRED BY CODES. CONTINUITY OF GROUNDING SHALL BE MAINTAINED MECHANICALLY AND ELECTRICALLY THROUGHOUT THE SYSTEM. A GREEN GROUNDING CODE SIZED CONDUCTOR SHALL BE CARRIED IN ALL CONDUITS.

G. INSTALLATION
1. IT IS THE INTENT OF THESE PLANS AND SPECIFICATIONS THAT A COMPLETE AND WORKABLE ELECTRICAL INSTALLATION BE PROVIDED FOR ALL THE EQUIPMENT DESCRIBED OR SHOWN AS BEING IN THIS CONTRACT. TOWARD THIS END FURNISH ALL LABOR AND TOOLS NECESSARY AND FURNISH AND INSTALL ALL APPARATUS, MATERIALS AND EQUIPMENT IN A FASHION COMPLYING WITH ALL APPLICABLE CODES, INCLUDING ITEMS REQUIRED BUT NOT NORMALLY SHOWN, SUCH AS LAMPS, COUPLINGS, HANGERS, BRACKETS, CLAMPS, BOXES, CONNECTORS AND HARDWARE. REFER ALSO TO WRITTEN SPECIFICATIONS FOR GENERAL, MECHANICAL AND ELECTRICAL SECTIONS.
2. PROCURE ALL PERMITS FROM LEGALLY CONSTITUTED AUTHORITIES, ARRANGE FOR ALL INSPECTIONS AND PAY ALL COSTS FOR FEES AND TESTS IN CONNECTION THEREWITH. COMPLY WITH CODES: NOTHING IN THESE PLANS AUTHORIZES DEVIATION FROM APPLICABLE CODES.
3. DETERMINE EXACT ROUTING OF CONCEALED FEEDERS AND BRANCH HOMERUNS IN COOPERATION WITH OTHER TRADES TO SIMPLIFY INSTALLATION WHEREVER POSSIBLE BUT SUBJECT TO APPROVAL OF ARCHITECT FOR VISUAL AND STRUCTURAL REASONS.
4. PROVIDE A CODE APPROVED DISCONNECT SWITCH OR BREAKER WITHIN SIGHT OF EVERY MOTOR AND FEED MOTORS NOT EQUIPPED WITH "BUILT IN" PROTECTION THROUGH A MAGNETIC OR MANUAL STARTER WITH OVERLOAD HEATERS SIZED TO COMPLY WITH MOTOR MANUFACTURER'S RECOMMENDATIONS AND APPLICABLE CODES.
5. FOR CONNECTIONS TO EXHAUST FANS, PUMPS, COMPRESSORS, SPACE HEATERS, WATER HEATERS, AQUASTATS, SOLENOID VALVES AND OTHER MECHANICAL EQUIPMENT AND FOR CONDUITS AND WIRE REQUIRED BUT NOT NECESSARILY SHOWN ON THESE DRAWINGS REFER TO MECHANICAL PLANS AND DETERMINE EXACT LOCATIONS UNDER DIRECTION OF HEATING AND VENTILATING CONTRACTOR.
6. DO NOT RUN ANY CONDUIT IN SLAB IF ITS OUTSIDE DIAMETER EXCEEDS 1/3 THE THICKNESS OF THE SLAB. LOCATE CONDUITS WITHIN THE MIDDLE OF THE SLAB. WHERE CONDUITS ARE GROUPED IN PARALLEL RUNS, SPACE THEM 3" OR MORE APART. WHERE CONDUITS CROSS EACH OTHER, THICKEN SLAB PROPORTIONATELY OVER A HORIZONTAL AREA EQUAL TO TEN TIMES THE DIAMETER OF THE LARGEST CONDUIT. REFER ALSO TO DETAILS SHOWN..
7. SIZE OUTLET BOXES IN CONFORMITY WITH CODE FOR NUMBER AND GAUGE OF CONDUCTORS THEREIN, EXCEPT WHERE NOTED TO BE LARGER. MINIMUM BOX SIZE SHALL BE 4" SQUARE BY 1-1/2" DEEP.
8. ALL ELECTRICAL WORK SHALL BE INSTALLED SO AS TO BE READILY ACCESSIBLE FOR OPERATING, SERVICING, MAINTAINING AND REPAIRING. ALL CONDUIT SHALL BE CONCEALED WHERE POSSIBLE. EXPOSED CONDUIT SHALL BE IN STRAIGHT LINES PARALLEL WITH, OR AT RIGHT ANGLES TO, COLUMN LINES OR BEAMS AND SEPARATED BY AT LEAST THREE (3) INCHES FROM WATER LINES WHENEVER THEY RUN LONG SIDE OR ACROSS SUCH LINES. CONDUIT SHALL NOT BE RUN BELOW CABLE TRAYS OR LIGHT FIXTURES WITHOUT SPECIFIC APPROVAL OF THE OWNERS REPRESENTATIVE. HANGERS SHALL BE FASTENED TO STEEL, CONCRETE OR MASONRY, BUT NOT TO PIPING. HANGERS AND SUPPORT SYSTEMS ARE AN INTEGRAL PART OF THE VISUAL ENVIRONMENT. ALL HANGERS AND SUPPORTS EXPOSED TO PUBLIC VIEW MUST BE SHOWN IN DETAIL ON PLANS SUBMITTED TO ENGINEER FOR APPROVAL OF APPEARANCE. ALL HANGERS MUST BE UNIFORMLY SPACED AND NEATLY INSTALLED WITH NO EXCESS MATERIAL BEYOND WHAT IS REQUIRED FOR THE SUPPORT FUNCTION. CONTRACTOR SHALL SELECT ACCESSORIES AND HARDWARE WITH A SMOOTH, NEAT FINISHED APPEARANCE AND PAINT ALL EXPOSED CONDUIT HANGERS TO MATCH THE ADJACENT FINISHES.
9. ALL RECEPTACLES SHALL BE MOUNTED AT 18" PER ADA REQUIREMENTS UNLESS NOTED OTHERWISE, MEASURED FROM BOTTOM OF BOX.
10. ALL DISTRIBUTION BOARDS, SWITCHBOARDS AND TRANSFORMERS THAT ARE FLOOR MOUNTED SHALL BE MOUNTED ON 2" THICK HOUSEKEEPING PAD. TRANSFORMER SHALL BE ON VIBRATION ISOLATION PADS AND CONNECTED WITH FLEXIBLE CONDUIT.
11. CONTRACTOR SHALL EXAMINE PLANS AND VERIFY IN FIELD LOCATIONS OF ALL FIRE RATED WALLS, CEILINGS AND FLOORS. CONTRACTOR SHALL SEAL ALL ELECTRICAL SYSTEM PENETRATIONS THROUGH FIRE RATED WALLS, CEILINGS AND FLOORS WITH U.L. LISTED MATERIAL APPROVED BY THE AUTHORITY HAVING JURISDICTION.
12. ALL SWITCHES SHALL BE MOUNTED 36" TO 48" MEASURED FROM BOTTOM & TOP OF BOX RESPECTIVELY.
13. PANEL CIRCUIT DIRECTORY SHALL COMPLY WITH CEC 408.4.
14. PROVIDE 90% COMPACTION OR SAND SLURRY OVER ALL UNDERGROUND CONDUITS, USE ONLY CLEAN FILL.

H. ADDITIONAL NOTES
1. MARKING - UNDERGROUND SYSTEM SHALL BE LEGIBLY MARKED "UNDERGROUND SYSTEM" AT THE SOURCE OR FIRST DISCONNECTING MEANS OF THE SYSTEM. THE MARKING SHALL BE OF SUFFICIENT DURABILITY TO WITHSTAND THE ENVIRONMENT INVOLVED. (250.21)(C)
2. PROVIDE SWITCH AND RECEPTACLE HEIGHTS PER STATE OF CALIFORNIA ACCESSIBLE REQUIREMENTS.
3. THE ISSUANCE OF A PERMIT SHALL NOT PREVENT THE BUILDING OFFICIAL FROM REQUIRING THE CORRECTION OF ERRORS ON THESE PLANS OR FROM PREVENTING ANY VIOLATION OF THE CODES ADOPTED BY THE CITY, RELEVANT LAWS, ORDINANCES, RULES AND/OR REGULATIONS.
4. FOR FIRE RATED WALL/CEILING PENETRATION AND/OR MEMBRANE PENETRATION, COMPLETE NRTL CLASSIFICATION SHEETS SHALL BE PROVIDED TO THE INSPECTOR AT THE TIME OF INSPECTION FOR THE LISTED RATED ASSEMBLY.
5. EACH MULTIWIRE BRANCH CIRCUIT SHALL BE PROVIDED WITH A MEANS THAT WILL SIMULTANEOUSLY DISCONNECT ALL UNGROUNDED CONDUCTORS AT THE PANELBOARD WHERE THE BRANCH CIRCUIT ORIGINATES. (210.4)
6. PROVIDE LOCAL DISCONNECTS FOR ALL HARDWIRED EQUIPMENT THAT IS NOT "WITHIN SIGHT" OF THE SOURCE PANEL.
7. MULTIPLE RACEWAYS CONTAINING MORE THAN 3 CURRENT CARRYING CONDUCTORS SHALL COMPLY WITH [2016 CEC, 310.15(B)(2)(A)].
8. THE IDENTIFICATION OF EVERY CIRCUIT OF A PANEL BOARD AND SWITCHBOARD SHALL BE LEGIBLY IDENTIFIED AS TO ITS CLEAR, EVIDENT, AND SPECIFIC PURPOSE OR USE AND SHALL INCLUDE SUFFICIENT DETAIL TO ALLOW EACH CIRCUIT TO BE DISTINGUISHED FROM ALL OTHERS. 2016 C.E.C 408.4 - PROVIDE MORE DETAIL ON PANEL SCHEDULE CIRCUIT DESCRIPTIONS.
9. A SINGLE RECEPTACLE INSTALLED ON AN INDIVIDUAL BRANCH CIRCUIT SHALL HAVE AN AMPERE RATING OF NOT LESS THAN THAT OF THE BRANCH CIRCUIT. INDICATE THE RECEPTACLE RATING. (210.21(B)(1))
10. PROVIDE RECEPTACLE OUTLETS WHEREVER CORD CONNECTED EQUIPMENT WILL BE USED. (210.50(B))
11. WHERE THE DISCONNECTS ARE NOT PROVIDED WITHIN SIGHT FROM THE EQUIPMENT IT SUPPLIES, THE SWITCH OR CIRCUIT BREAKER MUST INCLUDE PROVISIONS FOR ADDING A LOCK, AND THESE PROVISIONS MUST REMAIN WITH THE EQUIPMENT. THESE LOCKING PROVISIONS HAVE TO BE PART OF THE EQUIPMENT, EITHER INHERENT TO THE EQUIPMENT DESIGN OR AS A ACCESSORY FEATURE THAT CAN BE INSTALLED ON THE EQUIPMENT. [410.141(B), 422.31(B), 424.19, 440.14 EXCEPTION NO. 1, 600.6(A)(2)(3), 620.51(A) EXCEPTION NO. 1, 620.53, 620.55]
12. STANDARD NON-LOCKING STRAIGHT-BLADE RECEPTACLES IN 120- AND 250-VOLT CONFIGURATION AT WET/DAMP LOCATION ARE REQUIRED TO BE LISTED WEATHER-RESISTANT TYPE. [CEC 406.8(A)].

I. FIRE ALARM SYSTEM / PROVIDED BY OTHERS UNDER SEPARATE CONTRACT
1. CONTRACTOR SHALL PROVIDE AND INSTALL A FIRE ALARM SYSTEM FOR THE PROJECT AREA TO INCLUDE:

A) SMOKE DETECTORS IN ALL REQUIRED AREAS
B) HEAT DETECTORS IN ALL REQUIRED AREAS
C) DUCT DETECTORS IN ALL REQUIRED SPACES
D) STROBES/ALARMS IN ALL REQUIRED AREAS
E) PULL STATIONS AT ALL LEGAL FIRE EXITS
F) TAMPER AND FLOW SWITCHES
G) CARBON MONOXIDE DETECTORS

2. CONTRACTOR SHALL SUBMIT FOR THE OWNERS SIGNED APPROVAL, APPROVED FIRE DEPARTMENT FIRE ALARM DRAWINGS FOR THE PROJECT SPACE.
3. CONTRACTOR SHALL BE BUILDING STANDARD.
4. ALL DEVICES AND EQUIPMENT SHALL BE CALIFORNIA STATE FIRE MARSHALL APPROVED AND CURRENTLY LISTED.
5. CONTRACTOR SHALL WARRANTY ALL DEVICES AND SYSTEMS FOR A PERIOD OF TWO YEARS.
6. CONTRACTOR SHALL PROVIDE 2 (TWO) HARD COPY SETS OF FIRE ALARM MANUALS FOR ALL SYSTEMS AND DEVICES IN ADDITION TO 2 (TWO) HARD COPY SETS OF A SYSTEM OPERATIONAL MANUAL TAILORED FOR THE PROJECT SPACE.
7. CONTRACTOR SHALL PROVIDE AN INDIVIDUALLY ADDRESSABLE TOTALLY SUPERVISED SYSTEM WITH BATTERY BACK-UP FOR 24 HOURS OF MONITORING INITIATING CIRCUITS PLUS 30 MINUTES OF ALARM WITH DUAL RATE BATTERY CHARGER.
8. CONTRACTOR SHALL PROVIDE A SATISFACTORY SYSTEM TEST IN THE PRESENCE OF THE OWNER, FIRE PREVENTION BUREAU AND CONSULTING ENGINEER.
9. CONTRACTOR SHALL PROVIDE A CENTRAL MASTER ANNUNCIATOR PANEL IN THE ELECTRICAL ROOM AND A REMOTE PANEL IN AN AREA PER OWNERS REPRESENTATIVE AND LOCAL FIRE MARSHAL.
10. ANNUNCIATOR PANEL SHALL BE NONGRAPHIC WITH NAMEPLATE AND LED FOR EACH DEVICE ADDRESS, WITH AUDIBLE ALARM AND KEYED SILENCE SWITCH AND BE LOCATED IN MANNED AREA.
11. CONTRACTOR SHALL PROVIDE ALL CONNECTION TO POWER PANELS, CONDUIT AND WIRE AND CONNECTIONS REQUIRED TO PROVIDE AN OPERATIONAL FIRE ALARM SYSTEM 7 CONNECTION TO CITY APPROVED MONITORING AREA.
12. UNIQUELY LABEL ALL ADDRESSABLE DEVICES TO MATCH FIRE ALARM PROGRAMMING & AS BUILTS.

SYMBOLS

Symbol	Description
C	RELAY CONTROLLED RECEPTACLE AT 18" AFF TO BOTTOM OF DEVICE, PROVIDE WITHIN 6'-0" OF NON CONTROLLED RECEPTACLE. PROVIDE COVER PLATE WITH ENGRAVED "CONTROLLED".
	DUPLEX RECEPTACLE, WALL MOUNTED @ +18" AFF TO BOTTOM OF DEVICE, NEMA 5-20R U.O.N.
	DOUBLE DUPLEX RECEPTACLE, NEMA 5-20R, WALL MOUNTED @ +18"AFF AT BOTTOM OF DEVICE
	DUPLEX RECEPTACLE, FLOOR MOUNTED, NEMA 5-20R
	CEILING MOUNTED DUPLEX RECEPTACLE, 5-20R
J	JUNCTION BOX (CEILING MTD.) SIZE PER TABLE AND NEC ARTICLE 314
J	JUNCTION BOX (WALL MTD.) SIZE PER TABLE AND NEC ARTICLE 314
T	THERMOSTAT - 36" TO 48" AFF, BOTTOM & TOP OF BOX RESPECTIVELY
T	TRANSFORMER
	BRANCH CIRCUIT PANELBOARD - 120/208VAC, 3Ø, 4W.
	CONDUIT RUN CONCEALED ABOVE CEILING OR IN WALLS,
	CONDUIT RUN CONCEALED BELOW FLOOR OR UNDERGROUND
0-10	LIGHTING CONTROL 0-10V (PURPLE GRAY)
C5	LOW VOLTAGE CABLE & CONDUIT 3/4"C-1#CAT5 U.O.N. (PER nLIGHT REQUIREMENTS)
E	EMERGENCY CIRCUIT
P	POWER CONDUIT & CONDUCTORS
	FLEXIBLE CONDUIT (WITH GROUND CONDUCTOR, PROVIDE LIQUID TIGHT CONDUIT IN ALL EXPOSED AREAS)
#10	HASH MARKS INDICATE QUANTITY OF #12 CONDUCTORS. NO HASH MARKS INDICATE (2)#12AWG. (PROVIDE GROUND CONDUCTOR IN ALL CONDUITS.) WHERE NO NUMBER IS INDICATED, THE CONDUCTORS ARE #12AWG(MIN.) CONDUIT SIZE IS AS REQUIRED BY ELECTRICAL CODE. (3/4" CONDUIT MINIMUM).
2LA 1-3-5,7	INDICATES A HOMERUN TO PNL 2LA, CKTS 1-3-5 WITH SHARED NEUTRAL & CKT 7 WITH DEDICATED NEUTRAL.
	3/4"C-2#12 & 1#12 GND
	3/4"C-3#12 & 1#12 GND
	3/4"C-4#12 & 1#12 GND
	3/4"C-5#12 & 1#12 GND
#10	3/4"C-2#10 & 1#10 GND
#10	3/4"C-3#10 & 1#10 GND
#10	3/4"C-4#10 & 1#10 GND
#10	3/4"C-5#10 & 1#10 GND
1	SEE KEY NOTE #1 AS INDICATED ON DRAWING
$ P	SWITCH WITH PILOT LIGHT @ 42"AFF
$ 3ab	3-WAY SWITCH, a & b INDICATES LIGHT FIXTURE TO BE SWITCHED (EACH A 3-WAY) MOUNTED @ 42" AFF
$	SWITCH MOUNTED @ +42" AFF
$ M	MOTOR RATED SWITCH
$ a,b,c,d	CIRCUIT SWITCH LEGS; WALL SWITCHES
60AS 35AF 3P	DISCONNECT SWITCH, 60AMP SWITCH, 35 AMP FUSE, 3 POLE W/ OVERCURRENT PROTECTION U.O.N.
M	100A UTILITY METER (OR AS NOTED)
3P 100AS 60AF	FUSED DISCONNECT SWITCH 100AMP SWITCH RATING WITH 60 AMP FUSES, 3 POLE
200AF 150AT 3P	MOLDED CASE CIRCUIT BREAKER 200 AMP FRAME, 150 AMP TRIP RATING, 3 POLE
J CAM	CCTV-VERIFY MOUNTING LOCATION AND REQUIREMENTS WITH CLIENT/OWNER.

1" CONDUIT MINIMUM IF UNDERGROUND (CONTRACTOR TO PROVIDE DEDICATED NEUTRALS FOR CIRCUITS WHICH DO NOT HAVE COMMON CIRCUIT HANDLE TIES ON BREAKERS FEEDING THE CIRCUITS)

COLOR CODE FOR CONDUCTORS

PROVIDE CONDUCTOR COLOR CODE AS FOLLOWS:
120/208VAC,3Ø,4W: BLUE,BLACK,RED FOR PHASE CONDUCTORS AND WHITE FOR NEUTRAL, GREEN FOR GROUND.

DERATING TABLE

NEC #310-8 ADJUSTMENT FACTORS

(a) MORE THAN THREE CURRENT-CARRYING CONDUCTORS IN A RACEWAY OR CABLE. WHERE THE NUMBER OF CURRENT-CARRYING CONDUCTORS IN A RACEWAY OR CABLE EXCEEDS THREE, THE ALLOWABLE AMPACITIES SHALL BE REDUCED AS SHOWN IN THE FOLLOWING TABLE:

NUMBER OF CURRENT-CARRYING CONDUCTORS	PERCENT OF VALUES IN TABLES AS ADJUSTED FOR AMBIENT TEMPERATURE IF NECESSARY
4 THROUGH 6	80
7 THROUGH 9	70
10 THROUGH 20	50
21 THROUGH 30	45
31 THROUGH 40	40
41 AND ABOVE	35

WHERE SINGLE CONDUCTORS OR MULTICONDUCTOR CABLES ARE STACKED OR BUNDLED LONGER THAN 24 INCHES (610 mm) WITHOUT MAINTAINING SPACING AND ARE NOT INSTALLED IN RACEWAYS, THE ALLOWABLE AMPACITY OF EACH CONDUCTOR SHALL BE REDUCED AS SHOWN IN THE ABOVE TABLE.

EXCEPTION NO. 1: WHERE CONDUCTORS OF DIFFERENT SYSTEMS, AS PROVIDED IN SECTION 300-3, ARE INSTALLED IN A COMMON RACEWAY OR CABLE, THE DERATING FACTORS SHOWN ABOVE SHALL APPLY TO THE NUMBER OF POWER AND LIGHTING (ARTICLES 210, 215, 220, AND 230) CONDUCTORS ONLY.

EXCEPTION NO. 2: FOR CONDUCTORS INSTALLED IN CABLE TRAYS, THE PROVISIONS OF SECTION 318-11 SHALL APPLY.

EXCEPTION NO. 3: DERATING FACTORS SHALL NOT APPLY TO CONDUCTORS IN NIPPLES HAVING A LENGTH NOT EXCEEDING 24 INCHES (610mm).

EXCEPTION NO. 4: DERATING FACTORS SHALL NOT APPLY TO UNDERGROUND CONDUCTORS ENTERING OR LEAVING AN OUTDOOR TRENCH IF THOSE CONDUCTORS HAVE PHYSICAL PROTECTION IN THE FORM OF RIGID METAL CONDUIT, INTERMEDIATE METAL CONDUIT, OR RIGID NONMETALLIC CONDUIT HAVING A LENGTH NOT EXCEEDING 10 FEET (3.05m) ABOVE GRADE AND THE NUMBER OF CONDUCTORS DOES NOT EXCEED FOUR.

EXCEPTION NO. 5: FOR OTHER LOADING CONDITIONS, ADJUSTMENT FACTORS AND AMPACITIES SHALL BE PERMITTED TO BE CALCULATED UNDER SECTION 310-15(b)

(FNC): SEE APPENDIX B, TABLE B-310-11 FOR ADJUSTMENT FACTORS FOR MORE THAN THREE CURRENT-CARRYING CONDUCTORS IN A RACEWAY OR CABLE WITH LOAD DIVERSITY.

(b) MORE THAN ONE CONDUIT, TUBE, OR RACEWAY. SPACING BETWEEN CONDUITS, TUBING, OR RACEWAYS SHALL BE MAINTAINED.

LIST OF DRAWINGS

SHEET #	SHEET DESCRIPTION	SHEET #	SHEET DESCRIPTION
E100	GENERAL NOTES, ABBREVIATIONS, SYMBOLS & DRAWING LIST	E400	SITE EV CHARGER PLAN
E130	SITE PLAN	E401	FIRST LEVEL POWER PLAN
E140	ENLARGED PROJECT ELECTRICAL PLAN	E402	SECOND LEVEL POWER PLAN
E141	ELECTRICAL SERVICE DETAILS	E410	ENLARGED POWER PLANS
E200	ELECTRICAL SINGLE LINE DIAGRAM	E420	ELECTRICAL SCHEDULE FOR MECHANICAL EQUIPMENT
E201	PANEL SCHEDULES	E421	FIRST LEVEL MECHANICAL POWER PLAN
E300	LIGHTING AND CONTROL SCHEDULE	E422	SECOND LEVEL MECHANICAL POWER PLAN
E301	FIRST LEVEL LIGHTING PLAN	E423	ROOF POWER PLAN
E302	SECOND LEVEL LIGHTING PLAN	E600	ELECTRICAL DETAILS
		E601	ELECTRICAL DETAILS

SCOPE OF WORK

PLAHNS FOR DESIGN BUILD CONTRACTOR FOR NEW 2 STORY BUILDING ON VACANT PROPERTY. WITH NEW 1200A, 120/208 VAC, 3Ø, 4W SERVICE FROM SCE VIA NEW SCE TRANSFORMER/ FEEDER. PROVIDE NEW INDOOR AND OUTDOOR LIGHTING, NEW POWER FOR EQUIPMENT & RECEPTACLES, MISCELLANEOUS EQUIPMENT, HVAC, ETC. PROVIDE NEW EVCS POWER & PV SYSTEM TBD.

LIST OF APPLICABLE CODES

LIST OF APPLICABLE CODES

2022 CALIFORNIA ADMINISTRATIVE CODE (CAC), PART 1, TITLE 24 CCR
2022 CALIFORNIA BUILDING CODE (CBC), PART 2, TITLE 24 CCR
2022 CALIFORNIA ELECTRICAL CODE (CEC), PART 3, TITLE 24 CCR
2022 CALIFORNIA MECHANICAL CODE (CMC), PART 4, TITLE 24 CCR
2022 CALIFORNIA PLUMBING CODE (CPC), PART 5, TITLE 24 CCR
2022 CALIFORNIA ENERGY CODE, PART 6, TITLE 24 CCR
2022 CALIFORNIA FIRE CODE (CFC), PART 9, TITLE 24 CCR
2022 CALIFORNIA EXISTING BUILDING CODE (CEBC), PART 10, TITLE 24 CCR
2022 CALIFORNIA GREEN BUILDING STANDARDS CODE (CALGREEN), PART 11, TITLE 24 CCR
2022 CALIFORNIA REFERENCED STANDARDS CODE, PART 12, TITLE 24 CCR
TITLE 19 CCR, PUBLIC SAFETY, STATE FIRE MARSHAL REGULATIONS

APPLICABLE STANDARDS

FOR A LIST OF APPLICABLE STANDARDS, INCLUDING CALIFORNIA AMENDMENTS TO THE NFPA STANDARDS, REFER TO CBC CHAPTER 35 AND CFC CHAPTER 80.

ABBREVIATIONS

A	AMPERES	LCL	LONG CONTINUOUS LOAD
AF	AMP FRAME/AMP FUSE	LV	LOW VOLTAGE
AFC	AVAILABLE FAULT CURRENT	M	METER
AFF	ABOVE FINISHED FLOOR	MC	METAL CLAD
AIC	AMP INTERRUPTING CURRENT	MDF	MAIN DISTRIBUTION FRAME
ARCH	ARCHITECT	MIN.	MINIMUM
AS	AMP SWITCH	MTD	MOUNTED
ASTM	AMERICAN SOCIETY OF TESTING MATERIAL(S)	MTB	MAIN TELEPHONE BACKBOARD
		MTG	MOUNTING
AT	AMP TRIP	MV	MEDIUM VOLTAGE
ATS	AUTOMATIC TRANSFER SWITCH	MH	MAN HOLE
AWG	AMERICAN WIRE GAGE	MFG	MANUFACTURER
BKBD	BACKBOARD	NEC	NATIONAL ELECTRICAL CODE
C	CONDUIT OR CEILING	(N)	NEW
CB	CIRCUIT BREAKER	NIC	NOT IN CONTRACT
CONT	CONTINUATION	NL	NIGHT LIGHT
CKT	CIRCUIT	NO	NORMALLY OPEN
CLG	CEILING	NC	NORMALLY CLOSED
CO	CONDUIT ONLY	OH	OVERHEAD
CTV	CABLE TELEVISION	P	POWER OR POLE
(CU)	COPPER	PBO	PROVIDED BY OTHERS
CW	COLD WATER PIPE	PNL	PANEL
DIS	DISCONNECT	PV	PHOTO VOLTAIC
DS	DISCONNECT SWITCH	(R)	REMOVED
DWG	DRAWING	RGS	RIGID GALVANIZED STEEL CONDUIT
ECD	ELECTRICAL CONTRACTOR		
EM	EMERGENCY LIGHT/FEEDER	RM	ROOM
EMT	ELECTRICAL METAL TUBING	SN	SYSTEM NEUTRAL
EOR	ENGINEER OF RECORD	SPD	SURGE PROTECTION DEVICE
EPR	ETHYLENE PROPYLENE RUBBER	TC	TIME CLOCKS
EVCS	ELECTRIC VEHICLE CHARGING STATION	TTB	TELEPHONE TERMINAL BOARD
		TTC	TELEPHONE TERMINAL CABINET
(F)	FRONT	TR	TRANSFORMER
FA	FIRE ALARM	TVSS	TRANSIENT VOLTAGE SURGE SUPPRESSOR
FS	SHALLOW FLOOR BOX		
FT	FEET	TYP	TYPICAL
GC	GENERAL CONTRACTOR	UG	UNDERGROUND
GFI	GROUND FAULT INTERRUPTER	UL	UNDERWRITERS LABORATORY
GND	GROUND	UON	UNLESS OTHERWISE NOTED
HP	HORSEPOWER	UNSW	UNSWITCHED
ID	IDENTIFICATION	V	VOLTS/VOLTAGE
IDF	INTERMEDIATE DISTRIBUTION FRAME	VA	VOLT AMPS
		VD	VOLTAGE DROP
IG	ISOLATED GROUND	W	WATTS/WATTAGE OR WIRE
JB	JUNCTION BOX	WP	WEATHERPROOF
K	KILO	W/	WITH
KVA	KILO VOLT AMPS=1000VA	(X)	EXISTING
LC	LIGHTING CONTACTOR	ɸ	PHASE

MOUNTING HEIGHT OVER OBSTRUCTION

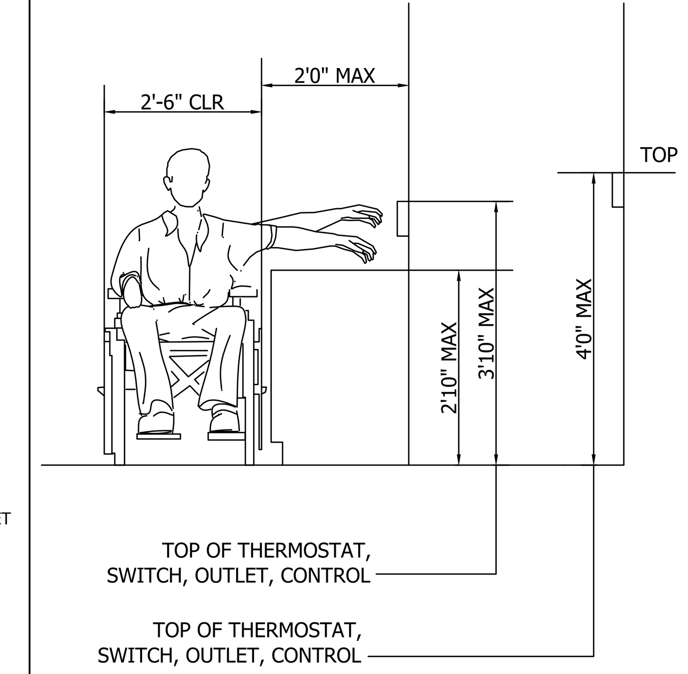

SITE/AREA MAP

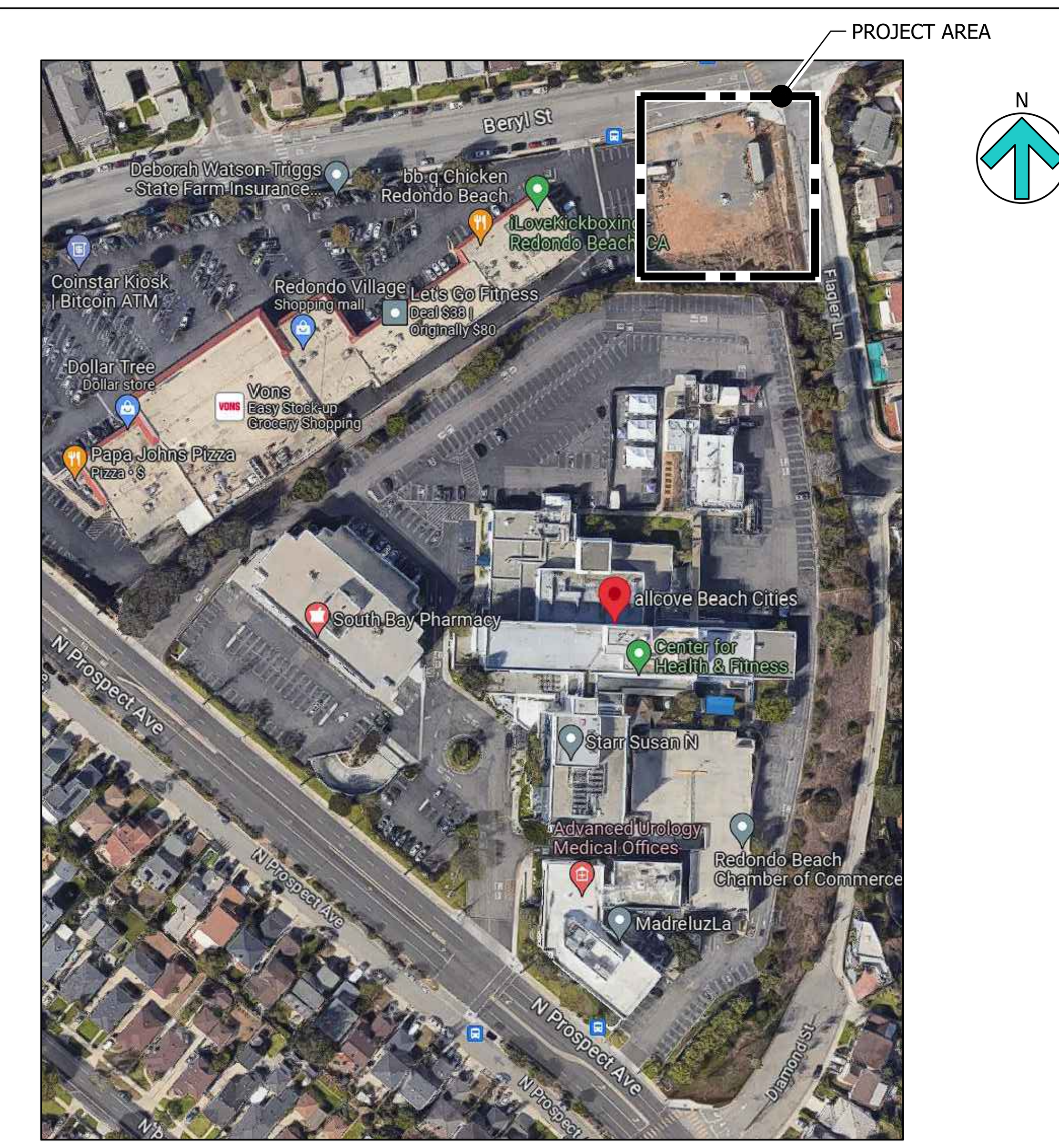

PAUL MURDOCH ARCHITECTS
6310 SAN VICENTE BLVD. SUITE 400
LOS ANGELES, CA 90048
T. 310 358-0993

THE DRAWINGS AND SPECIFICATIONS AND IDEAS, DESIGNS, AND ARRANGEMENTS REPRESENTED THEREBY ARE AND SHALL REMAIN THE PROPERTY OF THE ARCHITECT, AND NO PART THEREOF SHALL BE COPIED, DISCLOSED TO OTHERS, OR USED IN CONNECTION WITH ANY WORK OR PROJECT OTHER THAN THE SPECIFIC PROJECT FOR WHICH THEY HAVE BEEN PREPARED AND DEVELOPED WITHOUT THE WRITTEN CONSENT OF THE ARCHITECT. VISUAL CONTACT WITH THESE DRAWINGS OR SPECIFICATIONS SHALL CONSTITUTE CONCLUSIVE EVIDENCE OF ACCEPTANCE OF THESE RESTRICTIONS. WRITTEN DIMENSIONS ON THESE DRAWINGS SHALL HAVE PRECEDENCE OVER SCALED DIMENSIONS. CONTRACTORS SHALL VERIFY AND BE RESPONSIBLE FOR ALL DIMENSIONS AND CONDITIONS ON THE JOB AND THIS OFFICE MUST BE NOTIFIED OF ANY VARIATIONS FROM THE DIMENSIONS AND CONDITIONS SHOWN BY THESE DRAWINGS. SHOP DETAILS MUST BE SUBMITTED TO THIS OFFICE FOR REVIEW BEFORE PROCEEDING WITH FABRICATION.

LUCCI & ASSOCIATES INC.
CONSULTING ELECTRICAL ENGINEERS
3251 CORTE MALPASO, #511
CAMARILLO, CA 93012-8094
(805) 389-6520 FAX (805) 389-6519

LUCCI & ASSOCIATES, INC. reserve their commonlaw copyright and other property rights in these plans. These plans and drawings are not to be reproduced, changed, or copied in any form or manner whatsoever without first obtaining the expressed written permission and consent of LUCCI & ASSOC. INC nor are they to be assigned to any third party without obtaining said written permission and consent.

NO. DATE REVISION

allcove
BEACH CITIES HEALTH DISTRICT

100% PRELIMINARY DESIGN SUBMITTAL

PMA PROJECT NO.: 23-727

DRAWING TITLE: GENERAL NOTES, ABBREVIATIONS, SYMBOLS & DRAWING LIST

SCALE: AS NOTED

DATE: 02-28-2024

DRAWN: D.S./L.K. CHECKED: K.L.

SHEET NO.: E100

Copyright Lucci and Associates Consulting Electrical Engineers. Deviations from this drawing will not be made without their expressed written permission.

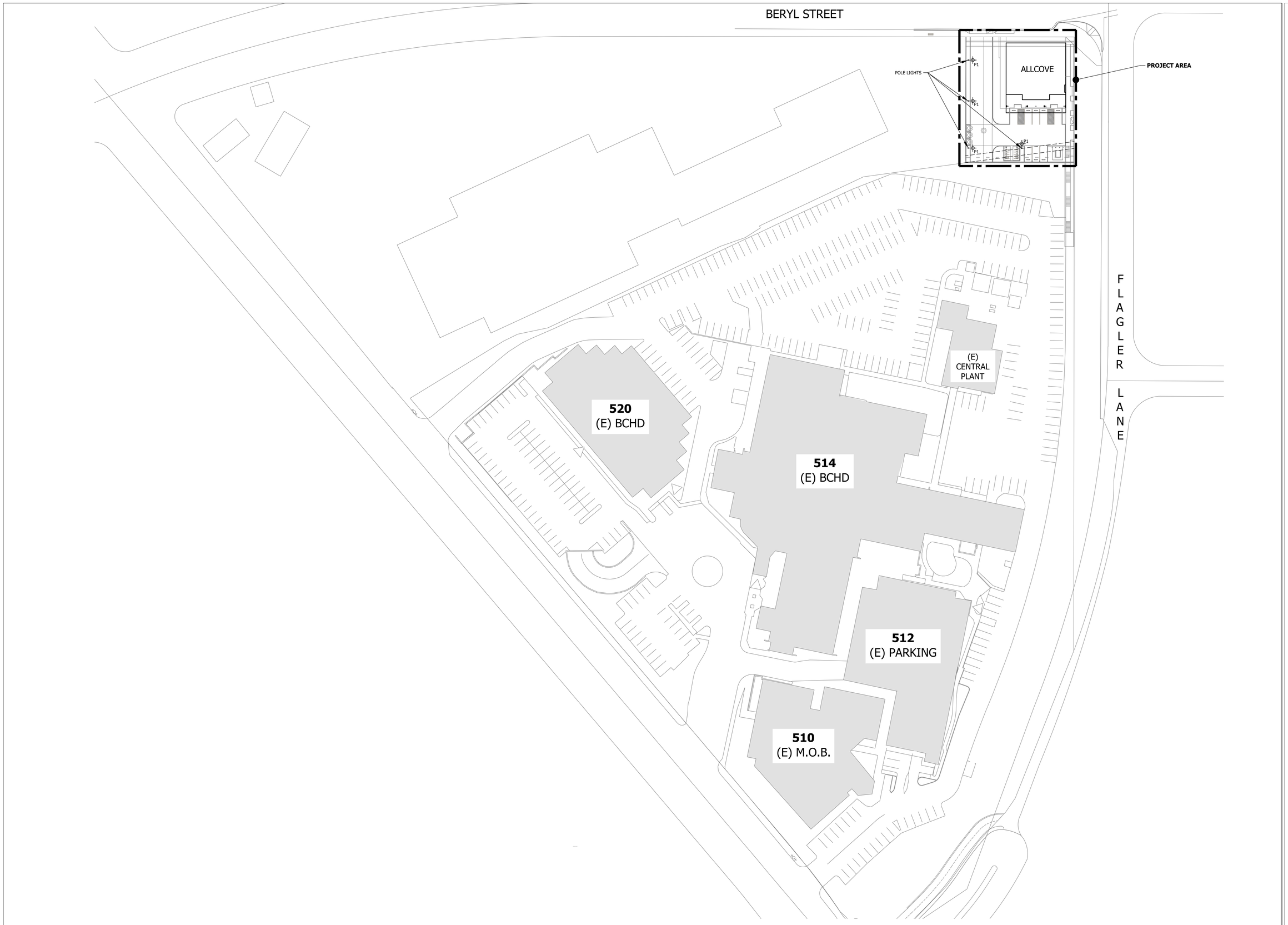

SITE LIGHTING PLAN

SCALE: 1/8"=1'-0"

1 - E130 -

PAUL MURDOCH ARCHITECTS

6310 SAN VICENTE BLVD. SUITE 400
LOS ANGELES, CA 90048
T. 310 358-0993

THE DRAWINGS AND SPECIFICATIONS AND IDEAS, DESIGNS, AND ARRANGEMENTS REPRESENTED THEREBY ARE AND SHALL REMAIN THE PROPERTY OF THE ARCHITECT AND NO PART THEREOF SHALL BE COPIED, DISCLOSED TO OTHERS, OR USED IN CONNECTION WITH ANY WORK OR PROJECT OTHER THAN THE SPECIFIC PROJECT FOR WHICH THEY HAVE BEEN PREPARED AND DEVELOPED WITHOUT THE WRITTEN CONSENT OF THE ARCHITECT. VISUAL CONTACT WITH THESE DRAWINGS OR SPECIFICATIONS SHALL CONSTITUTE CONCLUSIVE EVIDENCE OF ACCEPTANCE OF THESE RESTRICTIONS. WRITTEN DIMENSIONS ON THESE DRAWINGS SHALL HAVE PRECEDENCE OVER SCALED DIMENSIONS. CONTRACTORS SHALL VERIFY AND BE RESPONSIBLE FOR ALL DIMENSIONS AND CONDITIONS ON THE JOB AND THIS OFFICE MUST BE NOTIFIED OF ANY VARIATIONS FROM THE DIMENSIONS AND CONDITIONS SHOWN BY THESE DRAWINGS. SHOP DETAILS MUST BE SUBMITTED TO THIS OFFICE FOR REVIEW BEFORE PROCEEDING WITH FABRICATION.

LUCCI & ASSOCIATES INC.
CONSULTING ELECTRICAL ENGINEERS
3251 CORTE MALPASO, #611
CAMARILLO, CA 93012-8094
(805) 389-6320 FAX (805) 389-6519

LUCCI & ASSOCIATES, INC. reserve their commonlaw copyright and other property rights in these plans, specifications, and designs. These plans, specifications, and designs are not to be reproduced, changed, or copied in any form or manner whatsoever without first obtaining the expressed written permission and consent of LUCCI & ASSOCIATES, INC. Nor are they to be assigned to any third party without obtaining said written permission and consent.

NO.	DATE	REVISION

allcove
BEACH CITIES HEALTH DISTRICT

100% PRELIMINARY DESIGN SUBMITTAL

PMA PROJECT NO.
23-727

DRAWING TITLE
SITE PLAN

SCALE
AS NOTED

DATE
02-28-2024

DRAWN D.S./L.K. CHECKED K.L.

SHEET NO.
E130

Copyright Lucci and Associates Consulting Electrical Engineers. Deviations from this drawing will not be made without their expressed written permission.

L.A.I.# 23-727 PAPER SIZE 42"x30"

DRAFTER: CM01 DRAWING FILENAME: 23-727 E130 PATHNAME: G:\23\727\EL\Sheets DATE: 27 February 2024 TIME: 3:34 pm

Drafter:CM01; Paper Size: 12.0
Plot Scale: 1.0000 CSF:1.0000
File:23-727E130.dwg
Plot Area: Layout: E130
XREF:G:\23\727\Layouts\23-727 TB.dwg
XREF:G:\23\727\Layouts\23-727 TB Title Block.dwg
XREF:G:\23\727\Layouts\2023-10-05SUP-SUPDWG.dwg

Drafter: CM01; G:\23\727\EL\Sheets\23-727 E130.dwg; DATE: OCT 05, 2023 TIME: 4:13 PM

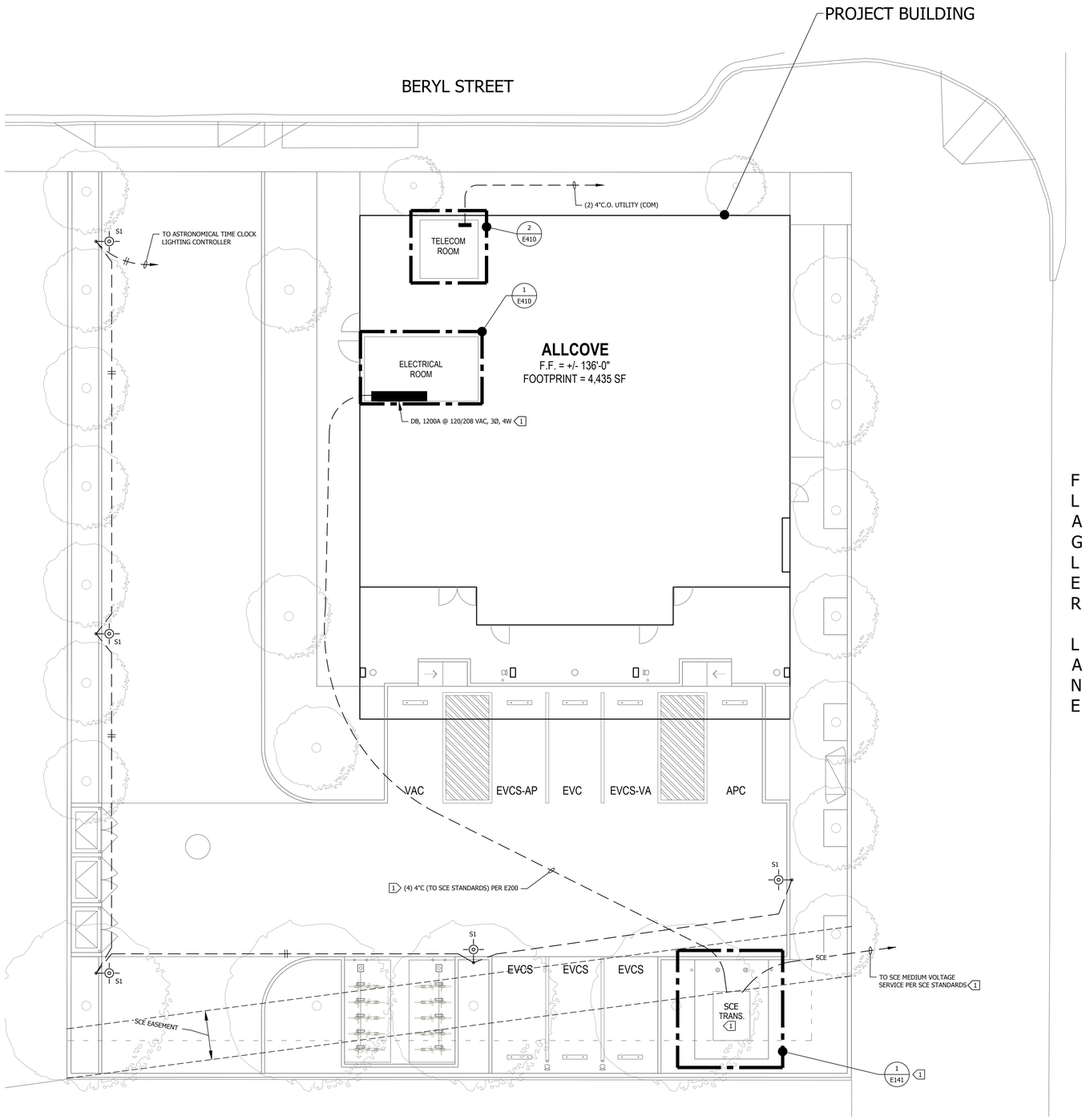

SCALE: 1/8"=1'-0"

0 4' 8' 16'

ENLARGED PROJECT ELECTRICAL PLAN

SCALE: 1/8"=1'-0"

1 - E140 -

N

SHEET NOTES:

1. VERIFY LOCATION OF ALL BUILDINGS AND APPENDITURES ON ARCHITECTURAL AND CIVIL PLANS.
2. CONTRACTOR SHALL VERIFY LOCATION AND REQUIREMENTS OF ALL ELECTRICAL DEVICES PRIOR TO BID. ROUGH-IN AND INSTALLATION.
3. CONTRACTOR SHALL FIELD VERIFY LOCATION OF ALL UNDERGROUND UTILITIES PRIOR TO ANY TRENCHING. CONTRACTOR SHALL PROTECT ALL EXISTING/REMAINING UNDERGROUND UTILITY SYSTEMS IN PLACE. CONTRACTOR SHALL REPAIR ANY UTILITY SYSTEM DAMAGED DURING CONSTRUCTION.
4. CONTRACTOR SHALL COORDINATE AND PROVIDE ALL SITE ELECTRICAL SERVICE REQUIREMENTS WITH SERVING UTILITY.
5. ALL SERVICE ENTRANCE EQUIPMENT SHOP DRAWINGS SHALL BE SUBMITTED TO THE LOCAL UTILITY COMPANY FOR APPROVAL, WITH WRITTEN APPROVAL RECEIVED PRIOR TO SUBMISSION TO ELECTRICAL ENGINEER FOR APPROVAL.
6. MINIMUM CONDUIT BURIAL DEPTH IS 24" MINIMUM.
7. 1" CONDUIT MINIMUM UNDERGROUND.
8. COORDINATE WORK WITH OTHER TRADES. OBTAIN ALL DRAWINGS THAT WILL REQUIRE COORDINATION AND PROVIDE ALL ELECTRICAL CONNECTIONS, DEVICES, AND WIRING REQUIRED WHETHER SHOWN ON ELECTRICAL DRAWINGS OR NOT.
9. CONTRACTOR SHALL FURNISH AND INSTALL PULL BOXES AS REQUIRED TO INSTALL CONDUCTORS PER CONDUCTOR MANUFACTURERS RECOMMENDATIONS, PER THE NATIONAL ELECTRICAL CODE AND PER LOCAL AUTHORITIES HAVING JURISDICTION.

KEY NOTES:

1 PER SCE STANDARDS (SEE E200 & E141).

PAUL MURDOCH ARCHITECTS

6310 SAN VICENTE BLVD. SUITE 400
LOS ANGELES, CA 90048
T. 310 358-0993

THE DRAWINGS AND SPECIFICATIONS AND IDEAS, DESIGNS, AND ARRANGEMENTS REPRESENTED THEREBY ARE AND SHALL REMAIN THE PROPERTY OF THE ARCHITECT AND NO PART THEREOF SHALL BE COPIED, DISCLOSED TO OTHERS, OR USED IN CONNECTION WITH ANY WORK OR PROJECT OTHER THAN THE SPECIFIC PROJECT FOR WHICH THEY HAVE BEEN PREPARED AND DEVELOPED WITHOUT THE WRITTEN CONSENT OF THE ARCHITECT. VISUAL CONTACT WITH THESE DRAWINGS OR SPECIFICATIONS SHALL CONSTITUTE CONCLUSIVE EVIDENCE OF ACCEPTANCE OF THESE RESTRICTIONS. WRITTEN DIMENSIONS ON THESE DRAWINGS SHALL HAVE PRECEDENCE OVER SCALED DIMENSIONS. CONTRACTORS SHALL VERIFY AND BE RESPONSIBLE FOR ALL DIMENSIONS AND CONDITIONS ON THE JOB AND THIS OFFICE MUST BE NOTIFIED OF ANY VARIATIONS FROM THE DIMENSIONS AND CONDITIONS SHOWN BY THESE DRAWINGS. SHOP DETAILS MUST BE SUBMITTED TO THIS OFFICE FOR REVIEW BEFORE PROCEEDING WITH FABRICATION.

LUCCI & ASSOCIATES INC.
CONSULTING ELECTRICAL ENGINEERS
3251 CORTE MALPASO, #611
CAMARILLO, CA 93012-8094
(805) 389-6320 FAX (805) 389-6519

LUCCI & ASSOCIATES, INC. reserve their commonlaw copyright and other property rights in these plans, specifications, ideas, designs and arrangements. These plans, specifications, designs and arrangements are not to be reproduced, changed, or copied in any form or manner whatsoever without first obtaining the expressed written permission of Lucci & Associates, nor are they to be assigned to any third party without obtaining said written permission and consent.

NO.	DATE	REVISION

allcove
BEACH CITIES HEALTH DISTRICT

100% PRELIMINARY DESIGN SUBMITTAL

PMA PROJECT NO.
23-727

DRAWING TITLE
ENLARGED PROJECT ELECTRICAL PLAN

SCALE
AS NOTED

DATE
02-28-2024

DRAWN D.S./L.K. CHECKED K.L.

SHEET NO.
E140

Copyright Lucci and Associates Consulting Electrical Engineers. Deviations from this drawing will not be made without their expressed written permission.

L.A.I.# 23-727 PAPER SIZE 42"x30"

DRAFTER: CM01 DRAWING FILENAME: 23-727 E140 PATHNAME: G:\23\727\EL\Sheets DATE: 27 February 2024 TIME: 3:34 pm

Drafter: CM01 Paper Size: 1.1,8
Drawing Name: G:\23\727\EL\Sheets\23-727 E140.dwg
Wed 27 Feb, 2024 - 3:34pm
XREF(S):G:\23\727\EL\Xrefs\23-727 TB.dwg
XREF(S):G:\23\727\EL\Xrefs\23-727 E140 Grid.dwg
XREF(S):G:\23\727\EL\Xrefs\23-727 E140 Grid Text.dwg

Drafter: CM01: G:\23\727\EL\Sheets\23-727 E140.dwg: DATE: FEB 27, 2024 TIME: 3:04 PM

SOUTHERN CALIFORNIA EDISON
An EDISON INTERNATIONAL® Company

Figure 3–3: Protective Barrier for Service Equipment Installation Requirements

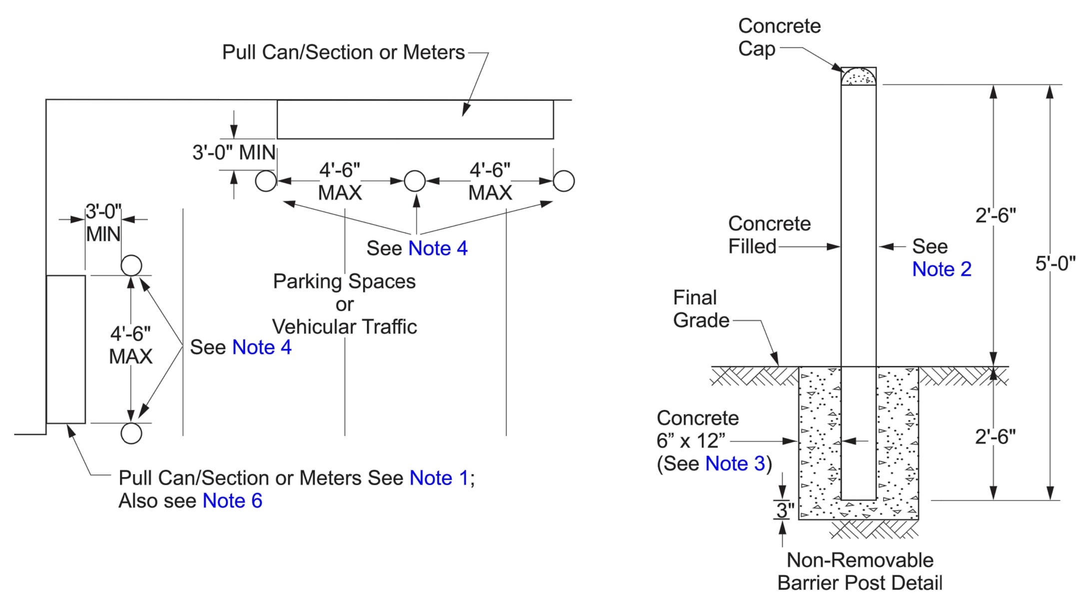

Note(s):

1. Meters located on a wall adjacent to any parking area, or area accessible to vehicular traffic, shall be protected by non-removable barriers. Wheel stops and removable barriers are not acceptable substitutes. Maintain a minimum of three feet of clear and level working space in front of all the service equipment enclosures. Barriers must be so positioned as to allow all service equipment doors/panels to be opened 90 degrees.
2. Use four-inch galvanized steel pipe (1/4-inch minimum wall) filled with concrete.
3. The concrete encasement shall be a minimum of six inches thick in stable soil and 12 inches thick in sandy or unstable soil.
4. Barriers must be installed in line with each end of the service equipment to prevent vehicle contact. The distance between barriers shall not exceed 4'-6".
5. Before excavating for the barriers, call DIG ALERT at 1-811-227-2600 for mark-out service. Call at least 48 hours prior to excavating.
6. See Figure 3–2.

EFFECTIVE DATE 1-26-2018	Underground Service Connections 0–600 V	ESR–3
APPROVED B.C.	Electrical Service Requirements ►SCE Public◄	PAGE 3–21

SCE BOLLARD DETAIL 5

SCALE: NONE REMOVABLE AND NON REMOVABLE - E141

SOUTHERN CALIFORNIA EDISON
An EDISON INTERNATIONAL® Company

Figure 3–5: Customer Conduit Installation and Typical Concrete Conduit Encasement

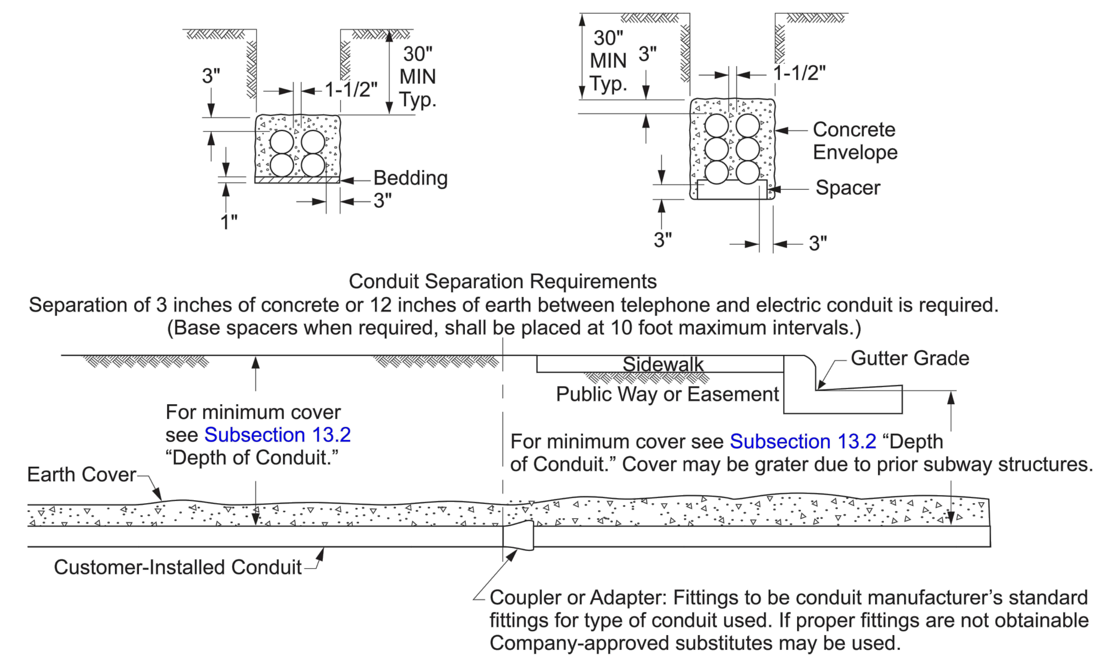

Table 3–3: Concrete Encasement Requirements

Conduit/Cable	Encasement[a/] Semi	Encasement[a/] Full
Galvanized steel conduit	None Required	None Required
1 or 2 direct burial-type conduits	None Required	None Required
3 or 4 conduits in a bank (See Exhibit A, Figure 3–5.)	X	
More than 4 conduits in a bank (See Exhibit B, Figure 3–5.)		X

[a/] Contact the local Service Planning Office for encasement material specifications.

Table 3–4: Edison-Approved Service Conduit Material

Material[a/]
Hot dipped galvanized steel (HDG)—Includes intermediate metal conduit (IMC).
Rigid plastic polyvinyl chloride (PVC)—Sch. 40 (MIN) Edison-approved or UL Listed
Semi-rigid plastic — Direct Buried (DB) material–60, DB–100.
For DB installations, DB–60 conduit may be used for all sizes smaller than 4"; DB–100 conduit is required when 4", 5", or 6" conduit is installed.

[a/] Subject to approval by local inspection authorities.

EFFECTIVE DATE 1-26-2018	Underground Service Connections 0–600 V	ESR–3
APPROVED B.C.	Electrical Service Requirements ►SCE Public◄	PAGE 3–23

SCE CONDUIT DETAIL 4

SCALE: NTS VERIFY WITH SCE - E600

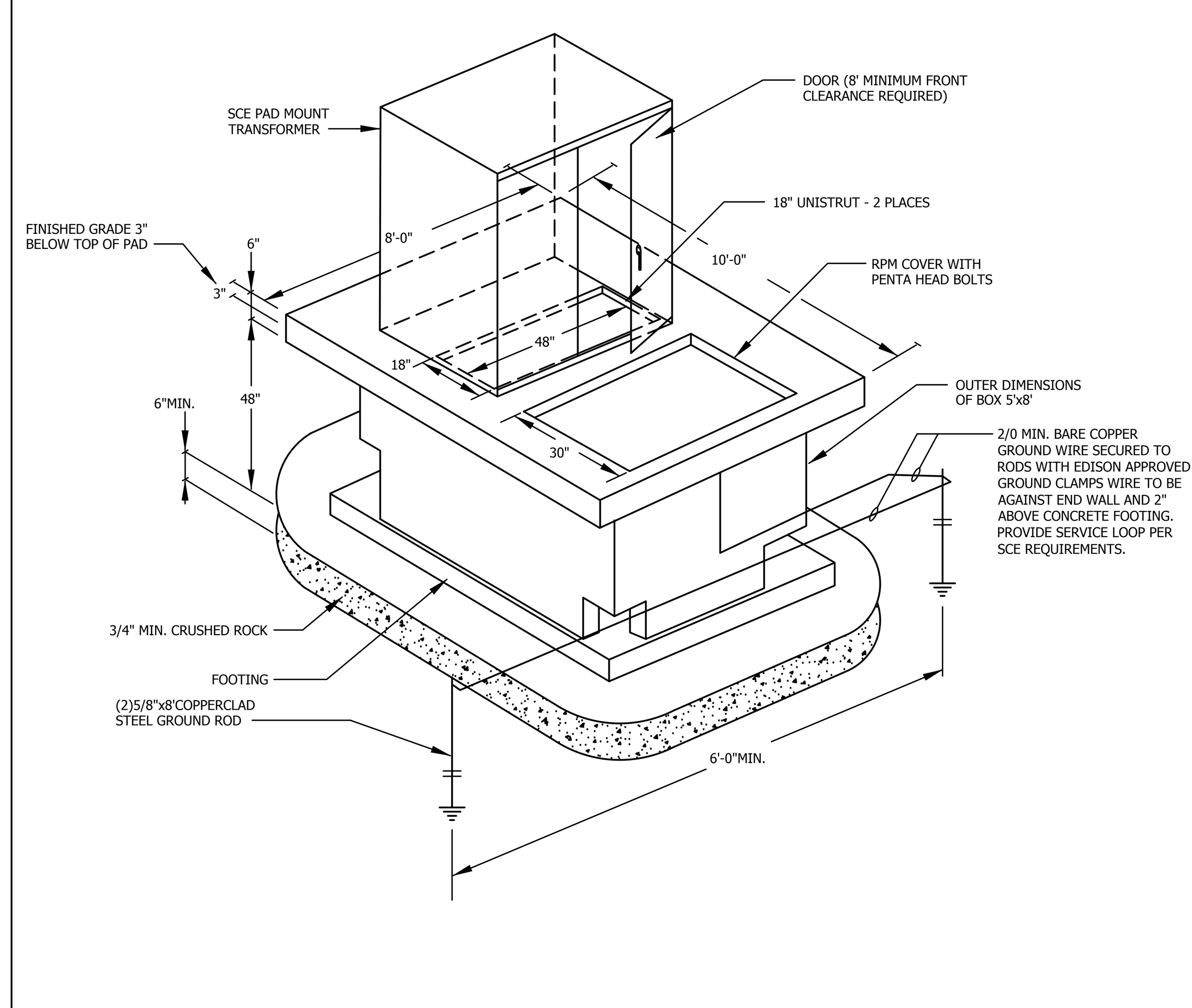

SERVICE TRANSFORMER SLAB BOX DETAIL 3

SCALE: NTS VERIFY WITH SCE - E141

DETAIL NOTES:

1. TRENCH DEPTH SHALL BE 43" MIN. BELOW ELEVATION OF FINISHED GRADE.

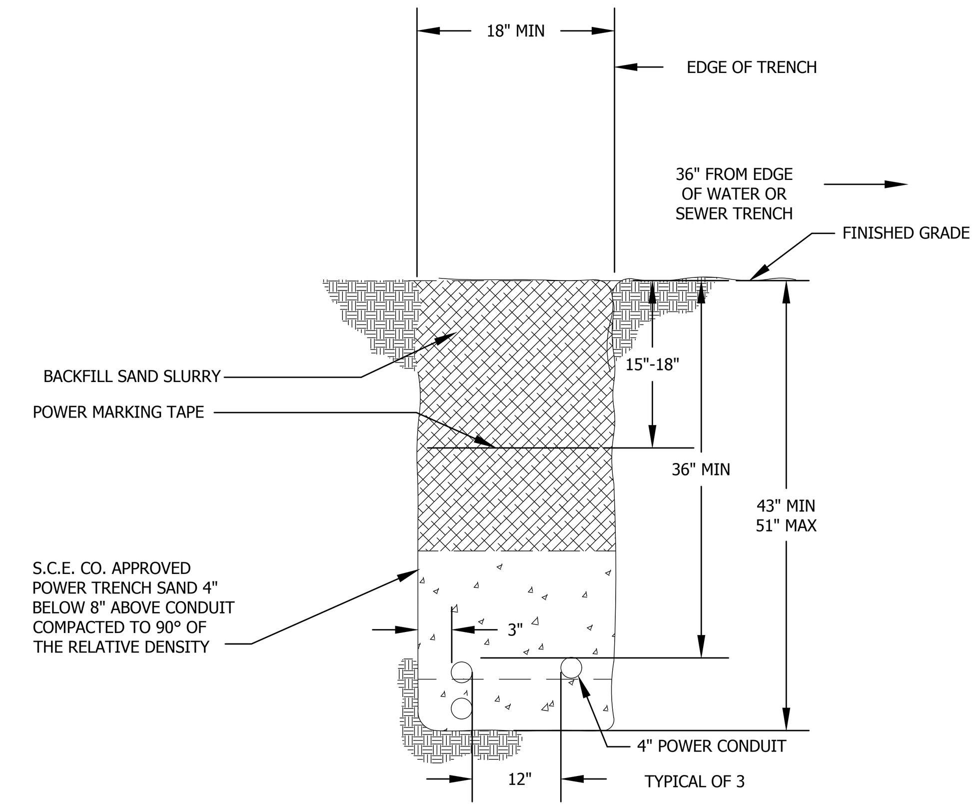

TYPICAL SCE TRENCH DETAIL 2

SCALE: NONE - E141

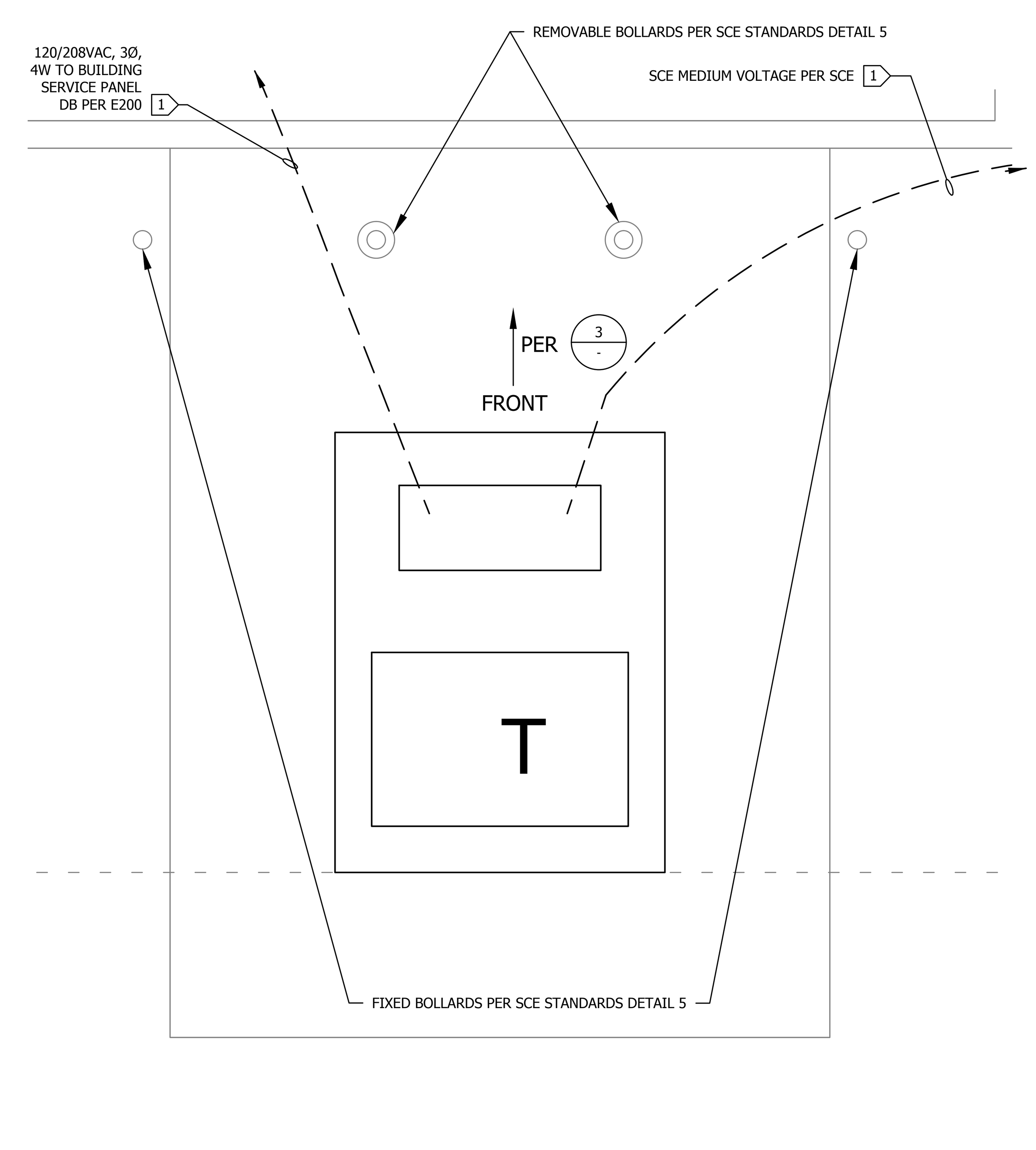

ENLARGED TRANSFORMER PAD DETAIL 1

SCALE: 1/2"=1'-0" - E141

1/2" - 1'-0"
0 1' 2' 4'

N

SHEET NOTES:

1. VERIFY LOCATION OF ALL BUILDINGS AND APPENDITURES ON ARCHITECTURAL AND CIVIL PLANS.
2. CONTRACTOR SHALL VERIFY LOCATION AND REQUIREMENTS OF ALL ELECTRICAL DEVICES PRIOR TO BID. ROUGH-IN AND INSTALLATION.
3. CONTRACTOR SHALL, IN ROUTING ALL CIRCUITS, INCREASE CONDUCTOR AND CONDUIT SIZE TO ALLOW FOR VOLTAGE DROP SHOULD THE CONTRACTOR EXCEED ROUTING INDICATED ON DRAWING. ENGINEER OF RECORD MUST BE NOTIFIED PRIOR TO ANY DEVIATIONS FROM APPROVED PLAN CHECK (PERMIT SET) DRAWINGS.
4. CONTRACTOR SHALL FIELD VERIFY LOCATION OF ALL UNDERGROUND UTILITIES PRIOR TO ANY TRENCHING. CONTRACTOR SHALL PROTECT ALL EXISTING/REMAINING UNDERGROUND UTILITY SYSTEMS IN PLACE. CONTRACTOR SHALL REPAIR ANY UTILITY SYSTEM DAMAGED DURING CONSTRUCTION.
5. ALL CONDUIT 90° CONDUIT BENDS AND RISERS SHALL BE PVC COATED RIGID STEEL.
6. CONTRACTOR SHALL COORDINATE AND PROVIDE ALL SITE ELECTRICAL SERVICE REQUIREMENTS WITH SERVING UTILITY.
7. ALL SERVICE ENTRANCE EQUIPMENT SHOP DRAWINGS SHALL BE SUBMITTED TO THE LOCAL UTILITY COMPANY FOR APPROVAL, WITH WRITTEN APPROVAL RECEIVED PRIOR TO SUBMISSION TO ELECTRICAL ENGINEER FOR APPROVAL.
8. VERIFY LOCATION OF ALL EQUIPMENT AND DEVICES ON ARCHITECTURAL AND CIVIL PLANS.
9. MINIMUM CONDUIT BURIAL DEPTH IS 24".
10. CONTRACTOR TO PROVIDE GROUND CONDUCTORS IN ALL CONDUITS.
11. 1" CONDUIT MINIMUM UNDERGROUND.
12. COORDINATE WORK WITH OTHER TRADES. OBTAIN ALL DRAWINGS THAT WILL REQUIRE COORDINATION AND PROVIDE ALL ELECTRICAL CONNECTIONS, DEVICES, AND WIRING REQUIRED WHETHER SHOWN ON ELECTRICAL DRAWINGS OR NOT.
13. CONTRACTOR SHALL FURNISH AND INSTALL PULL BOXES AS REQUIRED TO INSTALL CONDUCTORS PER CONDUCTOR MANUFACTURERS RECOMMENDATIONS, PER THE NATIONAL ELECTRICAL CODE AND PER LOCAL AUTHORITIES HAVING JURISDICTION.

KEY NOTES:

1 PER SCE STANDARDS.

PAUL MURDOCH ARCHITECTS

6310 SAN VICENTE BLVD. SUITE 400
LOS ANGELES, CA 90048
T. 310 358-0993

THE DRAWINGS AND SPECIFICATIONS AND IDEAS, DESIGNS, AND ARRANGEMENTS REPRESENTED THEREBY ARE AND SHALL REMAIN THE PROPERTY OF THE ARCHITECT, AND NO PART THEREOF SHALL BE COPIED, DISCLOSED TO OTHERS, OR USED IN CONNECTION WITH ANY WORK OR PROJECT OTHER THAN THE SPECIFIC PROJECT FOR WHICH THEY HAVE BEEN PREPARED AND DEVELOPED WITHOUT THE WRITTEN CONSENT OF THE ARCHITECT. VISUAL CONTACT WITH THESE DRAWINGS OR SPECIFICATIONS SHALL CONSTITUTE CONCLUSIVE EVIDENCE OF ACCEPTANCE OF THESE RESTRICTIONS. WRITTEN DIMENSIONS ON THESE DRAWINGS SHALL HAVE PRECEDENCE OVER SCALED DIMENSIONS. CONTRACTORS SHALL VERIFY AND BE RESPONSIBLE FOR ALL DIMENSIONS AND CONDITIONS ON THE JOB AND THIS OFFICE MUST BE NOTIFIED OF ANY VARIATIONS FROM THE DIMENSIONS AND CONDITIONS SHOWN BY THESE DRAWINGS. SHOP DETAILS MUST BE SUBMITTED TO THIS OFFICE FOR REVIEW BEFORE PROCEEDING WITH FABRICATION.

LUCCI & ASSOCIATES INC.
CONSULTING ELECTRICAL ENGINEERS
3251 CORTE MALPASO, #511
CAMARILLO, CA 93012-8094
(805) 389-6520 FAX (805) 389-6519

LUCCI & ASSOCIATES, INC. reserve their commonlaw copyright and other property rights in these plans. These plans and drawings are not to be reproduced, changed, or copied in any form or manner whatsoever without first obtaining the expressed written permission and consent of LUCCI & ASSOC. INC nor are they to be assigned to any third party without obtaining said written permission and consent.

NO.	DATE	REVISION

allcove
BEACH CITIES HEALTH DISTRICT

100% PRELIMINARY DESIGN SUBMITTAL

PMA PROJECT NO. 23-727

DRAWING TITLE: ELECTRICAL SERVICE DETAILS

SCALE: AS NOTED

DATE: 02-28-2024

DRAWN: D.S./L.K. CHECKED: K.L.

SHEET NO. E141

Copyright Lucci and Associates Consulting Electrical Engineers. Deviations from this drawing will not be made without their expressed written permission.

L.A.I.# 23-727 PAPER SIZE 42"x30"

DRAFTER: CM01 DRAWING FILENAME: 23-727 E141 PATHNAME: G:\23\727\EL\Sheets DATE: 27 February 2024 TIME: 3:34 pm

Drafter: CM01: G:\23\727\EL\Sheets\23-727 E141.dwg; DATE: FEB 26, 2024 TIME: 2:31 PM

LOAD SUMMARY		
DEVICE	LOAD (KVA)	AMPS
L0	TBD	TBD
L1	TBD	TBD
L2	TBD	TBD
L3	TBD	TBD
L4	TBD	TBD
L5	TBD	TBD
EV	TBD	TBD
MP	TBD	TBD
TOTAL	TBD	TBD

FEEDER SCHEDULE				
TAG	CONDUIT/CONDUCTOR	FROM	TO	APPROX. LENGTH
1	3/0 BARE COPPER GROUND	-	-	
2	NOT USED			
3	1"C-3#2 & 1#8 GROUND	DP	EM	
4	2"C-4#3/0 & 1#6 GROUND	DP	L0	
5	2"C-4#3/0 & 1#6 GROUND	DP	L1	
6	2"C-4#3/0 & 1#6 GROUND	DP	L2	
7	2"C-4#3/0 & 1#6 GROUND	DP	L3	
8	2"C-4#3/0 & 1#6 GROUND	DP	L4	
9	2"C-4#3/0 & 1#6 GROUND	DP	L5	
10	2"C-10#3/0 & 1#6 GROUND	DP	L6	
11	(2)2"C-4#3/0 & 1#2 GROUND	DP	EV	
12	2"C-4#3/0 & 1#6 GROUND	DP	MD	
13	2"C-4#3/0 & 1#6 GROUND	DP	DISC PV	
14	2"C-4#3/0 & 1#6 GROUND	DP	PV INVERTER	
15	1-1/2"C - 4#1/0 & 1#6 GND	DP	ELEVATOR	
16	.	.	.	

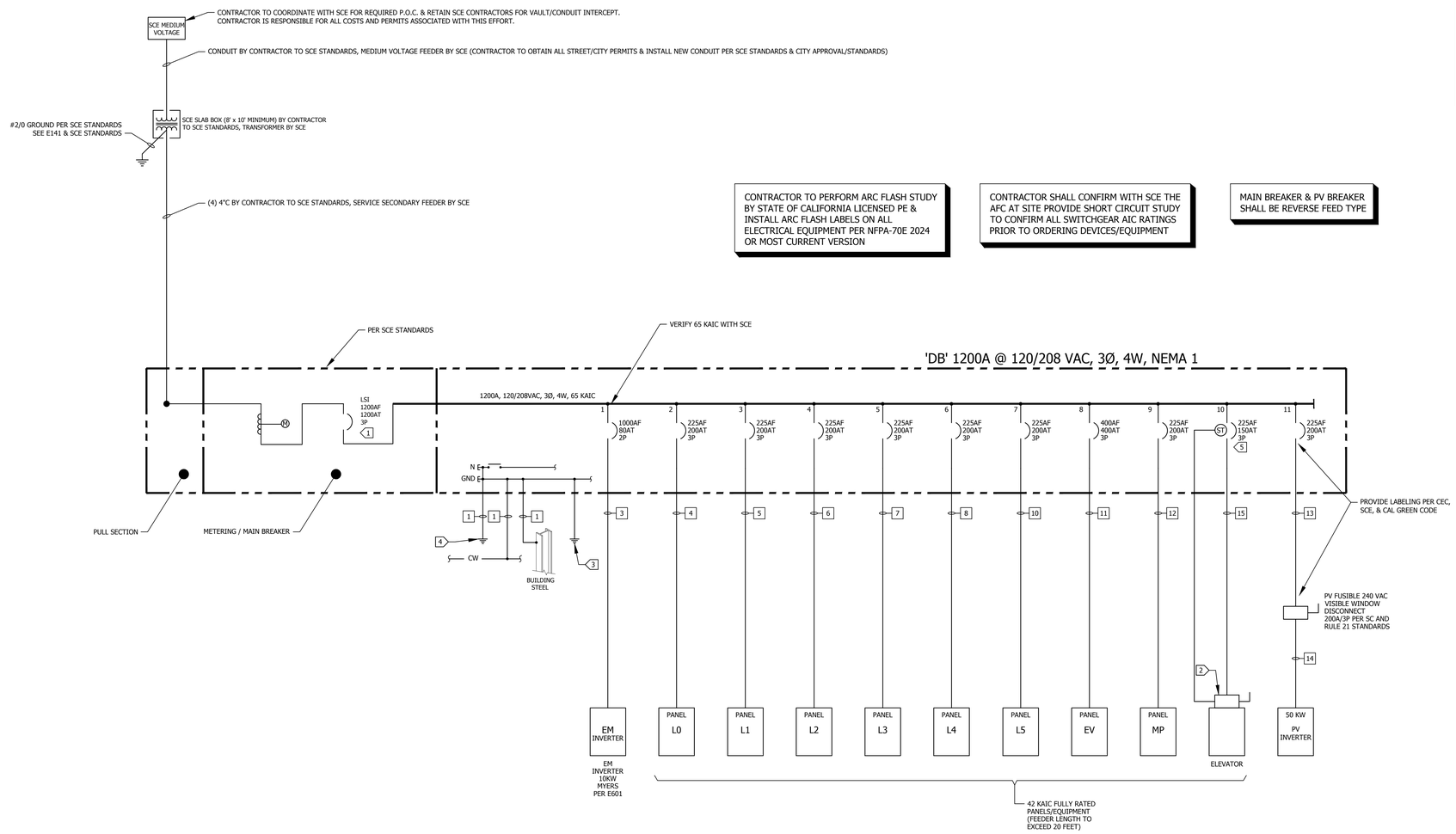

CONTRACTOR TO PERFORM ARC FLASH STUDY BY STATE OF CALIFORNIA LICENSED PE & INSTALL ARC FLASH LABELS ON ALL ELECTRICAL EQUIPMENT PER NFPA-70E 2024 OR MOST CURRENT VERSION

CONTRACTOR SHALL CONFIRM WITH SCE THE AFC AT SITE PROVIDE SHORT CIRCUIT STUDY TO CONFIRM ALL SWITCHGEAR AIC RATINGS PRIOR TO ORDERING DEVICES/EQUIPMENT

MAIN BREAKER & PV BREAKER SHALL BE REVERSE FEED TYPE

SHEET NOTES:

1. VERIFY LOCATION OF ALL BUILDINGS AND APPENDITURES ON ARCHITECTURAL AND CIVIL PLANS.
2. CONTRACTOR SHALL VERIFY LOCATION & REQUIREMENTS OF ALL ELECTRICAL DEVICES PRIOR TO BID. ROUGH-IN & INSTALLATION.
3. CONTRACTOR SHALL, IN ROUTING ALL CIRCUITS, INCREASE CONDUCTOR & CONDUIT SIZE TO ALLOW FOR VOLTAGE DROP SHOULD THE CONTRACTOR EXCEED ROUTING INDICATED ON DRAWING. ENGINEER OF RECORD MUST BE NOTIFIED PRIOR TO ANY DEVIATIONS FROM APPROVED PLAN CHECK (PERMIT SET) DRAWINGS.
4. CONTRACTOR SHALL COORDINATE AND PROVIDE ALL SITE ELECTRICAL SERVICE REQUIREMENTS WITH SERVING UTILITY.
5. ALL SERVICE ENTRANCE EQUIPMENT SHOP DRAWINGS SHALL BE SUBMITTED TO THE LOCAL UTILITY COMPANY FOR APPROVAL, WITH WRITTEN APPROVAL RECEIVED PRIOR TO SUBMISSION TO ELECTRICAL ENGINEER FOR APPROVAL.
6. MINIMUM CONDUIT BURIAL DEPTH IS 24", 36" MINIMUM BELOW STREETS & PARKING LOTS FOR 0-600 VOLT SYSTEMS.
7. 1" CONDUIT MINIMUM UNDERGROUND.
8. COORDINATE WORK WITH OTHER TRADES. OBTAIN ALL DRAWINGS THAT WILL REQUIRE COORDINATION AND PROVIDE ALL ELECTRICAL CONNECTIONS, DEVICES, AND WIRING REQUIRED WHETHER SHOWN ON ELECTRICAL DRAWINGS OR NOT.
9. CONTRACTOR SHALL FURNISH AND INSTALL PULL BOXES AS REQUIRED TO INSTALL CONDUCTORS PER CONDUCTOR MANUFACTURERS RECOMMENDATIONS, PER THE NATIONAL ELECTRICAL CODE AND PER LOCAL AUTHORITIES HAVING JURISDICTION.

KEY NOTES:

1. PROVIDE REDUCED ENERGY LET THRU DEVICE PER NEC ARTICLE 240.57
2. DISCONNECT 200A, 240 VAC, 3 POLE, FUSIBLE WITH REJECTION FUSES RATED PER ELEVATOR MFG, WITH 120 VAC AUX CONTACTS.
3. 3/0 UFER.
4. 3/4" x 10'-0" GROUND ROD.
5. SHUNT TRIP (120 VAC) BREAKER

ELECTRICAL SINGLE LINE DIAGRAM

SCALE: NTS

1 / E200

PAUL MURDOCH ARCHITECTS

6310 SAN VICENTE BLVD. SUITE 400
LOS ANGELES, CA 90048
T. 310 358-0993

THE DRAWINGS AND SPECIFICATIONS AND IDEAS, DESIGNS, AND ARRANGEMENTS REPRESENTED THEREBY ARE AND SHALL REMAIN THE PROPERTY OF THE ARCHITECT AND NO PART THEREOF SHALL BE COPIED, DISCLOSED TO OTHERS, OR USED IN CONNECTION WITH ANY WORK OR PROJECT OTHER THAN THE SPECIFIC PROJECT FOR WHICH THEY HAVE BEEN PREPARED AND DEVELOPED WITHOUT THE WRITTEN CONSENT OF THE ARCHITECT. VISUAL CONTACT WITH THESE DRAWINGS OR SPECIFICATIONS SHALL CONSTITUTE CONCLUSIVE EVIDENCE OF ACCEPTANCE OF THESE RESTRICTIONS. WRITTEN DIMENSIONS ON THESE DRAWINGS SHALL HAVE PRECEDENCE OVER SCALED DIMENSIONS. CONTRACTORS SHALL VERIFY AND BE RESPONSIBLE FOR ALL DIMENSIONS AND CONDITIONS ON THE JOB AND THIS OFFICE MUST BE NOTIFIED OF ANY VARIATIONS FROM THE DIMENSIONS AND CONDITIONS SHOWN BY THESE DRAWINGS. SHOP DETAILS MUST BE SUBMITTED TO THIS OFFICE FOR REVIEW BEFORE PROCEEDING WITH FABRICATION.

LUCCI & ASSOCIATES
CONSULTING ELECTRICAL ENGINEERS
3251 CORTE MALPASO, #611
CAMARILLO, CA 93012-8094
(805) 389-6320 FAX (805) 389-6519

LUCCI & ASSOCIATES, INC. reserve their commonlaw copyright and other property rights in these plans, specifications, ideas, designs and arrangements. These plans and specifications are not to be reproduced, changed, or copied in any form or manner whatsoever, nor are they to be assigned to any third party, without first obtaining the expressed written permission and consent of Lucci and Associates. In the event of unauthorized reuse of these plans and specifications by a third party, the third party agrees to hold harmless Lucci and Associates for any liability resulting from any third party without obtaining said written permission and consent.

NO.	DATE	REVISION

allcove
BEACH CITIES HEALTH DISTRICT

100% PRELIMINARY DESIGN SUBMITTAL

PMA PROJECT NO. 23-727

DRAWING TITLE: ELECTRICAL SINGLE LINE DIAGRAM

SCALE: AS NOTED

DATE: 02-28-2024

DRAWN: D.S./L.K. CHECKED: K.L.

SHEET NO. E200

Copyright Lucci and Associates Consulting Electrical Engineers. Deviations from this drawing will not be made without their expressed written permission.

L.A.I.# 23-727 PAPER SIZE 42"x30"

DRAFTER: CM01 DRAWING FILENAME: 23-727 E200 PATHNAME: G:\23\727\EL\Sheets DATE: 27 February 2024 TIME: 3:34 pm

Drafter: CM01 Paper Size: 1.5,9
File: G:\23\727\EL\Sheets\23-727 E200.dwg
Plot Scale: 1.0000 x 1.0000
WED 02:37:07,Layout:E200
XREFS:G:\23\727\EL\Xrefs\23-727 Fb.dwg
XREFS:G:\23\727\EL\Xrefs\Title Block.dwg

Drafter: CM01; G:\23\727\EL\Sheets\23-727 E200.dwc; DATE: OCT 09, 2023 TIME: 3:07 PM

TIME: 3:34 pm DATE: 27 February 2024 PATHNAME: G:\23\727\EL\Sheets DRAWING FILENAME: 23-727 E201 DRAFTER: CM01

PANEL NUMBER EV VOLTAGE 120/208 PHASE 3 WIRE 4
SOURCE DB A.I.C. 42 KAIC
PANEL LOCATION ELECTRICAL ROOM BUS AMPERE RATING 400
■ NEMA 1 ■ COPPER BUSS ■ MAIN LUGS ONLY ■ SURFACE MOUNTING

LCL	MISC	RCPT	LITE	CIRCUIT DESCRIPTION	LOAD(VA) A	LOAD(VA) B	LOAD(VA) C	BRKR POLE	BRKR AMP	CKT	CKT	BRKR AMP	BRKR POLE	LOAD(VA) A	LOAD(VA) B	LOAD(VA) C	CIRCUIT DESCRIPTION	MISC	RCPT	LITE	LCL
				SPARE	-			1	20	1	2	1	20	-			SPARE				
				EVCS1		3840			40	3	4	40			3840		EVCS2-1				
				EVCS1			3840	2		5	6		2			3840	EVCS2-1				
				EVCS3	3840				40	7	8	40		3840			EVCS2-2				
				EVCS3		3840		2		9	10		2		3840		EVCS2-2				
				EVCS4-1			3840		40	11	12	40				3840	EVCS5				
				EVCS4-1	3840			2		13	14		2	3840			EVCS5				
				EVCS4-2		3840			40	15	16	40			3840		EVCS6 FUTURE				
				EVCS4-2			3840	2		17	18		2			3840	EVCS6 FUTURE				
				SPARE	-			1	20	19	20	40		-			SPARE				
				SPARE		-		1	20	21	22		2		-		SPARE				
				SPARE			-	1	20	23	24	20	1			-	SPARE				
				SPARE	-			1	20	25	26	20	1	-			SPARE				
				BIKE CHARGER		1000		1	20	27	28	20	1		-		SPARE				
				BIKE CHARGER			1000	1	20	29	30	20	1			-	SPARE				
				TOTALS	7680	12520	12520							7680	11520	11520	TOTALS				

L.C.L. VOLT AMPS: 15860 PHASE A 3840 PHASE B 6010 PHASE C 6010
TOTAL VOLT AMPS: 79300 PHASE A 19200 PHASE B 30050 PHASE C 30050
TOTAL AMPS: 220 PHASE A 160 PHASE B 250 PHASE C 250

PANEL NUMBER MP VOLTAGE 120/208 PHASE 3 WIRE 4
SOURCE DB A.I.C. 42 KAIC
PANEL LOCATION ELECTRICAL ROOM BUS AMPERE RATING 225
■ NEMA 3R ■ COPPER BUSS ■ MAIN LUGS ONLY ■ SURFACE MOUNTING

LCL	MISC	RCPT	LITE	CIRCUIT DESCRIPTION	LOAD(VA) A	LOAD(VA) B	LOAD(VA) C	BRKR POLE	BRKR AMP	CKT	CKT	BRKR AMP	BRKR POLE	LOAD(VA) A	LOAD(VA) B	LOAD(VA) C	CIRCUIT DESCRIPTION	MISC	RCPT	LITE	LCL
				HP-1	3708				40	1	2	1	15	520			EF-1				
				HP-1		3708				3	4	1	15		520		EF-2				
				HP-1			3708	3		5	6	1	15			520	EF-3				
				HP-2	2712				35	7	8	1	15	520			SF-1				
				HP-2		2712				9	10	1	15		520		SF-2				
				HP-2			2712	3		11	12	1	15			1200	WH-1				
				HP-3	3420				40	13	14	1	15	1200			WH-1				
				HP-3		3420				15	16	1	15		-		SPARE				
				HP-3			3420	3		17	18	1	15			-	SPARE				
				FC-1.1/1.2/1.3	744				15	19	20	1	20	-			SPARE				
				FC-1.1/1.2/1.3		744		2		21	22				-		SPARE				
				FC-1.4/1.5/1.6/1.7			144		15	23	24					-	SPARE				
				FC-1.4/1.5/1.6/1.7	144			2		25	26			-			SPARE				
				FC-2.1 TO 2.5		240			15	27	28				-		SPARE				
				FC-2.1 TO 2.5			240	2		29	30					-	SPARE				
				FC-2.6/2.0	240				15	31	32			-			SPARE				
				FC-2.6/2.0		240		2		33	34				-		SPARE				
				FC-2.4/2.12			552		15	35	36					-	SPARE				
				FC-2.4/2.12	552			2		37	38			-			SPARE				
				FC-2.13/2.14		384			15	39	40				-		SPARE				
				FC-2.13/2.14			384	2		41	42					-	SPARE				
				TOTALS	11520	11448	11160							2240	1040	1720	TOTALS				

L.C.L. VOLT AMPS: . PHASE A . PHASE B . PHASE C .
TOTAL VOLT AMPS: 39128 PHASE A 13760 PHASE B 12488 PHASE C 12880
TOTAL AMPS: 109 PHASE A 115 PHASE B 104 PHASE C 107

PANEL NUMBER L5 VOLTAGE 120/208 PHASE 3 WIRE 4
SOURCE DB A.I.C. 42 KAIC
PANEL LOCATION ELECTRICAL ROOM BUS AMPERE RATING 225
■ NEMA 1 ■ COPPER BUSS ■ MAIN LUGS ONLY ■ SURFACE MOUNTING

LCL	MISC	RCPT	LITE	CIRCUIT DESCRIPTION	LOAD(VA) A	LOAD(VA) B	LOAD(VA) C	BRKR POLE	BRKR AMP	CKT	CKT	BRKR AMP	BRKR POLE	LOAD(VA) A	LOAD(VA) B	LOAD(VA) C	CIRCUIT DESCRIPTION	MISC	RCPT	LITE	LCL
				TBD	·			1	20	1	2	1	20	·			TBD				
				TBD		·				3	4				·		TBD				
				TBD			·			5	6					·	TBD				
				TBD	·					7	8			·			TBD				
				TBD		·				9	10				·		TBD				
				TBD			·			11	12					·	TBD				
				TBD	·					13	14			·			TBD				
				TBD		·				15	16				·		TBD				
				TBD			·			17	18					·	TBD				
				TBD	·					19	20			·			TBD				
				TBD		·				21	22				·		TBD				
				TBD			·			23	24					·	TBD				
				TBD	·					25	26			·			TBD				
				TBD		·				27	28				·		TBD				
				TBD			·			29	30					·	TBD				
				TBD	·					31	32			·			TBD				
				TBD		·				33	34				·		TBD				
				TBD			·			35	36					·	TBD				
				TBD	·					37	38			·			TBD				
				TBD		·				39	40				·		TBD				
				TBD			·			41	42					·	TBD				
				TOTALS	·	·	·							·	·	·	TOTALS				

L.C.L. VOLT AMPS: . PHASE A . PHASE B . PHASE C .
TOTAL VOLT AMPS: . PHASE A . PHASE B . PHASE C .
TOTAL AMPS: . PHASE A . PHASE B . PHASE C .

PANEL NUMBER L2 VOLTAGE 120/208 PHASE 3 WIRE 4
SOURCE DB A.I.C. 42 KAIC
PANEL LOCATION ELECTRICAL ROOM BUS AMPERE RATING 225
■ NEMA 1 ■ COPPER BUSS ■ MAIN LUGS ONLY ■ SURFACE MOUNTING

LCL	MISC	RCPT	LITE	CIRCUIT DESCRIPTION	LOAD(VA) A	LOAD(VA) B	LOAD(VA) C	BRKR POLE	BRKR AMP	CKT	CKT	BRKR AMP	BRKR POLE	LOAD(VA) A	LOAD(VA) B	LOAD(VA) C	CIRCUIT DESCRIPTION	MISC	RCPT	LITE	LCL
				TBD	·			1	20	1	2	1	20	·			TBD				
				TBD		·				3	4				·		TBD				
				TBD			·			5	6					·	TBD				
				TBD	·					7	8			·			TBD				
				TBD		·				9	10				·		TBD				
				TBD			·			11	12					·	TBD				
				TBD	·					13	14			·			TBD				
				TBD		·				15	16				·		TBD				
				TBD			·			17	18					·	TBD				
				TBD	·					19	20			·			TBD				
				TBD		·				21	22				·		TBD				
				TBD			·			23	24					·	TBD				
				TBD	·					25	26			·			TBD				
				TBD		·				27	28				·		TBD				
				TBD			·			29	30					·	TBD				
				TBD	·					31	32			·			TBD				
				TBD		·				33	34				·		TBD				
				TBD			·			35	36					·	TBD				
				TBD	·					37	38			·			TBD				
				TBD		·				39	40				·		TBD				
				TBD			·			41	42					·	TBD				
				TOTALS	·	·	·							·	·	·	TOTALS				

L.C.L. VOLT AMPS: . PHASE A . PHASE B . PHASE C .
TOTAL VOLT AMPS: . PHASE A . PHASE B . PHASE C .
TOTAL AMPS: . PHASE A . PHASE B . PHASE C .

PANEL NUMBER L4 VOLTAGE 120/208 PHASE 3 WIRE 4
SOURCE DB A.I.C. 42 KAIC
PANEL LOCATION ELECTRICAL ROOM BUS AMPERE RATING 225
■ NEMA 1 ■ COPPER BUSS ■ MAIN LUGS ONLY ■ SURFACE MOUNTING

LCL	MISC	RCPT	LITE	CIRCUIT DESCRIPTION	LOAD(VA) A	LOAD(VA) B	LOAD(VA) C	BRKR POLE	BRKR AMP	CKT	CKT	BRKR AMP	BRKR POLE	LOAD(VA) A	LOAD(VA) B	LOAD(VA) C	CIRCUIT DESCRIPTION	MISC	RCPT	LITE	LCL
				TBD	·			1	20	1	2	1	20	·			TBD				
				TBD		·				3	4				·		TBD				
				TBD			·			5	6					·	TBD				
				TBD	·					7	8			·			TBD				
				TBD		·				9	10				·		TBD				
				TBD			·			11	12					·	TBD				
				TBD	·					13	14			·			TBD				
				TBD		·				15	16				·		TBD				
				TBD			·			17	18					·	TBD				
				TBD	·					19	20			·			TBD				
				TBD		·				21	22				·		TBD				
				TBD			·			23	24					·	TBD				
				TBD	·					25	26			·			TBD				
				TBD		·				27	28				·		TBD				
				TBD			·			29	30					·	TBD				
				TBD	·					31	32			·			TBD				
				TBD		·				33	34				·		TBD				
				TBD			·			35	36					·	TBD				
				TBD	·					37	38			·			TBD				
				TBD		·				39	40				·		TBD				
				TBD			·			41	42					·	TBD				
				TOTALS	·	·	·							·	·	·	TOTALS				

L.C.L. VOLT AMPS: . PHASE A . PHASE B . PHASE C .
TOTAL VOLT AMPS: . PHASE A . PHASE B . PHASE C .
TOTAL AMPS: . PHASE A . PHASE B . PHASE C .

PANEL NUMBER L1 VOLTAGE 120/208 PHASE 3 WIRE 4
SOURCE DB A.I.C. 42 KAIC
PANEL LOCATION ELECTRICAL ROOM BUS AMPERE RATING 225
■ NEMA 1 ■ COPPER BUSS ■ MAIN LUGS ONLY ■ SURFACE MOUNTING

LCL	MISC	RCPT	LITE	CIRCUIT DESCRIPTION	LOAD(VA) A	LOAD(VA) B	LOAD(VA) C	BRKR POLE	BRKR AMP	CKT	CKT	BRKR AMP	BRKR POLE	LOAD(VA) A	LOAD(VA) B	LOAD(VA) C	CIRCUIT DESCRIPTION	MISC	RCPT	LITE	LCL
				TBD	·			1	20	1	2	1	20	·			TBD				
				TBD		·				3	4				·		TBD				
				TBD			·			5	6					·	TBD				
				TBD	·					7	8			·			TBD				
				TBD		·				9	10				·		TBD				
				TBD			·			11	12					·	TBD				
				TBD	·					13	14			·			TBD				
				TBD		·				15	16				·		TBD				
				TBD			·			17	18					·	TBD				
				TBD	·					19	20			·			TBD				
				TBD		·				21	22				·		TBD				
				TBD			·			23	24					·	TBD				
				TBD	·					25	26			·			TBD				
				TBD		·				27	28				·		TBD				
				TBD			·			29	30					·	TBD				
				TBD	·					31	32			·			TBD				
				TBD		·				33	34				·		TBD				
				TBD			·			35	36					·	TBD				
				TBD	·					37	38			·			TBD				
				TBD		·				39	40				·		TBD				
				TBD			·			41	42					·	TBD				
				TOTALS	·	·	·							·	·	·	TOTALS				

L.C.L. VOLT AMPS: . PHASE A . PHASE B . PHASE C .
TOTAL VOLT AMPS: . PHASE A . PHASE B . PHASE C .
TOTAL AMPS: . PHASE A . PHASE B . PHASE C .

PANEL NUMBER L3 VOLTAGE 120/208 PHASE 3 WIRE 4
SOURCE DB A.I.C. 42 KAIC
PANEL LOCATION ELECTRICAL ROOM BUS AMPERE RATING 225
■ NEMA 1 ■ COPPER BUSS ■ MAIN LUGS ONLY ■ SURFACE MOUNTING

LCL	MISC	RCPT	LITE	CIRCUIT DESCRIPTION	LOAD(VA) A	LOAD(VA) B	LOAD(VA) C	BRKR POLE	BRKR AMP	CKT	CKT	BRKR AMP	BRKR POLE	LOAD(VA) A	LOAD(VA) B	LOAD(VA) C	CIRCUIT DESCRIPTION	MISC	RCPT	LITE	LCL
				TBD	·			1	20	1	2	1	20	·			TBD				
				TBD		·				3	4				·		TBD				
				TBD			·			5	6					·	TBD				
				TBD	·					7	8			·			TBD				
				TBD		·				9	10				·		TBD				
				TBD			·			11	12					·	TBD				
				TBD	·					13	14			·			TBD				
				TBD		·				15	16				·		TBD				
				TBD			·			17	18					·	TBD				
				TBD	·					19	20			·			TBD				
				TBD		·				21	22				·		TBD				
				TBD			·			23	24					·	TBD				
				TBD	·					25	26			·			TBD				
				TBD		·				27	28				·		TBD				
				TBD			·			29	30					·	TBD				
				TBD	·					31	32			·			TBD				
				TBD		·				33	34				·		TBD				
				TBD			·			35	36					·	TBD				
				TBD	·					37	38			·			TBD				
				TBD		·				39	40				·		TBD				
				TBD			·			41	42					·	TBD				
				TOTALS	·	·	·							·	·	·	TOTALS				

L.C.L. VOLT AMPS: . PHASE A . PHASE B . PHASE C .
TOTAL VOLT AMPS: . PHASE A . PHASE B . PHASE C .
TOTAL AMPS: . PHASE A . PHASE B . PHASE C .

PANEL NUMBER L0 VOLTAGE 120/208 PHASE 3 WIRE 4
SOURCE DB A.I.C. 42 KAIC
PANEL LOCATION ELECTRICAL ROOM BUS AMPERE RATING 225
■ NEMA 1 ■ COPPER BUSS ■ MAIN LUGS ONLY ■ SURFACE MOUNTING

LCL	MISC	RCPT	LITE	CIRCUIT DESCRIPTION	LOAD(VA) A	LOAD(VA) B	LOAD(VA) C	BRKR POLE	BRKR AMP	CKT	CKT	BRKR AMP	BRKR POLE	LOAD(VA) A	LOAD(VA) B	LOAD(VA) C	CIRCUIT DESCRIPTION	MISC	RCPT	LITE	LCL
				TBD	·			1	20	1	2	1	20	·			TBD				
				TBD		·				3	4				·		TBD				
				TBD			·			5	6					·	TBD				
				TBD	·					7	8			·			TBD				
				TBD		·				9	10				·		TBD				
				TBD			·			11	12					·	TBD				
				TBD	·					13	14			·			TBD				
				TBD		·				15	16				·		TBD				
				TBD			·			17	18					·	TBD				
				TBD	·					19	20			·			TBD				
				TBD		·				21	22				·		TBD				
				TBD			·			23	24					·	TBD				
				TBD	·					25	26			·			TBD				
				TBD		·				27	28				·		TBD				
				TBD			·			29	30					·	TBD				
				TBD	·					31	32			·			TBD				
				TBD		·				33	34				·		TBD				
				TBD			·			35	36					·	TBD				
				TBD	·					37	38			·			TBD				
				TBD		·				39	40				·		TBD				
				TBD			·			41	42					·	TBD				
				TOTALS	·	·	·							·	·	·	TOTALS				

L.C.L. VOLT AMPS: . PHASE A . PHASE B . PHASE C .
TOTAL VOLT AMPS: . PHASE A . PHASE B . PHASE C .
TOTAL AMPS: . PHASE A . PHASE B . PHASE C .

CONNECT TO SITE LIGHTING VIA 2 CHANNEL ASTRONOMICAL TIME CLOCK & (2) 4 POLE 30A ELECTRICALLY HELD CONTACTORS IN AN ENCLOSURE

	L5	L2
EV	L4	L1
MP	L3	L0

PAUL MURDOCH ARCHITECTS

6310 SAN VICENTE BLVD. SUITE 400
LOS ANGELES, CA 90048
T. 310 358-0993

THE DRAWINGS AND SPECIFICATIONS AND IDEAS, DESIGNS, AND ARRANGEMENTS REPRESENTED THEREBY ARE AND SHALL REMAIN THE PROPERTY OF THE ARCHITECT, AND NO PART THEREOF SHALL BE COPIED, DISCLOSED TO OTHERS, OR USED IN CONNECTION WITH ANY WORK OR PROJECT OTHER THAN THE SPECIFIC PROJECT FOR WHICH THEY HAVE BEEN PREPARED AND DEVELOPED WITHOUT THE WRITTEN CONSENT OF THE ARCHITECT. VISUAL CONTACT WITH THESE DRAWINGS OR SPECIFICATIONS SHALL CONSTITUTE CONCLUSIVE EVIDENCE OF ACCEPTANCE OF THESE RESTRICTIONS. WRITTEN DIMENSIONS ON THESE DRAWINGS SHALL HAVE PRECEDENCE OVER SCALED DIMENSIONS. CONTRACTORS SHALL VERIFY AND BE RESPONSIBLE FOR ALL DIMENSIONS AND CONDITIONS ON THE JOB AND THIS OFFICE MUST BE NOTIFIED OF ANY VARIATIONS FROM THE DIMENSIONS AND CONDITIONS SHOWN BY THESE DRAWINGS. SHOP DETAILS MUST BE SUBMITTED TO THIS OFFICE FOR REVIEW BEFORE PROCEEDING WITH FABRICATION.

LUCCI & ASSOCIATES INC.
CONSULTING ELECTRICAL ENGINEERS
3251 CORTE MALPASO, #511
CAMARILLO, CA 93012-8094
(805) 389-6520 FAX (805) 389-6519

LUCCI & ASSOCIATES, INC. reserve their commonlaw copyright and other property rights in these plans. These plans and drawings are not to be reproduced, changed, or copied in any form or manner whatsoever without first obtaining the expressed written permission and consent of LUCCI & ASSOC. INC nor are they to be assigned to any third party without obtaining said written permission and consent.

NO. DATE REVISION

allcove
BEACH CITIES HEALTH DISTRICT

100% PRELIMINARY DESIGN SUBMITTAL

PMA PROJECT NO. 23-727

DRAWING TITLE
PANEL SCHEDULES

SCALE AS NOTED
DATE 02-28-2024
DRAWN D.S./L.K. CHECKED K.L.
SHEET NO. E201

Copyright Lucci and Associates Consulting Electrical Engineers. Deviations from this drawing will not be made without their expressed written permission.

L.A.I.# 23-727 PAPER SIZE 42"x30"

Drafter:CM01 Paper Size: 12.9
Drawing:G:\23\727\EL\Sheets\23-727 E201.dwg
Feb 27, 2024, 3:34pm
Attached XREFS:
XREF:G:\23\727\EL\Xrefs\23-727 TB.dwg
Drafter: CM01; G:\23\727\EL\Sheets\23-727 E201.dwg; DATE: FEB 26, 2024 TIME: 3:33 PM

DRAFTER: CM01 DRAWING FILENAME: 23-727 E300 PATHNAME: G:\23\727\EL\Sheets DATE: 27 February 2024 TIME: 3:34 pm

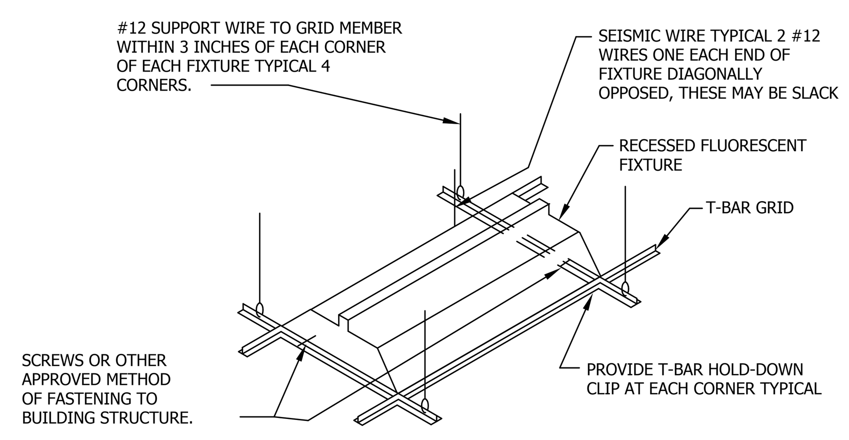

ALL LIGHTING FIXTURES SHALL BE SECURELY ATTACHED TO THE SUSPENDED CEILING SYSTEM. THE ATTACHMENT DEVICE SHALL HAVE A CAPACITY OF 100 PERCENT OF THE LIGHT FIXTURE WEIGHT ACTING IN ANY DIRECTION.

WHEN INTERMEDIATE SYSTEMS ARE USED, #12 GAGE HANGERS SHALL BE ATTACHED TO THE GRID MEMBERS WITHIN 3 INCHES OF EACH CORNER OF EACH FIXTURE. TANDEM FIXTURES MAY UTILIZE COMM0N WIRES.

WHERE HEAVY DUTY SYSTEMS ARE USED, SUPPLEMENTAL HANGERS ARE NOT REQUIRED IF A 48 INCH MODULAR HANGER PATTERN IS FOLLOWED. WHEN CROSS RUNNERS ARE USED WITHOUT SUPPLEMENTAL HANGERS TO SUPPORT LIGHTING FIXTURES, THESE CROSS RUNNERS MUST PROVIDE THE SAME CARRYING CAPACITY AS THE MAIN RUNNER.

LIGHTING FIXTURES WEIGHING 56 POUNDS OR MORE SHALL BE SUPPORTED DIRECTLY FROM THE STRUCTURE ABOVE BY APPROVED HANGERS.

PENDANT MOUNTED LIGHTING FIXTURES SHALL BE SUPPORTED DIRECTLY FROM THE STRUCTURE ABOVE USING 9 GAGE WIRE OR APPROVED ALTERNATE.

NOTE: ALL ELECTRICAL EQUIPMENT, CONDUIT, FIXTURES, ETC. SHALL BE SECURELY FASTENED TO THE BUILDING STRUCTURE AS PER CITY ORDINANCES.

FIXTURE SCHEDULE NOTES:

1. FIXTURES TYPE IN CONTACT WITH INSULATION SHALL HAVE U.L. LISTED THERMAL BARRIER.
2. CONTRACTOR SHALL VERIFY THE TYPE OF CEILING BEFORE ORDERING NEW FIXTURES. CONTRACTOR IS FULLY RESPONSIBLE TO PROVIDE ALL MOUNTING BRACKETS TO FIT CEILING CONDITIONS AT NO EXTRA CHARGE TO THE OWNER.
3. REFER TO ARCHITECTURAL REFLECTED CEILING PLAN FOR EXACT LOCATION OF LIGHTING FIXTURES.
4. SEE ARCHITECTURAL PLANS FOR EXACT DIMENSIONS, CEILING CONFIGURATION AND LIGHTING PLACEMENT.
5. XX — FIXTURE TYPE; XX — QUANTITY

T-BAR LAYIN FIXTURE DETAIL
SCALE: NONE

1 - E300

LIGHTING FIXTURE SCHEDULE (OFFICE BUILDING)

TAG	SYMBOL	WATT	DESCRIPTION	LAMP - TYPE AND QUANTITY	MOUNTING	MANUFACTURER AND MODEL NUMBER	REMARKS
F0 -		15	6" SHOWER DOWNLIGHT	LED	RECESSED	GOTHAM EV06RSH-35-25-DFF-SOL-120	-
F1 -		41	2' X 4' LAY-IN FLAT PANEL	LED	T-BAR	LITHONIA # EPANL 2x4 4000LM 80 35K MIN1 EZT MVOLT NLIGHT	PROVIDE WITH SURFACE MOUNT KIT WHEN SURFACE MOUNTED
F2 -		36	12" DECORATIVE DIRECT	LED	RECESSED	MARK MAGELLAN MRGLR 12IN FL/TG 90CKI 2000LM - MIN1-FLL-MVOLT-FLT-WHTT-NLIGHT	
F3 -		20	6" APERTURE - LED DOWNLIGHT	LED	RECESSED	GOTHAM EVO6 35K/30 6AR MVOLT-MD-LS EZ1 NLT - TRW	-
F4 -		30	6" SQUARE	LED	RECESSED	LITHONIA EVO 6Q 35K/35 95-6AR-MD 8 LSS MVOLT - MIN1 - NLIGHT - NCH - F - AR - LSS - F	-
F5 -		20	4'-0" VAPOR TYPE STRIP	LED	SURFACE	LITHONIA CSVT L48 6000LM MVOLT 80CRI	PROVIDE WITH SWITCH PER ELEVATOR CODE
F6 -		10W/FT	SURFACE DIRECT WALL MOUNTED 2" SLOT (WALL GRAZE)	LED	WALL SURFACE	MARK-S2SD-LCB-LENGTH PER PLAN - 90CRI - 35K - 800 LMF - WG - SCT - MIN1 - FLL - 120 - WHTT - NLIGHT	-
F7 -		.5 / FT	36" UNDER-COUNTER SURFACE MOUNTED LED COMPACT FIXTURE	LED	SURFACE	KELVIX - UC32 - 3040 010 120V/277 WH - (40" OR 22")	ELECTRONIC 0-10V DIMMING
F8 -		10W/FT	SURFACE MOUNTED WALL 4" SLOT (WALL GRAZE)	LED	WALL	MARK-S4SD-LCB-LENGTH PER PLAN - 90CRI - 35K - 800 LMF - WG - SCT - MIN1 - FLL - 120 - WHTT - NLIGHT	
F9 -		10W/FT	SLOT 2 RECESSED LINEAR - WALL WASH	LED	RECESSED	MARK - SL2L - SL2L - LOP - XFT - FLP - FL/TG - 90CRI - 35K - 800LMF - WW - MIN1 - 120 - NLIGHT	-
F10 -		15W/FT	4" RECESSED LINEAR	LED	RECESSED	MARK - SL4L - LOP - X - FLP - FL/TG - 90CRI - 35K - 1000LMF - MIN1 - 120 - NLIGHT	
F11 -		2	EXIT SIGN EDGE-LIT W/ 6" HIGH LETTERS	LED	WALL	LITHONIA # EDG - 1/2 - G - X2	ARROW AS REQUIRED PER PATH OF EGRESS, (WITH TWO SOURCES, NORMAL & EMERGENCY)
F17 -		43	48" LED STRIP	LED	PENDANT 8'-6"	LITHONIA CSS - L48AL - 03 - MVOLT - SWW3 - 80CRI	
F17A -		23	24" LED STRIP	LED	WALL ABOVE DOOR	LITHONIA CSS - L24 - AL03 - MVOLT - SWW3 - 80CRI	
F18 -		15	11" SURFACE MOUNT	LED	SURFACE	JUNO - JSF - IIM - SWWS - 90CRI - 120FRPC - WH	
F20 -		15W	SURFACE MOUNTED EXTERIOR	LED	SURFACE	LITHONIA WDG E2 LED P2 - 35K - 90CRI VW - MVOLT - SRM - PIR - 1FC3V	-
OD -		25W	15" SQUARE OUTDOOR	LED	SURFACE	KENALL MS 15 CL - PP - MW - 25L35K - 120 -	
S1 -		.	SIGNAGE LIGHT	LED	SURFACE	ECOSENSE TROV L50-E-48-12-40-80-MULT-9X59 (24 FOOT OF LINEAR WALL LENGTH)	MOUNTED 9'-6" A.F.G.
SL -		8	STEP LIGHT	LED	RECESSED	HYDREL HSL13-6INCH-LED-35K-MVOLT-L-MIN5-BB-SGW	
S1 -		55W	POLE LIGHT 18 FT (VERIFY HEIGHT WITH CITY REQUIREMENTS)	LED	POLE (INCLUDED)	LITHONIA DSX1 LED - P4 - 35K - 80CRI - T3M - 120 - PIRPE	PROVIDE WITH ROUND STEEL POLE SEE E601 FOR POLE BASE DETAIL
WW -		20W	WALL WASH 6"	LED	RECESSED	LITHONIA EV06WW - 25LM - 35K - 95CRI - 120 - MIN1 - NLIGHT - NCH - LW - WR - LSS - F	

CONTROL SCHEDULE

TAG	DESCRIPTION
BG1	BG1 NBRG 8 KIT nLight Bridge, Kit
BG2	BG2 NBRG 8 KIT nLight Bridge, Kit
BG3	BG3 NBRG 8 KIT nLight Bridge, Kit
BG4	BG4 NBRG 8 KIT nLight Bridge, Kit
BG5	BG5 NBRG 8 KIT nLight Bridge, Kit
BG6	BG6 NBRG 8 KIT nLight Bridge, Kit
BG7	BG7 NBRG 8 KIT nLight Bridge, Kit
BG8	BG8 NBRG 8 KIT nLight Bridge, Kit
BG9	BG9 NBRG 8 KIT nLight Bridge, Kit
DE1	DE1 NPP16 D ER EFP Power/Relay Pack, Occupancy Controlled Dimming, UL924 Emergency Operation, External Fault Protection.
DP1	DP1 NPP16 D EFP Power/Relay Pack, Occupancy Controlled Dimming, External Fault Protection.
OS1	OS1 NCM PDT 9 Low Voltage Ceiling Mount Sensor, Passive Dual Technology, Small Motion / Standard Range 360° Lens
OS2	OS2 NCM PDT 10 Low Voltage Ceiling Mount Sensor, Passive Dual Technology, Large Motion / Extended Range 360° Lens
OS3	OS3 NCM 9 Low Voltage Ceiling Mount Sensor, Small Motion / Standard Range 360° lens
OS4	OS4 NCM 10 Low Voltage Ceiling Mount Sensor, Large Motion / Extended Range 360° lens
PC1	PC1 NCM ADCX Low Voltage Ceiling Mount Sensor, Photocontrol w/ Auto Dimming; no wires
PO1	PO1 NCM 9 ADCX Low Voltage Ceiling Mount Sensor, Small Motion / Standard Range 360° Lens, Photocontrol w/ Auto Dimming No Wires
PO2	PO2 NCM 10 ADCX Low Voltage Ceiling Mount Sensor, Large Motion / Extended Range 360° Lens, Photocontrol w/ Auto Dimming No Wires
SC1	SC1 NECY MVOLT ADR ENC GFXK nLight Eclypse, 24 VAC
SO1	SO1 NWSX PDT LV DX XX Wall Switch Sensor, Passive Dual Technology, Low Voltage, Raise/Lower Dimming Without Wires
SO2	SO2 WSX D XX Wall Switch Sensor, Occupancy Controlled Dimming
SW1	SW1 NPODM DX XX Low voltage Push-Button Wallpod, Raise/Lower Dimming Without Wires
SW2	SW2 NPODM 2P DX XX Low Voltage Push-Button Wallpod, 2-Pole, Raise/Lower Dimming Without Wires
SW4	SW4 NPODM 4P DX XX Low Voltage Push-Button Wallpod, 4-Pole, Raise/Lower Dimming Without Wires
PP1	PP1 WPP16 Power Pack For 120VAC and 277VAC Switching.

DEVICE/CONTROL LEGEND

TAG	DESCRIPTION
C5	CAT 5 CABLE
$V	VACANCY SENSOR SWITCH
$OS	OCCUPANCY SENSOR SENSOR SWITCH - LINE VOLTAGE DUAL LEVEL WSD PDT 2P
$OL	nLIGHT WALL SWITCH DECORA OCCUPANCY SENSOR DUAL TECHNOLOGY (PDT) LOW VOLTAGE ON/OFF/RAISE/LOWER CONTROL #nWSXPDTLVDXWH
GFX	nPOD GFX GRAPHIC WALLPOD
D1	nLIGHT ON/OFF RAISE LOWER #nPODMDXWH
D2	nLIGHT DIMMER 2 CHANNEL ON/OFF TOGGLE #nPODM2PDXWH
D4	nLIGHT DIMMER 4 CHANNEL TOGGLE WITH DIMMING #nPODM4PDXWH
RP	nLIGHT RELAY PACK #nPP16
RPD	nLIGHT RELAY PACK WITH 0-10V DIMMING CONTROL #nPP16D
RPL	nLIGHT RELAY PLUG LOAD CONTROL #nPP16PLT24 (USED TO SWITCH CONTROLLED OUTLETS)
OS	nLIGHT STANDARD RANGE 360° SENSOR CEILING MOUNT, LOW VOLTAGE DUAL TECHNOLOGY #nCMPDT9
OS LV	LINE VOLTAGE OCCUPANCY SENSOR CEILING MOUNT 120/277V SENSOR SWITCH
OSP	nLIGHT STANDARD RANGE 360° SENSOR CEILING MOUNT, LOW VOLTAGE DUAL TECHNOLOGY (PDT) PHOTOCELL WITH DIMMING (NO WIRES) #nCMPDT9ADCX
AOSP	nLIGHT AUTOMATIC DIMMING CONTROL PHOTOCELL, CEILING MOUNT, LOW VOLTAGE DUAL ZONE #nCMADCXDZ
AAOSP	nLIGHT AUTOMATIC DIMMING CONTROL PHOTOCELL, CEILING MOUNT, LOW VOLTAGE DUAL ZONE WITH OCCUPANCY SENSOR nCMPDT10ADCXDZ
PP2	POWER PACK, 2 LEVEL, 120/277VAC DUAL VOLTAGE
PC	PHOTOCELL 120/277VAC
RPT	nLIGHT TRACK MAGNETIC DIMMER PCDMLV NSP5
CDP	nLIGHT CONTROLLER DIMMER PACK #nPS80EZ
PCD	nLIGHT INCANDESCENT PHASE CONTROLLED DIMMING

PAUL MURDOCH ARCHITECTS
6310 SAN VICENTE BLVD. SUITE 400
LOS ANGELES, CA 90048
T. 310 358-0993

THE DRAWINGS AND SPECIFICATIONS AND IDEAS, DESIGNS, AND ARRANGEMENTS REPRESENTED THEREBY ARE AND SHALL REMAIN THE PROPERTY OF THE ARCHITECT, AND NO PART THEREOF SHALL BE COPIED, DISCLOSED TO OTHERS, OR USED IN CONNECTION WITH ANY WORK OR PROJECT OTHER THAN THE SPECIFIC PROJECT FOR WHICH THEY HAVE BEEN PREPARED AND DEVELOPED WITHOUT THE WRITTEN CONSENT OF THE ARCHITECT. VISUAL CONTACT WITH THESE DRAWINGS OR SPECIFICATIONS SHALL CONSTITUTE CONCLUSIVE EVIDENCE OF ACCEPTANCE OF THESE RESTRICTIONS. WRITTEN DIMENSIONS ON THESE DRAWINGS SHALL HAVE PRECEDENCE OVER SCALED DIMENSIONS. CONTRACTORS SHALL VERIFY AND BE RESPONSIBLE FOR ALL DIMENSIONS AND CONDITIONS ON THE JOB AND THIS OFFICE MUST BE NOTIFIED OF ANY VARIATIONS FROM THE DIMENSIONS AND CONDITIONS SHOWN BY THESE DRAWINGS. SHOP DETAILS MUST BE SUBMITTED TO THIS OFFICE FOR REVIEW BEFORE PROCEEDING WITH FABRICATION.

LUCCI & ASSOCIATES INC.
CONSULTING ELECTRICAL ENGINEERS
3251 CORTE MALPASO, #511
CAMARILLO, CA 93012-8094
(805) 389-6520 FAX (805) 389-6519

LUCCI & ASSOCIATES, INC. reserve their commonlaw copyright and other property rights in these plans. These plans and drawings are not to be reproduced, changed, or copied in any form or manner whatsoever without first obtaining the expressed written permission and consent of LUCCI & ASSOC. INC nor are they to be assigned to any third party without obtaining said written permission and consent.

NO. DATE REVISION

allcove
BEACH CITIES
HEALTH DISTRICT

100% PRELIMINARY
DESIGN SUBMITTAL

PMA PROJECT NO. 23-727
DRAWING TITLE: LIGHTING AND CONTROL SCHEDULE
SCALE: AS NOTED
DATE: 02-28-2024
DRAWN: D.S./L.K. CHECKED: K.L.
SHEET NO. E300

Copyright Lucci and Associates Consulting Electrical Engineers. Deviations from this drawing will not be made without their expressed written permission.

Drafter:CM01 Paper Size: 12,9
Drawing:G:\23\727\EL\Sheets\23-727 E300.dwg
Feb 27, 2024, 3:34pm
Attached XREFS:
XREF:G:\23\727\EL\Xrefs\23-727 TB.dwg
Drafter: CM01: G:\23\727\EL\Sheets\23-727 E300.dwg; DATE: FEB 27, 2024, TIME: 3:05 PM

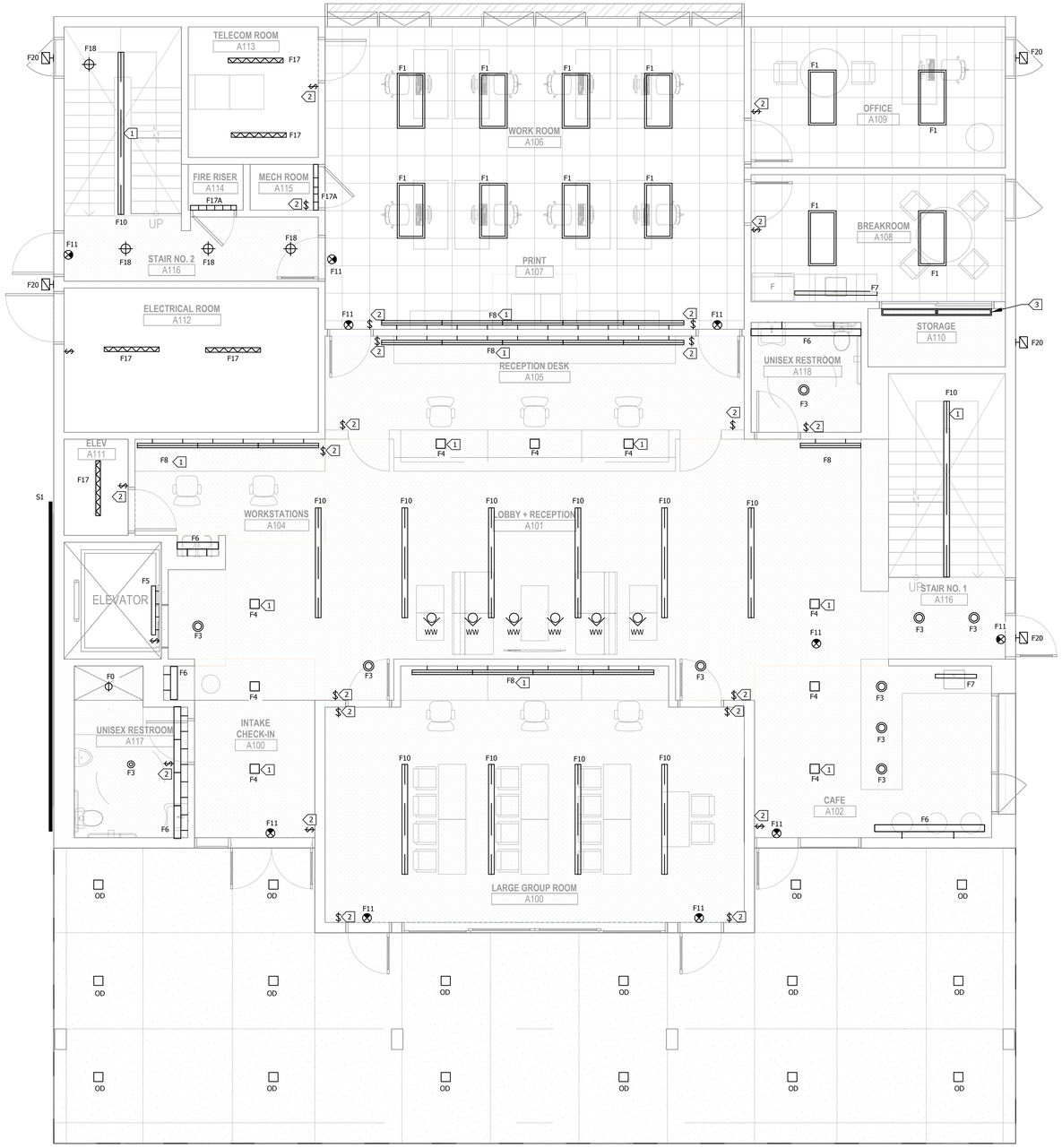

SCALE: 1/4"=1'-0"

0 2' 4' 8'

FIRST LELVEL LIGHTING PLAN

1 / E301

SCALE: 1/4"=1'-0"

N

SHEET NOTES:

1. CONTRACTOR SHALL VERIFY LOCATION, CEILING TYPE, TRIM, AND REQUIREMENTS OF ALL LIGHT FIXTURES AND CONTROL PRIOR TO BID PROPOSAL, ROUGH-IN, AND FINISH INSTALLATION.
2. CONTRACTOR SHALL FURNISH AND INSTALL PULL BOXES AS REQUIRED TO INSTALL CONDUCTORS PER CONDUCTOR MANUFACTURERS RECOMMENDATIONS, PER THE NATIONAL ELECTRICAL CODE AND PER LOCAL AUTHORITIES HAVING JURISDICTION.
3. 3/4" CONDUIT MINIMUM UNLESS OTHERWISE NOTED.
4. VERIFY LOCATION OF ALL DEVICES ON ARCHITECTURAL PLANS.
5. MAINTAIN A MAXIMUM 2% VOLTAGE DROP ON ALL LIGHTING HOMERUNS.
6. ALL EXIT SIGNS ARE +12" TO CENTER LINE OF FIXTURE ABOVE DOOR FRAME UNLESS OTHERWISE NOTED.
7. CONTRACTOR SHALL PROVIDE ALL BACKING, BRACKETS, SUPPORTS, AND MOUNTING HARDWARE NECESSARY TO PROPERLY INSTALL LIGHTING FIXTURES.
8. VERIFY THE EXACT ROUTING OF ALL EXPOSED CONDUIT WITH OWNER PRIOR TO INSTALLATION.
9. COORDINATE WORK WITH OTHER TRADES. OBTAIN ALL DRAWINGS THAT WILL REQUIRE COORDINATION AND PROVIDE ALL ELECTRICAL CONNECTIONS, DEVICES, AND WIRING REQUIRED WHETHER SHOWN ON ELECTRICAL DRAWINGS OR NOT.

KEY NOTES:

1. ON LIGHTING CONTROL FOR NIGHT LIGHT.
2. RECOMMENDED LIGHTING CONTROL STATIONS, ALL AREAS SHALL HAVE DIMMING CONTROL TO 1%.
3. PROVIDE MICRO-SWITCH FOR F9 ON DOOR

PROVIDE CA TITLE 24 LIGHTING CONTROLS, US nLIGHT FOR EOR APPROVED CONTROL SYSTEM.

PROVIDE PHOTOMETRICS FOR NORMAL & EMERGENCY LIGHTING (1 FOOT CANDLE MINIMUM) AT FINISHED FLOOR ON PATH OF EGRESS PER CBC & LIFE SAFETY CODE.

CONTRACTOR SHALL CONNECT EM LIGHTING TO LIGHTING FIXTURES PER PHOTOMETRIC STUDY & PER CBC, NEC & PREVAILING CODES.

CONTRACTOR SHALL PROVIDE OCCUPANCY SENSORS, DAYLIGHT HARVESTING, CONTROL, DIMMING, ECT PER 2022 CA TITLE 24 & OBTAIN COMMISSION FOR LIGHTING PER CA TITLE 24

PAUL MURDOCH ARCHITECTS

6310 SAN VICENTE BLVD. SUITE 400
LOS ANGELES, CA 90048
T. 310 358-0993

THE DRAWINGS AND SPECIFICATIONS AND IDEAS, DESIGNS, AND ARRANGEMENTS REPRESENTED THEREBY ARE AND SHALL REMAIN THE PROPERTY OF THE ARCHITECT AND NO PART THEREOF SHALL BE COPIED, DISCLOSED TO OTHERS, OR USED IN CONNECTION WITH ANY WORK OR PROJECT OTHER THAN THE SPECIFIC PROJECT FOR WHICH THEY HAVE BEEN PREPARED AND DEVELOPED WITHOUT THE WRITTEN CONSENT OF THE ARCHITECT. VISUAL CONTACT WITH THESE DRAWINGS OR SPECIFICATIONS SHALL CONSTITUTE CONCLUSIVE EVIDENCE OF ACCEPTANCE OF THESE RESTRICTIONS. WRITTEN DIMENSIONS ON THESE DRAWINGS SHALL HAVE PRECEDENCE OVER SCALED DIMENSIONS. CONTRACTORS SHALL VERIFY AND BE RESPONSIBLE FOR ALL DIMENSIONS AND CONDITIONS ON THE JOB AND THIS OFFICE MUST BE NOTIFIED OF ANY VARIATIONS FROM THE DIMENSIONS AND CONDITIONS SHOWN BY THESE DRAWINGS. SHOP DETAILS MUST BE SUBMITTED TO THIS OFFICE FOR REVIEW BEFORE PROCEEDING WITH FABRICATION.

LUCCI & ASSOCIATES
CONSULTING ELECTRICAL ENGINEERS
3251 CORTE MALPASO, #511
CAMARILLO, CA 93012-8094
(805) 389-6320 FAX (805) 389-6519

LUCCI & ASSOCIATES, INC. reserve their commonlaw copyright and other property rights in these plans. These plans are not to be reproduced, changed, or copied in any form or manner whatsoever without first obtaining the expressed written permission of Lucci and Associates. In the event of unauthorized reuse by any third party without obtaining said written permission and consent,

NO.	DATE	REVISION

allcove
BEACH CITIES HEALTH DISTRICT

100% PRELIMINARY DESIGN SUBMITTAL

PMA PROJECT NO.
23-727

DRAWING TITLE
FIRST LEVEL LIGHTING PLAN

SCALE
AS NOTED

DATE
02-28-2024

DRAWN D.S./L.K. CHECKED K.L.

SHEET NO.
E301

Copyright Lucci and Associates Consulting Electrical Engineers. Deviations from this drawing will not be made without their expressed written permission.

L.A.I.# 23-727 PAPER SIZE 42"x30"

DRAFTER: CM01 DRAWING FILENAME: 23-727 E301 PATHNAME: G:\23\727\EL\Sheets DATE: 27 February 2024 TIME: 3:34 pm

Drafter:CM01 - Paper Size: 1:1.0
Date: 2/27/2024 - 3:34 PM
Plot by: DARIO SOTO
XREF:G:\23\727\EL\xrefs\23-727-TB.dwg
XREF:G:\23\727\EL\xrefs\23-727-FP-Base.dwg
XREF:G:\23\727\EL\xrefs\23-727-FP-Elec.dwg
XREF:G:\2019\PMA\MODELS\B-05-PMA-FP-1ST.dwg

Drafter: CM01 : G:\23\727\EL\Sheets\23-727 E301.dwg: DATE: FEB 27, 2024 TIME: 3:30 PM

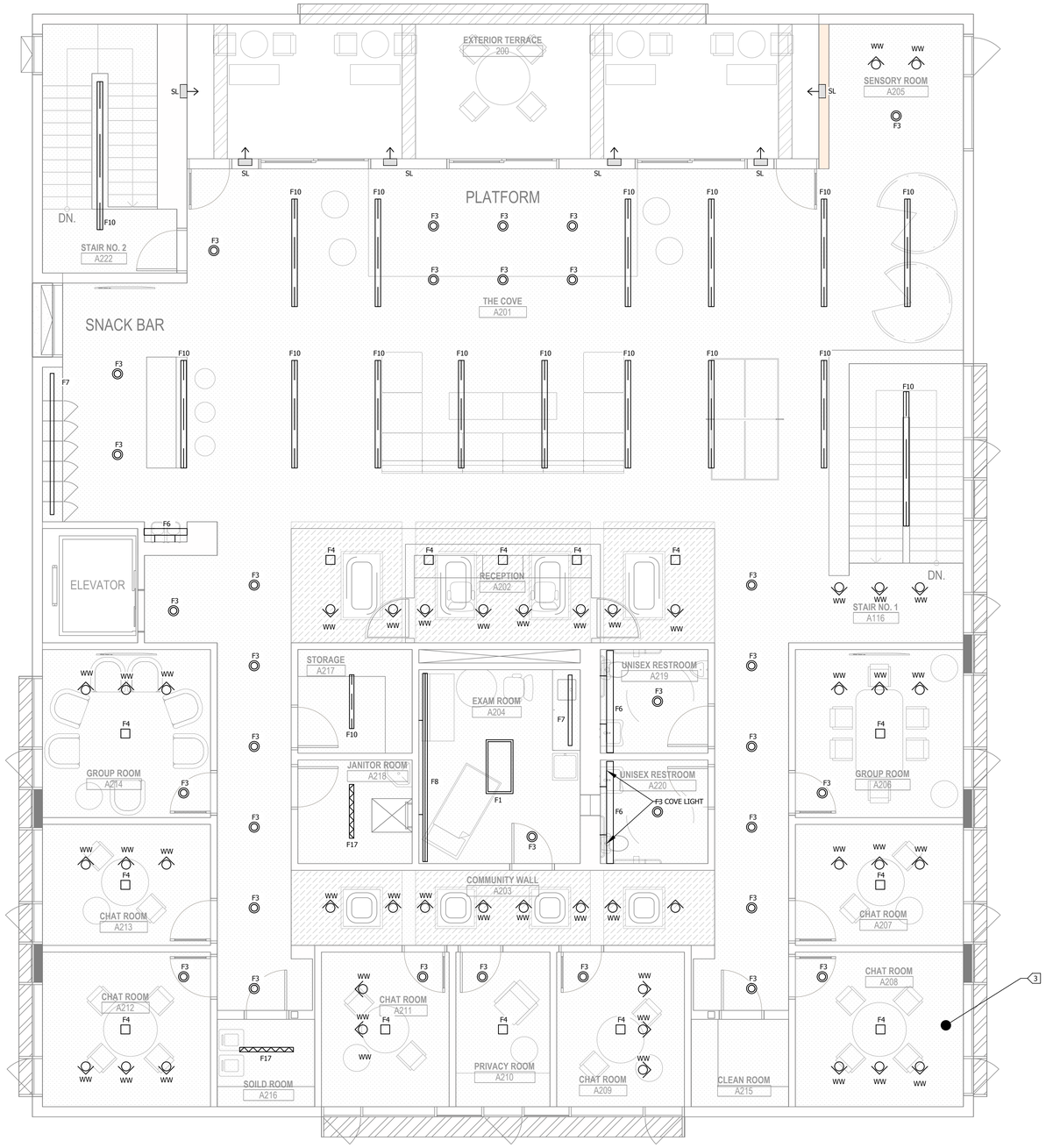

SCALE: 1/4"=1'-0"

0 2' 4' 8'

SECOND LEVEL LIGHTING PLAN

SCALE: 1/4"=1'-0"

1 - E302

N

SHEET NOTES:

1. CONTRACTOR SHALL VERIFY LOCATION, CEILING TYPE, TRIM, AND REQUIREMENTS OF ALL LIGHT FIXTURES AND CONTROL PRIOR TO BID PROPOSAL, ROUGH-IN, AND FINISH INSTALLATION.
2. CONTRACTOR SHALL FURNISH AND INSTALL PULL BOXES AS REQUIRED TO INSTALL CONDUCTORS PER CONDUCTOR MANUFACTURERS RECOMMENDATIONS, PER THE NATIONAL ELECTRICAL CODE AND PER LOCAL AUTHORITIES HAVING JURISDICTION.
3. 3/4" CONDUIT MINIMUM UNLESS OTHERWISE NOTED.
4. VERIFY LOCATION OF ALL DEVICES ON ARCHITECTURAL PLANS.
5. MAINTAIN A MAXIMUM 2% VOLTAGE DROP ON ALL LIGHTING HOMERUNS.
6. ALL EXIT SIGNS ARE +12" TO CENTER LINE OF FIXTURE ABOVE DOOR FRAME UNLESS OTHERWISE NOTED.
7. CONTRACTOR SHALL PROVIDE ALL BACKING, BRACKETS, SUPPORTS, AND MOUNTING HARDWARE NECESSARY TO PROPERLY INSTALL LIGHTING FIXTURES.
8. VERIFY THE EXACT ROUTING OF ALL EXPOSED CONDUIT WITH OWNER PRIOR TO INSTALLATION.
9. COORDINATE WORK WITH OTHER TRADES. OBTAIN ALL DRAWINGS THAT WILL REQUIRE COORDINATION AND PROVIDE ALL ELECTRICAL CONNECTIONS, DEVICES, AND WIRING REQUIRED WHETHER SHOWN ON ELECTRICAL DRAWINGS OR NOT.

KEY NOTES:

1. ON LIGHTING CONTROL FOR NIGHT LIGHT.
2. RECOMMENDED LIGHTING CONTROL STATIONS, ALL AREAS SHALL HAVE DIMMING CONTROL TO 1%.
3. TYPICAL LIGHTING CONTROL ON BOTH FLOORS FOR ALL SIMILAR WOULD HAVE 3 DIMMER CONTROL WITH WW, F4 & F3 CONTROLLED INDEPENDENTLY.

PROVIDE CA TITLE 24 LIGHTING CONTROLS, US nLIGHT FOR EOR APPROVED CONTROL SYSTEM.

PROVIDE PHOTOMETRICS FOR NORMAL & EMERGENCY LIGHTING (1 FOOT CANDLE MINIMUM) AT FINISHED FLOOR ON PATH OF EGRESS PER CBC & LIFE SAFETY CODE.

CONTRACTOR SHALL CONNECT EM LIGHTING TO LIGHTING FIXTURES PER PHOTOMETRIC STUDY & PER CBC, NEC & PREVAILING CODES.

CONTRACTOR SHALL PROVIDE OCCUPANCY SENSORS, DAYLIGHT HARVESTING, CONTROL, DIMMING, ECT PER 2022 CA TITLE 24 & OBTAIN COMMISSION FOR LIGHTING PER CA TITLE 24

PAUL MURDOCH ARCHITECTS

6310 SAN VICENTE BLVD. SUITE 400
LOS ANGELES, CA 90048
T. 310 358-0993

THE DRAWINGS AND SPECIFICATIONS AND IDEAS, DESIGNS, AND ARRANGEMENTS REPRESENTED THEREBY ARE AND SHALL REMAIN THE PROPERTY OF THE ARCHITECT AND NO PART THEREOF SHALL BE COPIED, DISCLOSED TO OTHERS, OR USED IN CONNECTION WITH ANY WORK OR PROJECT OTHER THAN THE SPECIFIC PROJECT FOR WHICH THEY HAVE BEEN PREPARED AND DEVELOPED WITHOUT THE WRITTEN CONSENT OF THE ARCHITECT. VISUAL CONTACT WITH THESE DRAWINGS OR SPECIFICATIONS SHALL CONSTITUTE CONCLUSIVE EVIDENCE OF ACCEPTANCE OF THESE RESTRICTIONS. WRITTEN DIMENSIONS ON THESE DRAWINGS SHALL HAVE PRECEDENCE OVER SCALED DIMENSIONS. CONTRACTORS SHALL VERIFY AND BE RESPONSIBLE FOR ALL DIMENSIONS AND CONDITIONS ON THE JOB AND THIS OFFICE MUST BE NOTIFIED OF ANY VARIATIONS FROM THE DIMENSIONS AND CONDITIONS SHOWN BY THESE DRAWINGS. SHOP DETAILS MUST BE SUBMITTED TO THIS OFFICE FOR REVIEW BEFORE PROCEEDING WITH FABRICATION.

LUCCI & ASSOCIATES
CONSULTING ELECTRICAL ENGINEERS
3251 CORTE MALPASO, #611
CAMARILLO, CA 93012-8094
(805) 389-6320 FAX (805) 389-6519

LUCCI & ASSOCIATES, INC. reserve their commonlaw copyright and other property rights in these plans, specifications, ideas, designs and arrangements. These plans, specifications, designs, ideas, designs and arrangements are not to be reproduced, changed, or copied in any form or manner whatsoever, nor are they to be assigned to any third party, without first obtaining the expressed written permission and consent of LUCCI & ASSOCIATES, INC. In the event of unauthorized reuse of these plans by a third party, the third party agrees to hold LUCCI & ASSOCIATES, INC. harmless for any damages resulting therefrom.

NO.	DATE	REVISION

allcove
BEACH CITIES HEALTH DISTRICT

100% PRELIMINARY DESIGN SUBMITTAL

PMA PROJECT NO.
23-727

DRAWING TITLE
SECOND LEVEL LIGHTING PLAN

SCALE
AS NOTED

DATE
02-28-2024

DRAWN D.S./L.K. CHECKED K.L.

SHEET NO.
E302

Copyright Lucci and Associates Consulting Electrical Engineers. Deviations from this drawing will not be made without their expressed written permission.

L.A.I.# 23-727 PAPER SIZE 42"x30"

DRAFTER: CM01 DRAWING FILENAME: 23-727 E302 PATHNAME: G:\23\727\EL\Sheets DATE: 27 February 2024 TIME: 3:34 pm

Drafter:CM01 Paper Size: 1x1
Date Plotted: Feb 27, 2024 Time Plotted:3:05 PM
File:23-727 E302.dwg
Layout:E302 Tab:Model
XREF:G:\23\727\Xrefs\23-727 TB.dwg
XREF:G:\23\727\Xrefs\23-727 E302 WP-TMB.dwg
XREF:G:\23\727\Xrefs\23-727 E302 WP-TMB-Wall.dwg
XREF:G:\23\727\Xrefs\23-727 E302 WP-TMB-Ceiling.dwg

Drafter: CM01 : K:\Drive\23\727\EL\Sheets\23-727 E302.dwg: DATE: FEB 27, 2024 TIME: 3:05 PM

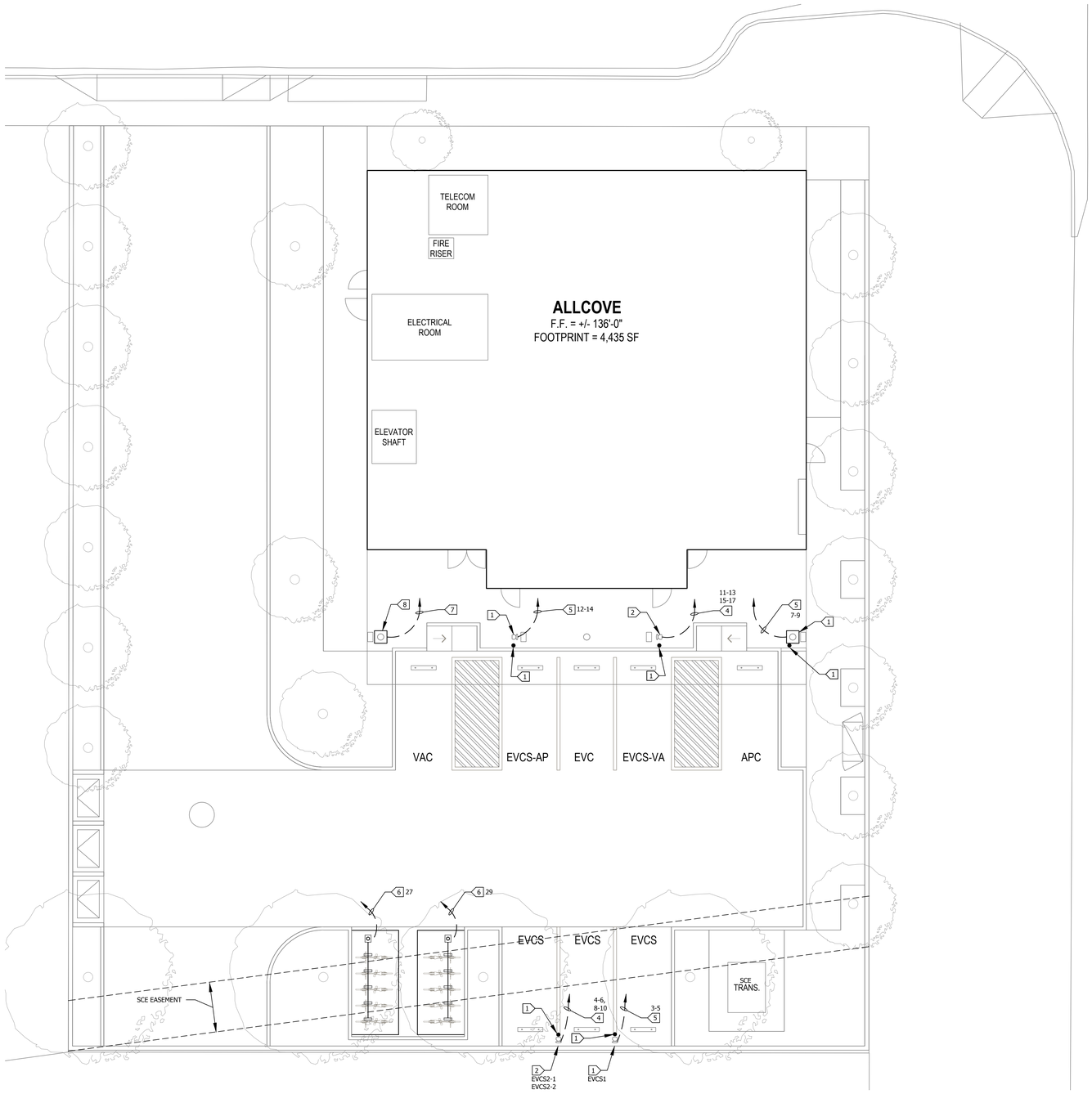

SCALE: 1/8"=1'-0"

0 4' 8' 16'

SITE ELECTRIC VEHICLE EV CHARGER PLAN

SCALE: 1/8"=1'-0"

1 - E400 -

N

SHEET NOTES:

1. CONTRACTOR SHALL FIELD VERIFY LOCATION & REQUIREMENTS OF ALL DEVICES REQUIRING ELECTRICAL CONNECTION PRIOR TO BID PROPOSAL, ROUGH-IN AND FINISH.
2. COORDINATE WORK WITH OTHER TRADES. OBTAIN ALL DRAWINGS THAT WILL REQUIRE COORDINATION AND PROVIDE ALL ELECTRICAL CONNECTIONS, DEVICES, AND WIRING REQUIRED WHETHER SHOWN ON ELECTRICAL DRAWINGS OR NOT.
3. CONTRACTOR SHALL FURNISH AND INSTALL PULL BOXES AS REQUIRED TO INSTALL CONDUCTORS PER CONDUCTOR MANUFACTURERS RECOMMENDATIONS, PER THE NATIONAL ELECTRICAL CODE AND PER LOCAL AUTHORITIES HAVING JURISDICTION.
4. 1" CONDUIT MINIMUM UNDERGROUND.
5. VERIFY LOCATION OF ALL DEVICES ON ARCHITECTURAL PLANS.
6. VERIFY THE EXACT ROUTING OF ALL EXPOSED CONDUIT WITH OWNER PRIOR TO INSTALLATION.

KEY NOTES:

1. EV CHARGER, SINGLE, LEVEL 2, CHARGE POINT 'CT40' BOLLARD MOUNT PROVIDE 12" x 18" x 24" DEEP CONCRETE BASE.
2. EV CHARGER, DUAL, CHARGE POINT 'CT40' LEVEL 2, BOLLARD MOUNT PROVIDE 12" X 18" X 24" DEEP CONCRETE BASE.
3. BIKE CHARGER - ELECTRIC (VERIFY POC CONNECTION WITH MANUFACTURERS)
4. 1"C - 4#8 & 1#10 GND TO PANEL EV CIRCUITS AS NOTED.
5. 1"C - 2#8 1#10 GND TO PANEL EV CIRCUITS AS NOTED.
6. 1"C - 2#10 & 1#10 GROUND TO PANEL EV CIRCUITS AS NOTED.
7. 1"C.O. FOR FUTURE EV CHARGE, HOME RUN TO PANEL EV
8. CHRISTY 12"x18" PULL BOX, TRAFFIC RATED WITH CONCRETE COVER, FLUSH WITH GRADE FIR FUTURE EV CONNECTION.

   PROVIDE 4" CONCRETE FILLED PIPE BOLLARD (PAINT YELLOW) IN FRONT OF EV CHARGER TO PROTECT EV CHARGER

PAUL MURDOCH ARCHITECTS

6310 SAN VICENTE BLVD. SUITE 400
LOS ANGELES, CA 90048
T. 310 358-0993

THE DRAWINGS AND SPECIFICATIONS AND IDEAS, DESIGNS, AND ARRANGEMENTS REPRESENTED THEREBY ARE AND SHALL REMAIN THE PROPERTY OF THE ARCHITECT, AND NO PART THEREOF SHALL BE COPIED, DISCLOSED TO OTHERS, OR USED IN CONNECTION WITH ANY WORK OR PROJECT OTHER THAN THE SPECIFIC PROJECT FOR WHICH THEY HAVE BEEN PREPARED AND DEVELOPED WITHOUT THE WRITTEN CONSENT OF THE ARCHITECT. VISUAL CONTACT WITH THESE DRAWINGS OR SPECIFICATIONS SHALL CONSTITUTE CONCLUSIVE EVIDENCE OF ACCEPTANCE OF THESE RESTRICTIONS. WRITTEN DIMENSIONS ON THESE DRAWINGS SHALL HAVE PRECEDENCE OVER SCALED DIMENSIONS. CONTRACTORS SHALL VERIFY AND BE RESPONSIBLE FOR ALL DIMENSIONS AND CONDITIONS ON THE JOB AND THIS OFFICE MUST BE NOTIFIED OF ANY VARIATIONS FROM THE DIMENSIONS AND CONDITIONS SHOWN BY THESE DRAWINGS. SHOP DETAILS MUST BE SUBMITTED TO THIS OFFICE FOR REVIEW BEFORE PROCEEDING WITH FABRICATION.

LUCCI & ASSOCIATES
CONSULTING ELECTRICAL ENGINEERS
3251 CORTE MALPASO, #511
CAMARILLO, CA 93012-8094
(805) 389-6520 FAX (805) 389-6519

LUCCI & ASSOCIATES, INC. reserve their commonlaw copyright and other property rights in these plans, specifications, and designs. These plans, specifications, and designs are not to be reproduced, changed, or copied in any form or manner whatsoever without first obtaining the expressed written permission of Lucci and Associates. In the event of unauthorized reuse of these plans by a third party, the third party agrees to hold Lucci and Associates harmless for any reuse of these plans, specifications, and designs by any third party without obtaining said written permission and consent.

NO. DATE REVISION

allcove
BEACH CITIES HEALTH DISTRICT

100% PRELIMINARY DESIGN SUBMITTAL

PMA PROJECT NO.
23-727

DRAWING TITLE
SITE ELECTRIC VEHICLE EV CHARGER PLAN

SCALE
AS NOTED

DATE
02-28-2024

DRAWN D.S./L.K. CHECKED K.L.

SHEET NO.
E400

Copyright Lucci and Associates Consulting Electrical Engineers. Deviations from this drawing will not be made without their expressed written permission.

L.A.I.# 23-727 PAPER SIZE 42"x30"

DRAFTER: CM01 DRAWING FILENAME: 23-727 E400 PATHNAME: G:\23\727\EL\Sheets DATE: 27 February 2024 TIME: 3:34 pm

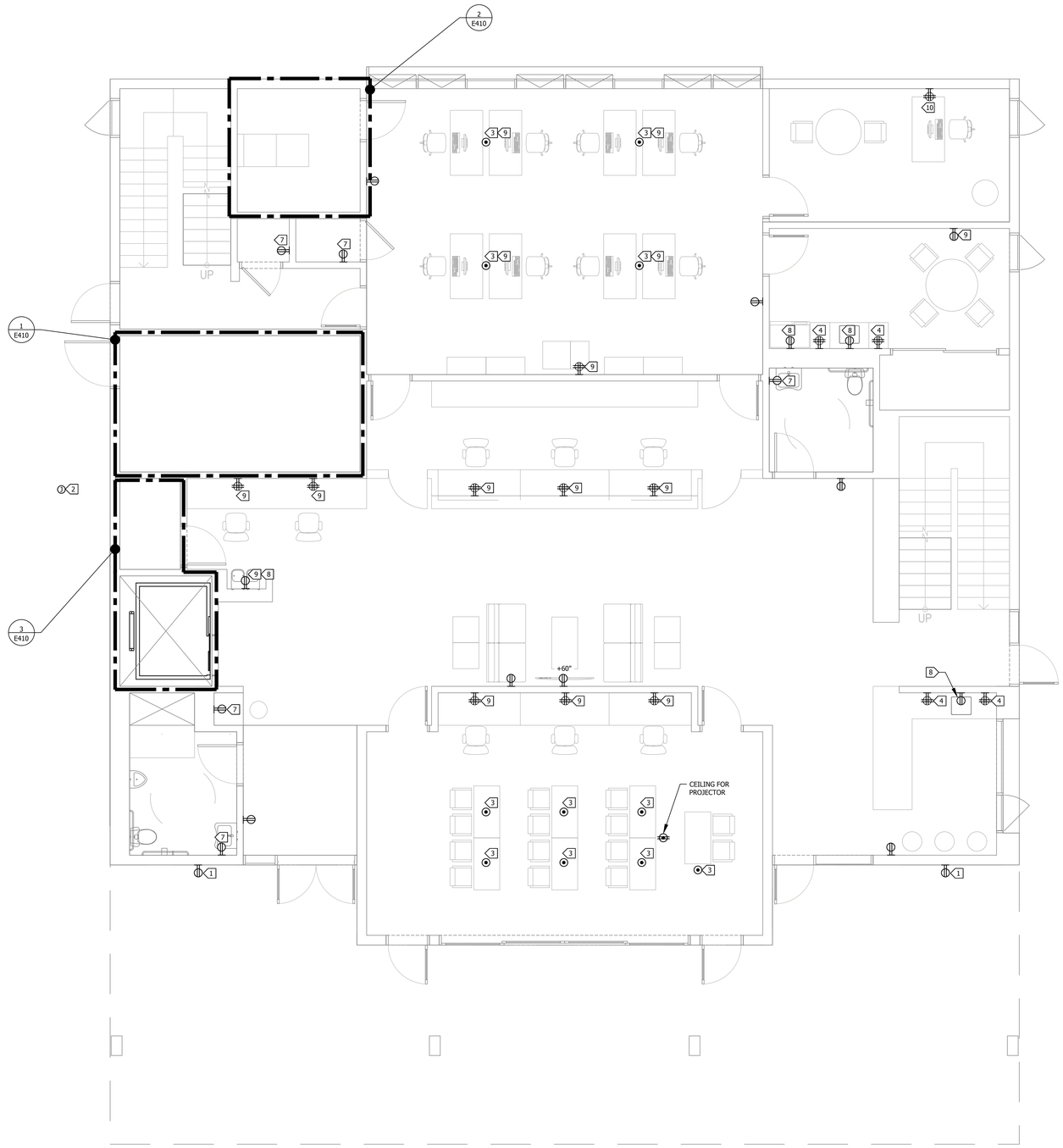

SCALE: 1/4"=1'-0"
0 2' 4' 8'

FIRST LEVEL POWER PLAN

1
E401

SCALE: 1/4"=1'-0"

N

SHEET NOTES:

1. CONTRACTOR SHALL FIELD VERIFY LOCATION & REQUIREMENTS OF ALL DEVICES REQUIRING ELECTRICAL CONNECTION PRIOR TO BID PROPOSAL, ROUGH-IN AND FINISH.
2. COORDINATE WORK WITH OTHER TRADES. OBTAIN ALL DRAWINGS THAT WILL REQUIRE COORDINATION AND PROVIDE ALL ELECTRICAL CONNECTIONS, DEVICES, AND WIRING REQUIRED WHETHER SHOWN ON ELECTRICAL DRAWINGS OR NOT.
3. CONTRACTOR SHALL FURNISH AND INSTALL PULL BOXES AS REQUIRED TO INSTALL CONDUCTORS PER CONDUCTOR MANUFACTURERS RECOMMENDATIONS, PER THE NATIONAL ELECTRICAL CODE AND PER LOCAL AUTHORITIES HAVING JURISDICTION.
4. 3/4" CONDUIT MINIMUM U.O.N.
5. PROVIDE CODE SIZE EQUIPMENT GROUNDING CONDUCTORS IN ALL OCCUPIED CONDUITS.
6. PROVIDE CONTROLS FOR MECHANICAL EQUIPMENT PER MECHANICAL DOCUMENTS. VERIFY LOCATION AND REQUIREMENTS OF MECHANICAL EQUIPMENT ON MECHANICAL DOCUMENTS.
7. VERIFY LOCATION OF ALL DEVICES ON ARCHITECTURAL PLANS.
8. VERIFY THE EXACT ROUTING OF ALL EXPOSED CONDUIT WITH OWNER PRIOR TO INSTALLATION.
9. DO NOT INSTALL RECEPTACLES BACK TO BACK IN WALLS, PROVIDE 18" SEPARATION BETWEEN BOXES & INSTALL PUTTY AROUND BOXES FOR SOUNDPROOFING.

KEY NOTES:

1. WP GFCI RECEPTACLE NEMA 5-20R AT 18" AFG WITH LOCKABLE COVER.
2. POWER FOR LANDSCAPE CONTROLLER, VERIFY LOCATION WITH LANDSCAPE PLANS.
3. FLOOR BOX, HUBBELL SERIES ONE WITH POWER AND COM, DOUBLE DUPLEX.
4. GFCI DOUBLE DUPLEX RECEPTACLE NEMA 5-20R @ +42" AFF, 2 CIRCUITS.
5. GFCI RECEPTACLE NEMA 5-20R.
6. +42" AFF.
7. +42" AFF GFCI RECEPTACLE NEMA 5-20R.
8. GFCI RECEPTACLE AT 18" AFF.
9. DEDICATED 20A 120 VAC CIRCUIT.
10. TWO 20A, 120 VAC, DEDICATED CIRCUITS.

PAUL MURDOCH
ARCHITECTS

6310 SAN VICENTE BLVD. SUITE 400
LOS ANGELES, CA 90048
T. 310 358-0993

THE DRAWINGS AND SPECIFICATIONS AND IDEAS, DESIGNS, AND ARRANGEMENTS REPRESENTED THEREBY ARE AND SHALL REMAIN THE PROPERTY OF THE ARCHITECT AND NO PART THEREOF SHALL BE COPIED, DISCLOSED TO OTHERS, OR USED IN CONNECTION WITH ANY WORK OR PROJECT OTHER THAN THE SPECIFIC PROJECT FOR WHICH THEY HAVE BEEN PREPARED AND DEVELOPED WITHOUT THE WRITTEN CONSENT OF THE ARCHITECT. VISUAL CONTACT WITH THESE DRAWINGS OR SPECIFICATIONS SHALL CONSTITUTE CONCLUSIVE EVIDENCE OF ACCEPTANCE OF THESE RESTRICTIONS. WRITTEN DIMENSIONS ON THESE DRAWINGS SHALL HAVE PRECEDENCE OVER SCALED DIMENSIONS. CONTRACTORS SHALL VERIFY AND BE RESPONSIBLE FOR ALL DIMENSIONS AND CONDITIONS ON THE JOB AND THIS OFFICE MUST BE NOTIFIED OF ANY VARIATIONS FROM THE DIMENSIONS AND CONDITIONS SHOWN BY THESE DRAWINGS. SHOP DETAILS MUST BE SUBMITTED TO THIS OFFICE FOR REVIEW BEFORE PROCEEDING WITH FABRICATION.

LUCCI & ASSOCIATES
CONSULTING ELECTRICAL ENGINEERS
3251 CORTE MALPASO, #511
CAMARILLO, CA 93012-8094
(805) 389-6320 FAX (805) 389-6519

LUCCI & ASSOCIATES, INC. reserve their commonlaw copyright and other property rights in these plans, specifications, and designs. These are not to be reproduced, changed, or copied in any form or manner whatsoever, nor are they to be assigned to any third party, without first obtaining the expressed written permission and consent of LUCCI & ASSOCIATES, INC. In the event of unauthorized reuse by any third party without obtaining said written permission and consent.

NO.	DATE	REVISION

allcove
BEACH CITIES
HEALTH DISTRICT

100% PRELIMINARY
DESIGN SUBMITTAL

PMA PROJECT NO.
23-727

DRAWING TITLE
FIRST LEVEL
POWER PLAN

SCALE
AS NOTED

DATE
02-28-2024

DRAWN D.S./L.K. CHECKED K.L.

SHEET NO.
E401

Copyright Lucci and Associates Consulting Electrical Engineers. Deviations from this drawing will not be made without their expressed written permission.

L.A.I.# 23-727 PAPER SIZE 42"x30"

DRAFTER: CM01 DRAWING FILENAME: 23-727 E401 PATHNAME: G:\23\727\EL\Sheets DATE: 27 February 2024 TIME: 3:34 pm

Drafter:CM01 Paper Size: 12.0
Drawing:G:\23\727\EL\Sheets\23-727 E401.dwg
File:TB-PMA-2.TBL
Plot Scale:1.0000
WWW:G:\23\727\EL\Sheets\23-727 E.dwg
XREF:G:\23\727\EL\Sheets\XRef\23-727 E-XREF-1ST.dwg

Plotter: CM01- X:\Drawe\23\23727\EL\Sheets\23-727 E401.dwg- DATE: FEB 27, 2024 TIME: 3:06 PM

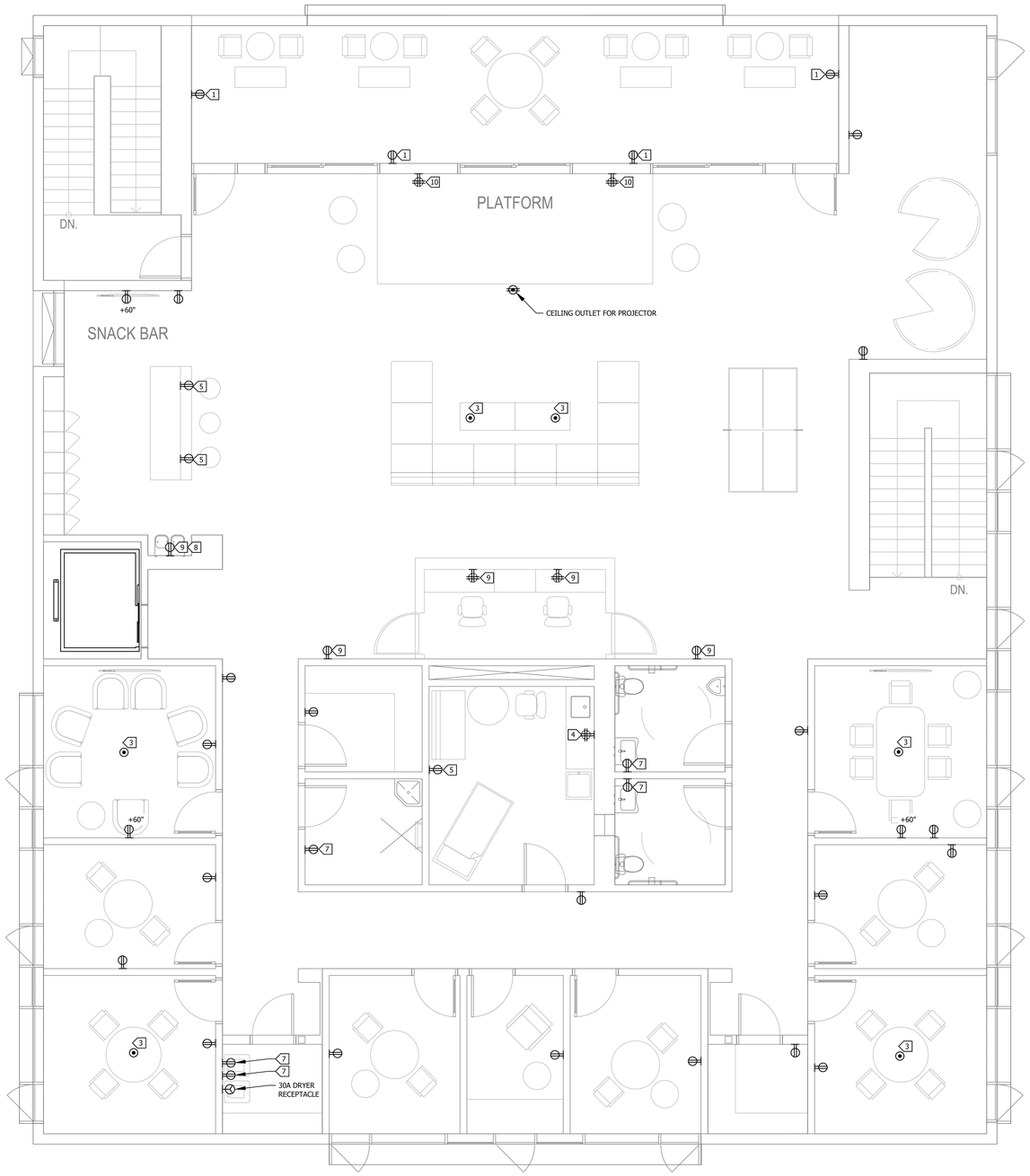

SCALE: 1/4"=1'-0"
0 2' 4' 8'

SECOND LEVEL POWER PLAN

SCALE: 1/4"=1'-0"

1 - - E402

N

SHEET NOTES:

1. CONTRACTOR SHALL FIELD VERIFY LOCATION & REQUIREMENTS OF ALL DEVICES REQUIRING ELECTRICAL CONNECTION PRIOR TO BID PROPOSAL, ROUGH-IN AND FINISH.
2. COORDINATE WORK WITH OTHER TRADES. OBTAIN ALL DRAWINGS THAT WILL REQUIRE COORDINATION AND PROVIDE ALL ELECTRICAL CONNECTIONS, DEVICES, AND WIRING REQUIRED WHETHER SHOWN ON ELECTRICAL DRAWINGS OR NOT.
3. CONTRACTOR SHALL FURNISH AND INSTALL PULL BOXES AS REQUIRED TO INSTALL CONDUCTORS PER CONDUCTOR MANUFACTURERS RECOMMENDATIONS, PER THE NATIONAL ELECTRICAL CODE AND PER LOCAL AUTHORITIES HAVING JURISDICTION.
4. 3/4" CONDUIT MINIMUM U.O.N.
5. PROVIDE CODE SIZE EQUIPMENT GROUNDING CONDUCTORS IN ALL OCCUPIED CONDUITS.
6. PROVIDE CONTROLS FOR MECHANICAL EQUIPMENT PER MECHANICAL DOCUMENTS. VERIFY LOCATION AND REQUIREMENTS OF MECHANICAL EQUIPMENT ON MECHANICAL DOCUMENTS.
7. VERIFY LOCATION OF ALL DEVICES ON ARCHITECTURAL PLANS.
8. VERIFY THE EXACT ROUTING OF ALL EXPOSED CONDUIT WITH OWNER PRIOR TO INSTALLATION.
9. DO NOT INSTALL RECEPTACLES BACK TO BACK IN WALLS, PROVIDE 18" SEPARATION BETWEEN BOXES & INSTALL PUTTY AROUND BOXES FOR SOUNDPROOFING.

KEY NOTES:

1. WP GFCI RECEPTACLE NEMA 5-20R AT 18" AFG WITH LOCKABLE COVER.
2. POWER FOR LANDSCAPE CONTROLLER, VERIFY LOCATION WITH LANDSCAPE PLANS.
3. FLOOR BOX, HUBBELL SERIES ONE WITH POWER AND COM, DOUBLE DUPLEX.
4. GFCI DOUBLE DUPLEX RECEPTACLE NEMA 5-20R @ +42" AFF, 2 CIRCUITS.
5. GFCI RECEPTACLE NEMA 5-20R.
6. +42" AFF.
7. +42" AFF GFCI NEMA 5-20R.
8. GFCI RECEPTACLE AT 18" AFF.
9. DEDICATED 20A 120 VAC CIRCUIT.
10. TWO 20A, 120 VAC, DEDICATED CIRCUITS.

PAUL MURDOCH ARCHITECTS

6310 SAN VICENTE BLVD. SUITE 400
LOS ANGELES, CA 90048
T. 310 358-0993

THE DRAWINGS AND SPECIFICATIONS AND IDEAS, DESIGNS, AND ARRANGEMENTS REPRESENTED THEREBY ARE AND SHALL REMAIN THE PROPERTY OF THE ARCHITECT AND NO PART THEREOF SHALL BE COPIED, DISCLOSED TO OTHERS, OR USED IN CONNECTION WITH ANY WORK OR PROJECT OTHER THAN THE SPECIFIC PROJECT FOR WHICH THEY HAVE BEEN PREPARED AND DEVELOPED WITHOUT THE WRITTEN CONSENT OF THE ARCHITECT. VISUAL CONTACT WITH THESE DRAWINGS OR SPECIFICATIONS SHALL CONSTITUTE CONCLUSIVE EVIDENCE OF ACCEPTANCE OF THESE RESTRICTIONS. WRITTEN DIMENSIONS ON THESE DRAWINGS SHALL HAVE PRECEDENCE OVER SCALED DIMENSIONS. CONTRACTORS SHALL VERIFY AND BE RESPONSIBLE FOR ALL DIMENSIONS AND CONDITIONS ON THE JOB AND THIS OFFICE MUST BE NOTIFIED OF ANY VARIATIONS FROM THE DIMENSIONS AND CONDITIONS SHOWN BY THESE DRAWINGS. SHOP DETAILS MUST BE SUBMITTED TO THIS OFFICE FOR REVIEW BEFORE PROCEEDING WITH FABRICATION.

LUCCI & ASSOCIATES INC.
CONSULTING ELECTRICAL ENGINEERS
3251 CORTE MALPASO, #611
CAMARILLO, CA 93012-8094
(805) 389-6320 FAX (805) 389-6519

LUCCI & ASSOCIATES, INC. reserve their commonlaw copyright and other property rights in these plans, specifications, and drawings. These plans are not to be reproduced, changed, or copied in any form or manner whatsoever without first obtaining the expressed written permission and consent of LUCCI & ASSOCIATES, INC. nor shall they be assigned to any third party without obtaining said written permission and consent.

NO.	DATE	REVISION

allcove
BEACH CITIES HEALTH DISTRICT

100% PRELIMINARY DESIGN SUBMITTAL

PMA PROJECT NO.
23-727

DRAWING TITLE
SECOND LEVEL POWER PLAN

SCALE
AS NOTED

DATE
02-28-2024

DRAWN D.S./L.K. CHECKED K.L.

SHEET NO.
E402

Copyright Lucci and Associates Consulting Electrical Engineers. Deviations from this drawing will not be made without their expressed written permission.

L.A.I.# 23-727 PAPER SIZE 42"x30"

DRAFTER: CM01 DRAWING FILENAME: 23-727 E402 PATHNAME: G:\23\727\EL\Sheets DATE: 27 February 2024 TIME: 3:34 pm

Drafter: CM01 Paper Size: 1.0,1
Drawing Name: G:\23\727\EL\Sheets\23-727 E402.dwg
Plot Scale: 1.0000 CHW
Plot Date: Wed, Feb 28, 2024 - 3:06pm
WWW.CTB.STB: monochrome.ctb
WWW.PC3:DWG To PDF.pc3
WWW.PMP:ANSI expand D (34.00 x 22.00) (landscape).pmp

Drafter: CM01: X:\Drive0\23\727\EL\Sheets\23-727 E402.dwg; DATE: FEB 27, 2024 TIME: 3:06 PM

SHEET NOTES:

1. CONTRACTOR SHALL FIELD VERIFY LOCATION & REQUIREMENTS OF ALL DEVICES REQUIRING ELECTRICAL CONNECTION PRIOR TO BID PROPOSAL, ROUGH-IN AND FINISH.
2. COORDINATE WORK WITH OTHER TRADES. OBTAIN ALL DRAWINGS THAT WILL REQUIRE COORDINATION AND PROVIDE ALL ELECTRICAL CONNECTIONS, DEVICES, AND WIRING REQUIRED WHETHER SHOWN ON ELECTRICAL DRAWINGS OR NOT.
3. CONTRACTOR SHALL FURNISH AND INSTALL PULL BOXES AS REQUIRED TO INSTALL CONDUCTORS PER CONDUCTOR MANUFACTURERS RECOMMENDATIONS, PER THE NATIONAL ELECTRICAL CODE AND PER LOCAL AUTHORITIES HAVING JURISDICTION.
4. 3/4" CONDUIT MINIMUM U.O.N.
5. PROVIDE CODE SIZE EQUIPMENT GROUNDING CONDUCTORS IN ALL OCCUPIED CONDUITS.

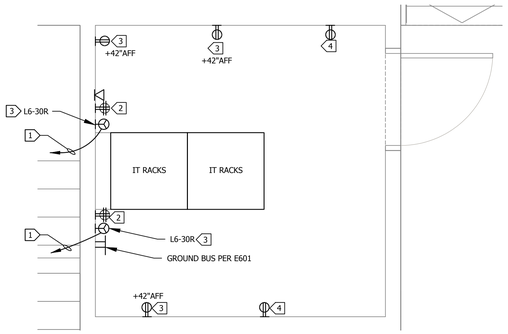

1/2" - 1'-0"
0 1' 2' 4'

TELECOM ROOM POWER PLAN 2
SCALE: 1/2"=1'-0" - E410

N

KEY NOTES:

1. 1"C - 3#6 & 1#10 GND TO PANEL L5.
2. (2) 20A, 120 VAC CIRCUITS.
3. DEDICATED CIRCUITS.
4. +18" AFF GFCI NEMA 5-20R.
5. 200A, 120/208 VAC, 3Ø, 4W, CONNECT PER E200.
6. 400A, 120/208 VAC, 3Ø, 4W, CONNECT PER E200.
7. EM INVERTER 10KVA, 120/240 VAC, PER E601, HOME RUN PER E200.
8. PROVIDE DEDICATED 20A, 120VAC, CIRCUIT WITH LOCK ON DEVICE. \
9. PER E200.
10. DESIGN BUILD FA.
11. TO SHUNT TRIP ELEVATOR BREAKER.
12. DESIGN BUILD PV.

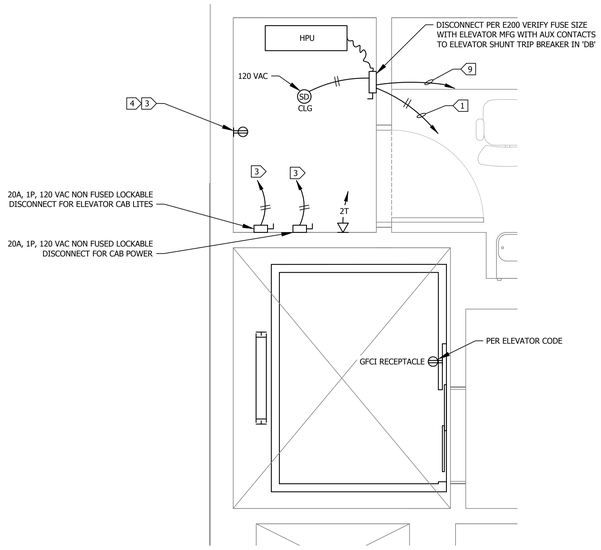

1/2" - 1'-0"
0 1' 2' 4'

ELEVATOR & MACHINE ROOM POWER PLAN 3
SCALE: 1/2"=1'-0" - E410

N

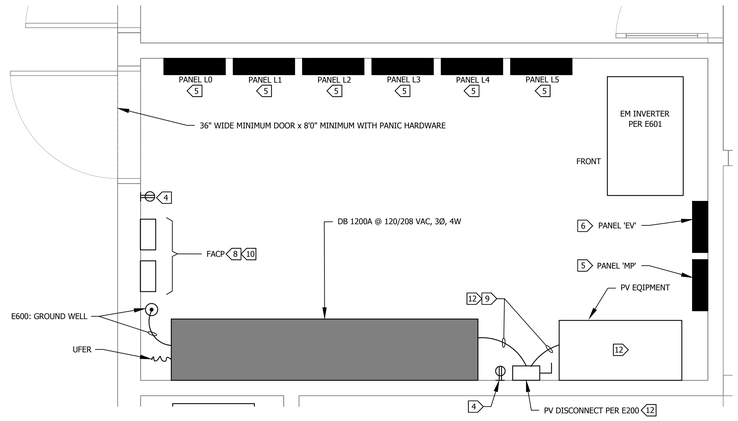

1/2" - 1'-0"
0 1' 2' 4'

ELECTRICAL ROOM POWER PLAN 1
SCALE: 1/2"=1'-0" - E410

N

PAUL MURDOCH ARCHITECTS

6310 SAN VICENTE BLVD. SUITE 400
LOS ANGELES, CA 90048
T. 310 358-0993

THE DRAWINGS AND SPECIFICATIONS AND IDEAS, DESIGNS, AND ARRANGEMENTS REPRESENTED THEREBY ARE AND SHALL REMAIN THE PROPERTY OF THE ARCHITECT AND NO PART THEREOF SHALL BE COPIED, DISCLOSED TO OTHERS, OR USED IN CONNECTION WITH ANY WORK OR PROJECT OTHER THAN THE SPECIFIC PROJECT FOR WHICH THEY HAVE BEEN PREPARED AND DEVELOPED WITHOUT THE WRITTEN CONSENT OF THE ARCHITECT. VISUAL CONTACT WITH THESE DRAWINGS OR SPECIFICATIONS SHALL CONSTITUTE CONCLUSIVE EVIDENCE OF ACCEPTANCE OF THESE RESTRICTIONS. WRITTEN DIMENSIONS ON THESE DRAWINGS SHALL HAVE PRECEDENCE OVER SCALED DIMENSIONS. CONTRACTORS SHALL VERIFY AND BE RESPONSIBLE FOR ALL DIMENSIONS AND CONDITIONS ON THE JOB AND THIS OFFICE MUST BE NOTIFIED OF ANY VARIATIONS FROM THE DIMENSIONS AND CONDITIONS SHOWN BY THESE DRAWINGS. SHOP DETAILS MUST BE SUBMITTED TO THIS OFFICE FOR REVIEW BEFORE PROCEEDING WITH FABRICATION.

LUCCI & ASSOCIATES
CONSULTING ELECTRICAL ENGINEERS
3251 CORTE MALPASO, #511
CAMARILLO, CA 93012-8094
(805) 389-6320 FAX (805) 389-6519

LUCCI & ASSOCIATES, INC. reserve their commonlaw copyright and other property rights in these plans, specifications, and designs. These plans, specifications, and designs are not to be reproduced, changed, or copied in any form or manner whatsoever, nor are they to be assigned to any third party, without first obtaining the expressed written permission and consent of LUCCI & ASSOCIATES, INC. In the event of unauthorized reuse of these plans, specifications, and designs by a third party, the third party agrees to hold LUCCI & ASSOCIATES, INC. harmless.

NO.	DATE	REVISION

allcove
BEACH CITIES HEALTH DISTRICT

100% PRELIMINARY DESIGN SUBMITTAL

PMA PROJECT NO.
23-727

DRAWING TITLE
ENLARGED POWER PLANS

SCALE
AS NOTED

DATE
02-28-2024

DRAWN D.S./L.K. CHECKED K.L.

SHEET NO.
E410

Copyright Lucci and Associates Consulting Electrical Engineers. Deviations from this drawing will not be made without their expressed written permission.

L.A.I.# 23-727 PAPER SIZE 42"x30"

ELECTRICAL SCHEDULE FOR MECHANICAL EQUIPMENT

TAG #	DESCRIPTION	H.P.	FLA	MAX OCP	VOLTAGE	PHASE	NEMA STARTER SIZE OR VFD	DISCONNECT	RECOMMENDED FUSE SIZE/TYPE *	REMARKS	PANEL/CIRCUIT NO.	FEEDER
HP1 -	HEAT PUMP #1 FOR FIRST FLOOR	..	30.9	40	208	3	N/A	60A/3P	40	4	MP-1-3-5	3/4"C - 3#8 & 1#10 GND
HP2 -	HEAT PUMP #2 FOR SECOND FLOOR	..	22.6	35	208	3	N/A	60A/3P	35	4	MP-7-9-11	3/4"C - 3#10 & 1#10 GND
HP3 -	HEAT PUMP #3 FOR THIRD FLOOR	..	28.5	40	208	3	N/A	60A/3P	40	4	MP-13-15-17	3/4"C - 3#8 & 1#10 GND
FC1.1 -	FAN COIL 1.1	..	1.6	15	208	1	N/A	MOTOR RATED SWITCH	N/A	4	MP-19-21	3/4"C - 2#12 & 1#12 GND
FC1.2 -	FAN COIL 1.2	..	2.3	15	208	1	N/A	MOTOR RATED SWITCH	N/A	4	MP-19-21	3/4"C - 2#12 & 1#12 GND
FC1.3 -	FAN COIL 1.3	..	2.3	15	208	1	N/A	MOTOR RATED SWITCH	N/A	4	MP-23-25	3/4"C - 2#12 & 1#12 GND
FC1.4 -	FAN COIL 1.4	..	1.6	15	208	1	N/A	MOTOR RATED SWITCH	N/A	4	MP-23-25	3/4"C - 2#12 & 1#12 GND
FC1.5 -	FAN COIL 1.5	..	.4	15	208	1	N/A	MOTOR RATED SWITCH	N/A	4	MP-23-25	3/4"C - 2#12 & 1#12 GND
FC1.6 -	FAN COIL 1.6	..	.4	15	208	1	N/A	MOTOR RATED SWITCH	N/A	4	MP-23-25	3/4"C - 2#12 & 1#12 GND
FC1.7 -	FAN COIL 1.7	..	.4	15	208	1	N/A	MOTOR RATED SWITCH	N/A	4	MP-27-29	3/4"C - 2#12 & 1#12 GND
FC2.1 -	FAN COIL 2.1	..	.4	15	208	1	N/A	MOTOR RATED SWITCH	N/A	4	MP-27-29	3/4"C - 2#12 & 1#12 GND
FC2.2 -	FAN COIL 2.2	..	.4	15	208	1	N/A	MOTOR RATED SWITCH	N/A	4	MP-27-29	3/4"C - 2#12 & 1#12 GND
FC2.3 -	FAN COIL 2.3	..	.4	15	208	1	N/A	MOTOR RATED SWITCH	N/A	4	MP-27-29	3/4"C - 2#12 & 1#12 GND
FC2.4 -	FAN COIL 2.4	..	.4	15	208	1	N/A	MOTOR RATED SWITCH	N/A	4	MP-27-29	3/4"C - 2#12 & 1#12 GND
FC2.5 -	FAN COIL 2.5	..	.4	15	208	1	N/A	MOTOR RATED SWITCH	N/A	4	MP-27-29	3/4"C - 2#12 & 1#12 GND
FC2.6 -	FAN COIL 2.6	..	.4	15	208	1	N/A	MOTOR RATED SWITCH	N/A	4	MP-31-33	3/4"C - 2#12 & 1#12 GND
FC2.7 -	FAN COIL 2.7	..	.4	15	208	1	N/A	MOTOR RATED SWITCH	N/A	4	MP-31-33	3/4"C - 2#12 & 1#12 GND
FC2.8 -	FAN COIL 2.8	..	.4	15	208	1	N/A	MOTOR RATED SWITCH	N/A	4	MP-31-33	3/4"C - 2#12 & 1#12 GND
FC2.9 -	FAN COIL 2.9	..	.4	15	208	1	N/A	MOTOR RATED SWITCH	N/A	4	MP-31-33	3/4"C - 2#12 & 1#12 GND
FC2.10 -	FAN COIL 2.10	..	.4	15	208	1	N/A	MOTOR RATED SWITCH	N/A	4	MP-31-33	3/4"C - 2#12 & 1#12 GND
FC2.11 -	FAN COIL 2.11	..	2.3	15	208	1	N/A	MOTOR RATED SWITCH	N/A	4	MP-35-37	3/4"C - 2#12 & 1#12 GND
FC2.12 -	FAN COIL 2.12	..	2.3	15	208	1	N/A	MOTOR RATED SWITCH	N/A	4	MP-35-37	3/4"C - 2#12 & 1#12 GND
FC2.13 -	FAN COIL 2.13	..	1.6	15	208	1	N/A	MOTOR RATED SWITCH	N/A	4	MP-39-41	3/4"C - 2#12 & 1#12 GND
FC2.14 -	FAN COIL 2.14	..	1.6	15	208	1	N/A	MOTOR RATED SWITCH	N/A	4	MP-39-41	3/4"C - 2#12 & 1#12 GND
EF1 -	EXHAUST FAN 1	.2	..	..	120	1	N/A	MOTOR RATED SWITCH	N/A	4	MP-2	3/4"C - 2#12 & 1#12 GND
EF2 -	EXHAUST FAN 2	.2	..	..	120	1	N/A	MOTOR RATED SWITCH	N/A	4	MP-4	3/4"C - 2#12 & 1#12 GND
EF3 -	EXHAUST FAN 3	.1	..	..	120	1	N/A	MOTOR RATED SWITCH	N/A	4	MP-6	3/4"C - 2#12 & 1#12 GND
SF1 -	SUPPLY FAN 1	.2	..	..	120	1	N/A	MOTOR RATED SWITCH	N/A	4	MP-8	3/4"C - 2#12 & 1#12 GND
SF2 -	SUPPLY FAN 2	.2	..	..	120	1	N/A	MOTOR RATED SWITCH	N/A	4	MP-10	3/4"C - 2#12 & 1#12 GND
WH-1 -	WATER HEATER	..	10	15	120	1	N/A	MOTOR RATED SWITCH	N/A	4	MP-12	3/4"C - 2#12 & 1#12 GND

* ALL FUSES BY BUSSMAN AND SHALL BE SIZED PER MANUFACTURERS RECOMMENDATION.

SHEET NOTES:

1. FIELD VERIFY MECHANICAL EQUIPMENT LOCATIONS.
2. SEE ELECTRICAL SCHEDULE FOR MECHANICAL EQUIPMENT FOR ELECTRICAL REQUIREMENTS.
3. ALL WORK SHALL BE COORDINATED WITH OTHER TRADES.
4. THE LOCATION OF ALL ROOF PENETRATIONS SHALL BE COORDINATED WITH THE ARCHITECTURAL, MECHANICAL, AND STRUCTURAL DRAWINGS.
5. PROVIDE ROOF JACKS AND PROPERLY SEAL ALL ROOF PENETRATIONS TO A LEAK FREE CONDITION.
6. THE FINAL CONNECTIONS TO EQUIPMENT SHALL BE LIQUIDTIGHT FLEXIBLE METAL CONDUIT. INSTALL WITH ENOUGH SLACK TO PRECLUDE VIBRATION TRANSMISSION. SUPPORT SHALL BE PER N.E.C. ARTICLE 351-8
7. PROVIDE WEATHERPROOF AND EXTERIOR RATED DEVICES IN ALL EXTERIOR AREAS.
8. PROVIDE ALL DEVICES AS REQUIRED ON MECHANICAL CONTRACTOR SHOP DRAWINGS AND APPROVED SUBMITTALS.
9. NO CONDUIT/FEEDER SHALL BE PERMITTED ON THE ROOF WITH CRIPPLES,ALL FEEDERS SHALL BE RUN BENEATH THE ROOF.
10. ALL DISCONNECTS SHALL BE MOUNTED ON UNISTRUT ON AH UNIT.
11. CONTRACTOR SHALL VERIFY LOCATION & REQUIREMENTS OF ALL ELECTRICAL DEVICES PRIOR TO BID, ROUGH-IN & INSTALLATION.
12. CONTRACTOR SHALL, IN ROUTING ALL CIRCUITS, INCREASE CONDUCTOR & CONDUIT SIZE TO ALLOW FOR VOLTAGE DROP SHOULD THE CONTRACTOR EXCEED ROUTING INDICATED ON DRAWING. ENGINEER OF RECORD MUST BE NOTIFIED PRIOR TO ANY DEVIATIONS FROM APPROVED PLAN CHECK (PERMIT SET) DRAWINGS.
13. EACH DISCONNECT OR STARTER AND A SPARE SET OF FUSES SHALL BE CONTRACTOR PROVIDED.

KEY NOTES:

1. FOR FEEDER AND DISCONNECT INFORMATION SEE ELECTRICAL SCHEDULE FOR MECHANICAL EQUIPMENT THIS SHEET.
2. PROVIDE 3/4"C & CONTROLS PER MECHANICAL.
3. W.P. GFCI. RECEPTACLE
4. SEE MECHANICAL PLANS FOR CONTROLS, CONNECTIONS, & INSTALLATION REQUIREMENTS.

PAUL MURDOCH ARCHITECTS

6310 SAN VICENTE BLVD. SUITE 400
LOS ANGELES, CA 90048
T. 310 358-0993

THE DRAWINGS AND SPECIFICATIONS AND IDEAS, DESIGNS, AND ARRANGEMENTS REPRESENTED THEREBY ARE AND SHALL REMAIN THE PROPERTY OF THE ARCHITECT AND NO PART THEREOF SHALL BE COPIED, DISCLOSED TO OTHERS, OR USED IN CONNECTION WITH ANY WORK OR PROJECT OTHER THAN THE SPECIFIC PROJECT FOR WHICH THEY HAVE BEEN PREPARED AND DEVELOPED WITHOUT THE WRITTEN CONSENT OF THE ARCHITECT. VISUAL CONTACT WITH THESE DRAWINGS OR SPECIFICATIONS SHALL CONSTITUTE CONCLUSIVE EVIDENCE OF ACCEPTANCE OF THESE RESTRICTIONS. WRITTEN DIMENSIONS ON THESE DRAWINGS SHALL HAVE PRECEDENCE OVER SCALED DIMENSIONS. CONTRACTORS SHALL VERIFY AND BE RESPONSIBLE FOR ALL DIMENSIONS AND CONDITIONS ON THE JOB AND THIS OFFICE MUST BE NOTIFIED OF ANY VARIATIONS FROM THE DIMENSIONS AND CONDITIONS SHOWN BY THESE DRAWINGS. SHOP DETAILS MUST BE SUBMITTED TO THIS OFFICE FOR REVIEW BEFORE PROCEEDING WITH FABRICATION.

LUCCI & ASSOCIATES
CONSULTING ELECTRICAL ENGINEERS
3251 CORTE MALPASO, #611
CAMARILLO, CA 93012-8094
(805) 389-6320 FAX (805) 389-6519

LUCCI & ASSOCIATES, INC. reserve their commonlaw copyright and other property rights in these plans. These plans are not to be reproduced, changed, or copied in any form or manner whatsoever without first obtaining the expressed written permission of Lucci and Associates. These plans are not to be loaned to any third party without obtaining said written permission and consent.

NO. DATE REVISION

allcove
BEACH CITIES HEALTH DISTRICT

100% PRELIMINARY DESIGN SUBMITTAL

PMA PROJECT NO.
23-727

DRAWING TITLE
ELECTRICAL SCHEDULE FOR MECHANICAL EQUIPMENT

SCALE
AS NOTED

DATE
02-28-2024

DRAWN D.S./L.K. CHECKED K.L.

SHEET NO.
E420

Copyright Lucci and Associates Consulting Electrical Engineers. Deviations from this drawing will not be made without their expressed written permission.

L.A.I.# 23-727 PAPER SIZE 42"x30"

DRAFTER: CM01 DRAWING FILENAME: 23-727 E420 PATHNAME: G:\23\727\EL\Sheets DATE: 27 February 2024 TIME: 3:34 pm

Drafter:CM01 Paper Size: 1.1X
Path:G:\23\727\EL\Sheets\23-727 E420.dwg
File:23-727 E420.dwg
Plotted by:Lucci & Associates
9/07/01\23\727\EL\sheets\23-727 TB.dwg

Drafter: CM01: G:\23\727\EL\Sheets\23-727 E420.dwg: DATE: SEP 18, 2023 TIME: 9:49 AM

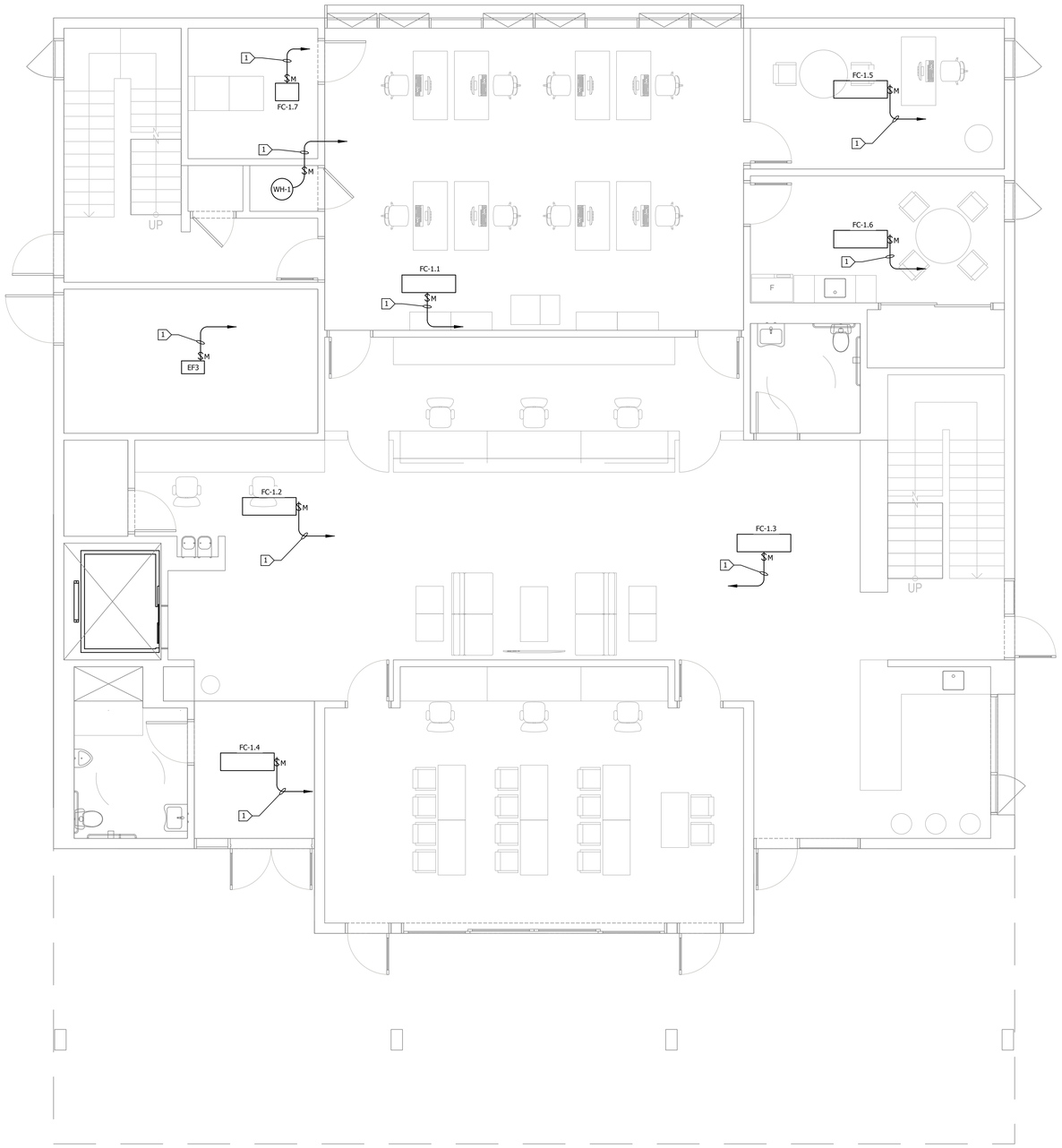

SCALE: 1/4"=1'-0"
0 2' 4' 8'

FIRST LEVEL MECHANICAL POWER PLAN

1 - E421

SCALE: 1/4"=1'-0"

N

SHEET NOTES:

1. COORDINATE MECHANICAL EQUIPMENT LOCATIONS.
2. SEE ELECTRICAL SCHEDULE PER MECHANICAL EQUIPMENT FOR ELECTRICAL REQUIREMENTS.
3. ALL WORK SHALL BE COORDINATED WITH OTHER TRADES.
4. THE LOCATION OF ALL ROOF PENETRATIONS SHALL BE COORDINATED WITH THE ARCHITECTURAL, MECHANICAL, AND STRUCTURAL DRAWINGS.
5. THE FINAL CONNECTIONS TO EQUIPMENT SHALL BE LIQUIDTIGHT FLEXIBLE METAL CONDUIT. INSTALL WITH ENOUGH SLACK TO PRECLUDE VIBRATION TRANSMISSION. SUPPORT SHALL BE PER N.E.C. ARTICLE 351-8.
6. PROVIDE WEATHERPROOF AND EXTERIOR RATED DEVICES IN ALL EXTERIOR AREAS.
7. PROVIDE ALL DEVICES AS REQUIRED ON MECHANICAL CONTRACTOR SHOP DRAWINGS AND APPROVED SUBMITTALS.
8. NO CONDUIT/FEEDER SHALL BE PERMITTED ON THE ROOF WITH CRIPPLES, ALL FEEDERS SHALL BE RUN BENEATH THE ROOF.
9. ALL DISCONNECTS SHALL BE MOUNTED ON UNISTRUT ON AH OR EF UNITS.
10. CONTRACTOR SHALL VERIFY LOCATION & REQUIREMENTS OF ALL ELECTRICAL DEVICES PRIOR TO BID, ROUGH-IN & INSTALLATION.
11. CONTRACTOR SHALL, IN ROUTING ALL CIRCUITS, INCREASE CONDUCTOR & CONDUIT SIZE TO ALLOW FOR VOLTAGE DROP SHOULD THE CONTRACTOR EXCEED ROUTING INDICATED ON DRAWING. ENGINEER OF RECORD MUST BE NOTIFIED PRIOR TO ANY DEVIATIONS FROM APPROVED PLAN CHECK (PERMIT SET) DRAWINGS.
12. EACH DISCONNECT OR STARTER AND A SPARE SET OF FUSES SHALL BE CONTRACTOR PROVIDED.

KEY NOTES:

1 HOME RUN & CONTROLS PER E420 & MECHANICAL PLANS.

PAUL MURDOCH ARCHITECTS

6310 SAN VICENTE BLVD. SUITE 400
LOS ANGELES, CA 90048
T. 310 358-0993

THE DRAWINGS AND SPECIFICATIONS AND IDEAS, DESIGNS, AND ARRANGEMENTS REPRESENTED THEREBY ARE AND SHALL REMAIN THE PROPERTY OF THE ARCHITECT AND NO PART THEREOF SHALL BE COPIED, DISCLOSED TO OTHERS, OR USED IN CONNECTION WITH ANY WORK OR PROJECT OTHER THAN THE SPECIFIC PROJECT FOR WHICH THEY HAVE BEEN PREPARED AND DEVELOPED WITHOUT THE WRITTEN CONSENT OF THE ARCHITECT. VISUAL CONTACT WITH THESE DRAWINGS OR SPECIFICATIONS SHALL CONSTITUTE CONCLUSIVE EVIDENCE OF ACCEPTANCE OF THESE RESTRICTIONS. WRITTEN DIMENSIONS ON THESE DRAWINGS SHALL HAVE PRECEDENCE OVER SCALED DIMENSIONS. CONTRACTORS SHALL VERIFY AND BE RESPONSIBLE FOR ALL DIMENSIONS AND CONDITIONS ON THE JOB AND THIS OFFICE MUST BE NOTIFIED OF ANY VARIATIONS FROM THE DIMENSIONS AND CONDITIONS SHOWN BY THESE DRAWINGS. SHOP DETAILS MUST BE SUBMITTED TO THIS OFFICE FOR REVIEW BEFORE PROCEEDING WITH FABRICATION.

LUCCI & ASSOCIATES INC.
CONSULTING ELECTRICAL ENGINEERS
3251 CORTE MALPASO, #611
CAMARILLO, CA 93012-8094
(805) 389-6320 FAX (805) 389-6519

LUCCI & ASSOCIATES, INC. reserve their commonlaw copyright and other property rights in these plans, specifications, and designs. These plans and specifications are not to be reproduced, changed, or copied in any form or manner whatsoever, nor are they to be assigned to any third party, without first obtaining the expressed written permission and consent of LUCCI & ASSOCIATES, INC. In the event of unauthorized reuse of these plans and specifications by a third party, the third party agrees to hold harmless LUCCI & ASSOCIATES, INC. for any liability resulting from any such reuse or modification.

NO.	DATE	REVISION

allcove
BEACH CITIES HEALTH DISTRICT

100% PRELIMINARY DESIGN SUBMITTAL

PMA PROJECT NO.
23-727

DRAWING TITLE
FIRST LEVEL MECHANICAL POWER PLAN

SCALE
AS NOTED

DATE
02-28-2024

DRAWN D.S./L.K. CHECKED K.L.

SHEET NO.
E421

Copyright Lucci and Associates Consulting Electrical Engineers. Deviations from this drawing will not be made without their expressed written permission.

L.A.I.# 23-727 PAPER SIZE 42"x30"

DRAFTER: CM01 DRAWING FILENAME: 23-727 E421 PATHNAME: G:\23\727\EL\Sheets DATE: 27 February 2024 TIME: 3:35 pm

Drafter:CM01; Paper Size: 12.0
Drawing:G:\23\727\EL\Sheets\23-727 E421.dwg
File:23-727E421.dwg
Plotted:Mon, Feb 26, 2024
WWW.CLICKPLOT.COM
WWW.CLICKPLOT.COM\ACCOUNTS\24\24-0278\Log
WWW.CLICKPLOT.COM\ACCOUNTS\24\24-0278\Log\23-727.dwg

Plotter: CM01; G:\23\727\EL\Sheets\23-727 E420.dwg; DATE: SEP 18, 2023 TIME: 9:49 AM

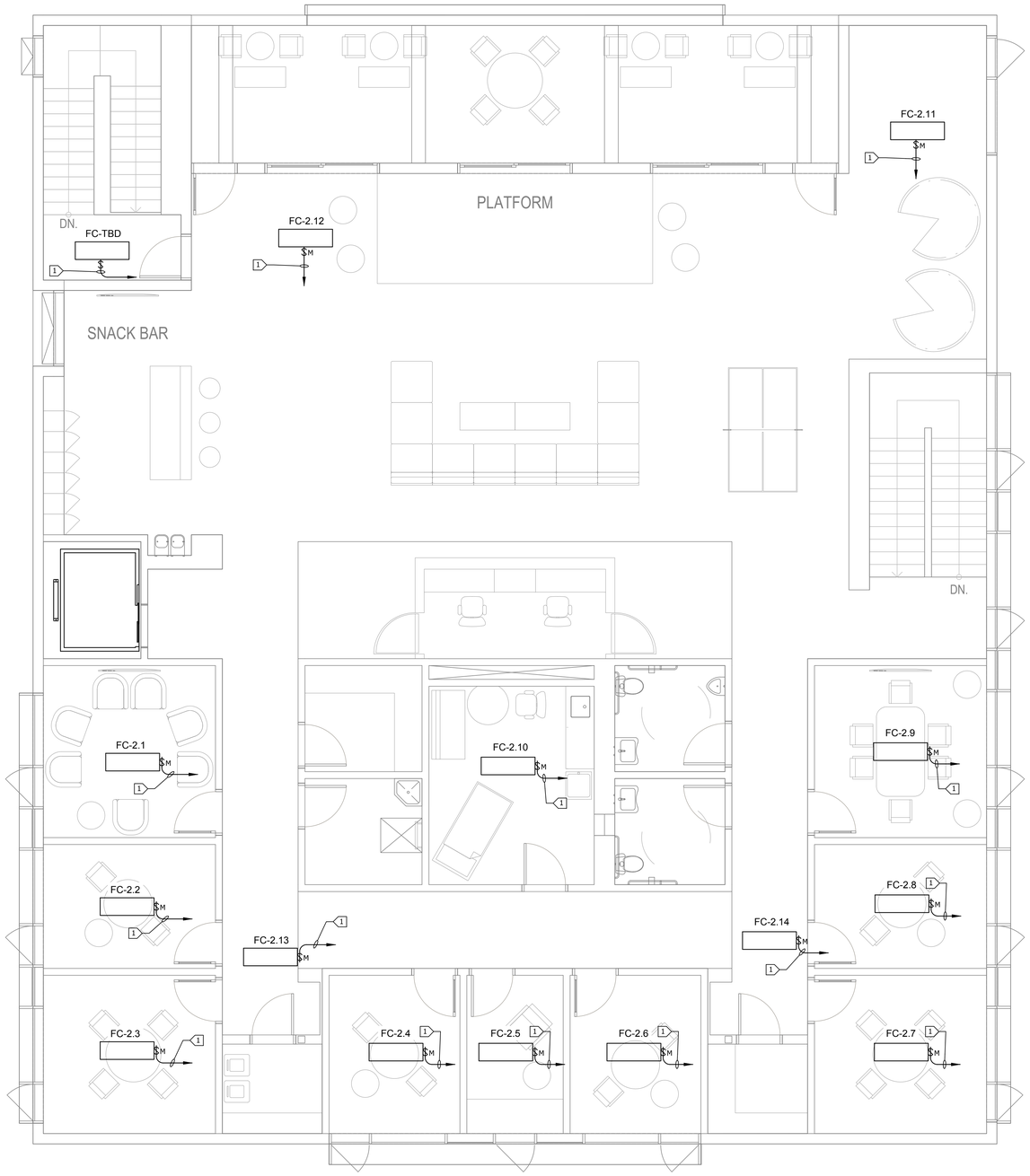

SCALE: 1/4"=1'-0"
0 2' 4' 8'

SECOND LEVEL MECHANICAL POWER PLAN

SCALE: 1/4"=1'-0"

1 - E422 -

N

SHEET NOTES:

1. COORDINATE MECHANICAL EQUIPMENT LOCATIONS.
2. SEE ELECTRICAL SCHEDULE PER MECHANICAL EQUIPMENT FOR ELECTRICAL REQUIREMENTS.
3. ALL WORK SHALL BE COORDINATED WITH OTHER TRADES.
4. THE LOCATION OF ALL ROOF PENETRATIONS SHALL BE COORDINATED WITH THE ARCHITECTURAL, MECHANICAL, AND STRUCTURAL DRAWINGS.
5. THE FINAL CONNECTIONS TO EQUIPMENT SHALL BE LIQUIDTIGHT FLEXIBLE METAL CONDUIT. INSTALL WITH ENOUGH SLACK TO PRECLUDE VIBRATION TRANSMISSION. SUPPORT SHALL BE PER N.E.C. ARTICLE 351-8.
6. PROVIDE WEATHERPROOF AND EXTERIOR RATED DEVICES IN ALL EXTERIOR AREAS.
7. PROVIDE ALL DEVICES AS REQUIRED ON MECHANICAL CONTRACTOR SHOP DRAWINGS AND APPROVED SUBMITTALS.
8. NO CONDUIT/FEEDER SHALL BE PERMITTED ON THE ROOF WITH CRIPPLES, ALL FEEDERS SHALL BE RUN BENEATH THE ROOF.
9. ALL DISCONNECTS SHALL BE MOUNTED ON UNISTRUT ON AH OR EF UNITS.
10. CONTRACTOR SHALL VERIFY LOCATION & REQUIREMENTS OF ALL ELECTRICAL DEVICES PRIOR TO BID, ROUGH-IN & INSTALLATION.
11. CONTRACTOR SHALL, IN ROUTING ALL CIRCUITS, INCREASE CONDUCTOR & CONDUIT SIZE TO ALLOW FOR VOLTAGE DROP SHOULD THE CONTRACTOR EXCEED ROUTING INDICATED ON DRAWING. ENGINEER OF RECORD MUST BE NOTIFIED PRIOR TO ANY DEVIATIONS FROM APPROVED PLAN CHECK (PERMIT SET) DRAWINGS.
12. EACH DISCONNECT OR STARTER AND A SPARE SET OF FUSES SHALL BE CONTRACTOR PROVIDED.

KEY NOTES:

1 HOME RUN & CONTROLS PER E420 & MECHANICAL PLANS.

PAUL MURDOCH ARCHITECTS

6310 SAN VICENTE BLVD. SUITE 400
LOS ANGELES, CA 90048
T. 310 358-0993

THE DRAWINGS AND SPECIFICATIONS AND IDEAS, DESIGNS, AND ARRANGEMENTS REPRESENTED THEREBY ARE AND SHALL REMAIN THE PROPERTY OF THE ARCHITECT AND NO PART THEREOF SHALL BE COPIED, DISCLOSED TO OTHERS, OR USED IN CONNECTION WITH ANY WORK OR PROJECT OTHER THAN THE SPECIFIC PROJECT FOR WHICH THEY HAVE BEEN PREPARED AND DEVELOPED WITHOUT THE WRITTEN CONSENT OF THE ARCHITECT. VISUAL CONTACT WITH THESE DRAWINGS OR SPECIFICATIONS SHALL CONSTITUTE CONCLUSIVE EVIDENCE OF ACCEPTANCE OF THESE RESTRICTIONS. WRITTEN DIMENSIONS ON THESE DRAWINGS SHALL HAVE PRECEDENCE OVER SCALED DIMENSIONS. CONTRACTORS SHALL VERIFY AND BE RESPONSIBLE FOR ALL DIMENSIONS AND CONDITIONS ON THE JOB AND THIS OFFICE MUST BE NOTIFIED OF ANY VARIATIONS FROM THE DIMENSIONS AND CONDITIONS SHOWN BY THESE DRAWINGS. SHOP DETAILS MUST BE SUBMITTED TO THIS OFFICE FOR REVIEW BEFORE PROCEEDING WITH FABRICATION.

LUCCI & ASSOCIATES INC.
CONSULTING ELECTRICAL ENGINEERS
3251 CORTE MALPASO, #511
CAMARILLO, CA 93012-8094
(805) 389-6320 FAX (805) 389-6519

LUCCI & ASSOCIATES, INC. reserve their commonlaw copyright and other property rights in these plans, specifications, and designs. These plans, specifications, and designs are not to be reproduced, changed, or copied in any form or manner whatsoever without first obtaining the expressed written permission of Lucci and Associates. In the event of unauthorized reuse of these plans by any third party without obtaining said written permission and consent,

NO.	DATE	REVISION

allcove
BEACH CITIES HEALTH DISTRICT

100% PRELIMINARY DESIGN SUBMITTAL

PMA PROJECT NO.
23-727

DRAWING TITLE
SECOND LEVEL MECHANICAL POWER PLAN

SCALE
AS NOTED

DATE
02-28-2024

DRAWN D.S./L.K. CHECKED K.L.

SHEET NO.
E422

Copyright Lucci and Associates Consulting Electrical Engineers. Deviations from this drawing will not be made without their expressed written permission.

L.A.I.# 23-727 PAPER SIZE 42"x30"

DRAFTER: CM01 DRAWING FILENAME: 23-727 E422 PATHNAME: G:\23\727\EL\Sheets DATE: 27 February 2024 TIME: 3:35 pm

Drafter:CM01; Paper Size: 1.1,0
Drawing: G:\23\727\EL\Sheets\23-727 E421.Dwg
Wed 27 Mar, 2024 - 9:50am
Xref(s): 23-727 Base.Dwg
WBFB:G:\23\727\EL\Xrefs\23-727 TB.Dwg
WBFB:C:\Users\Public\Documents\Autodesk\ACAD 2018\Support\Acad.pmp (BAC.pmp)

Drafter: CM01; G:\23\727\EL\Sheets\23-727 E421.dwg; DATE: SEP 18, 2023 TIME: 9:49 AM

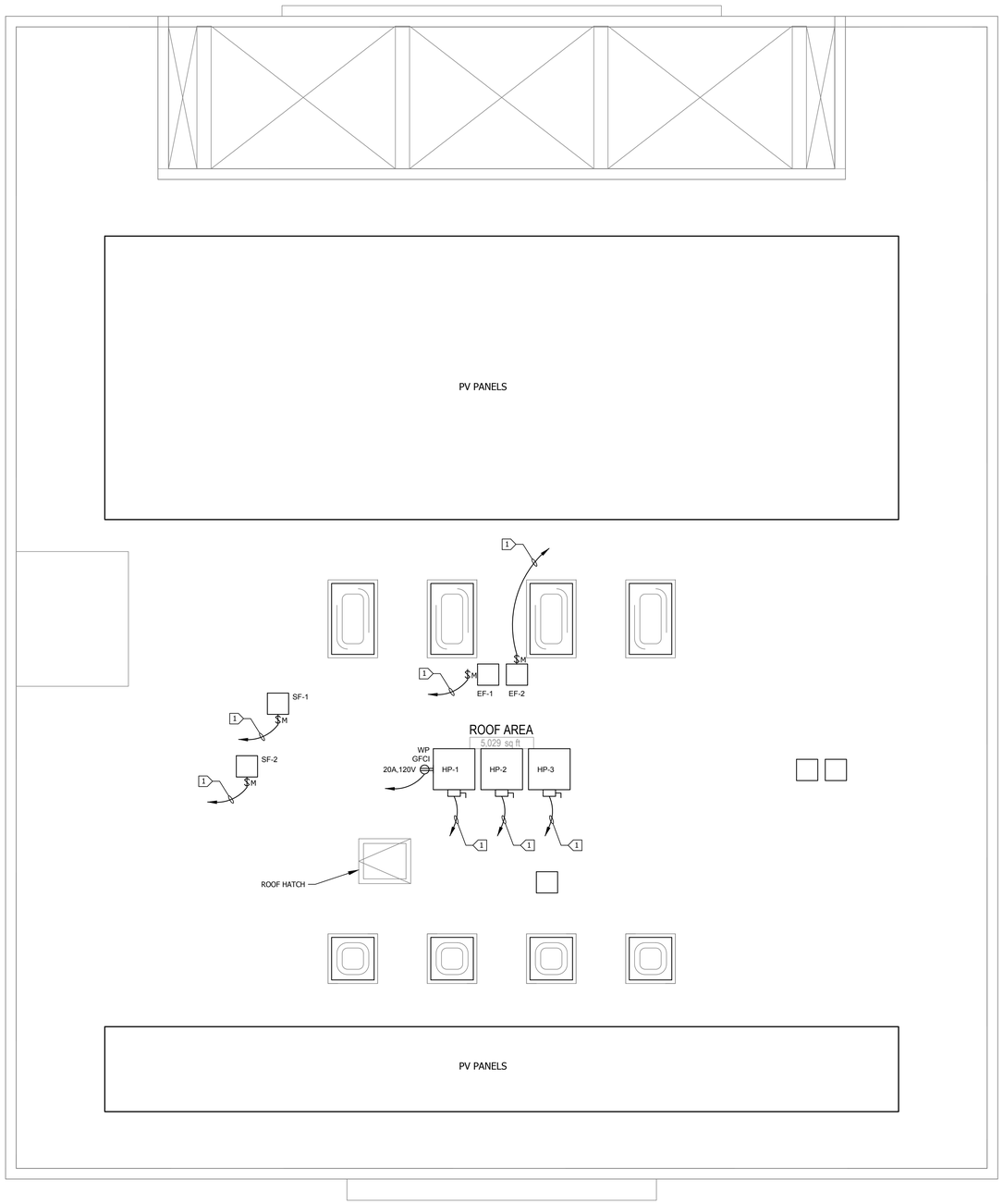

SCALE: 1/4"=1'-0"

0 2' 4' 8'

ROOF POWER PLAN

SCALE: 1/4"=1'-0"

1 - E423 -

N

SHEET NOTES:

1. COORDINATE MECHANICAL EQUIPMENT LOCATIONS.
2. SEE ELECTRICAL SCHEDULE PER MECHANICAL EQUIPMENT FOR ELECTRICAL REQUIREMENTS.
3. ALL WORK SHALL BE COORDINATED WITH OTHER TRADES.
4. THE LOCATION OF ALL ROOF PENETRATIONS SHALL BE COORDINATED WITH THE ARCHITECTURAL, MECHANICAL, AND STRUCTURAL DRAWINGS.
5. THE FINAL CONNECTIONS TO EQUIPMENT SHALL BE LIQUIDTIGHT FLEXIBLE METAL CONDUIT. INSTALL WITH ENOUGH SLACK TO PRECLUDE VIBRATION TRANSMISSION. SUPPORT SHALL BE PER N.E.C. ARTICLE 351-8.
6. PROVIDE WEATHERPROOF AND EXTERIOR RATED DEVICES IN ALL EXTERIOR AREAS.
7. PROVIDE ALL DEVICES AS REQUIRED ON MECHANICAL CONTRACTOR SHOP DRAWINGS AND APPROVED SUBMITTALS.
8. NO CONDUIT/FEEDER SHALL BE PERMITTED ON THE ROOF WITH CRIPPLES, ALL FEEDERS SHALL BE RUN BENEATH THE ROOF.
9. ALL DISCONNECTS SHALL BE MOUNTED ON UNISTRUT ON AH OR EF UNITS.
10. CONTRACTOR SHALL VERIFY LOCATION & REQUIREMENTS OF ALL ELECTRICAL DEVICES PRIOR TO BID, ROUGH-IN & INSTALLATION.
11. CONTRACTOR SHALL, IN ROUTING ALL CIRCUITS, INCREASE CONDUCTOR & CONDUIT SIZE TO ALLOW FOR VOLTAGE DROP SHOULD THE CONTRACTOR EXCEED ROUTING INDICATED ON DRAWING. ENGINEER OF RECORD MUST BE NOTIFIED PRIOR TO ANY DEVIATIONS FROM APPROVED PLAN CHECK (PERMIT SET) DRAWINGS.
12. EACH DISCONNECT OR STARTER AND A SPARE SET OF FUSES SHALL BE CONTRACTOR PROVIDED.

KEY NOTES:

1 HOME RUN & CONTROLS PER E420 & MECHANICAL PLANS.

PAUL MURDOCH ARCHITECTS

6310 SAN VICENTE BLVD. SUITE 400
LOS ANGELES, CA 90048
T. 310 358-0993

THE DRAWINGS AND SPECIFICATIONS AND IDEAS, DESIGNS, AND ARRANGEMENTS REPRESENTED THEREBY ARE AND SHALL REMAIN THE PROPERTY OF THE ARCHITECT AND NO PART THEREOF SHALL BE COPIED, DISCLOSED TO OTHERS, OR USED IN CONNECTION WITH ANY WORK OR PROJECT OTHER THAN THE SPECIFIC PROJECT FOR WHICH THEY HAVE BEEN PREPARED AND DEVELOPED WITHOUT THE WRITTEN CONSENT OF THE ARCHITECT. VISUAL CONTACT WITH THESE DRAWINGS OR SPECIFICATIONS SHALL CONSTITUTE CONCLUSIVE EVIDENCE OF ACCEPTANCE OF THESE RESTRICTIONS. WRITTEN DIMENSIONS ON THESE DRAWINGS SHALL HAVE PRECEDENCE OVER SCALED DIMENSIONS. CONTRACTORS SHALL VERIFY AND BE RESPONSIBLE FOR ALL DIMENSIONS AND CONDITIONS ON THE JOB AND THIS OFFICE MUST BE NOTIFIED OF ANY VARIATIONS FROM THE DIMENSIONS AND CONDITIONS SHOWN BY THESE DRAWINGS. SHOP DETAILS MUST BE SUBMITTED TO THIS OFFICE FOR REVIEW BEFORE PROCEEDING WITH FABRICATION.

LUCCI & ASSOCIATES
CONSULTING ELECTRICAL ENGINEERS
3251 CORTE MALPASO, #511
CAMARILLO, CA 93012-8094
(805) 389-6520 FAX (805) 389-6519

LUCCI & ASSOCIATES, INC. reserve their commonlaw copyright and other property rights in these plans, specifications, and designs. These plans, specifications, and designs are not to be reproduced, changed, or copied in any form or manner whatsoever without first obtaining the expressed written permission of Lucci and Associates. In the event of unauthorized reuse of these plans, specifications, and designs by any third party without obtaining said written permission and consent,

NO.	DATE	REVISION

allcove
BEACH CITIES HEALTH DISTRICT

100% PRELIMINARY DESIGN SUBMITTAL

PMA PROJECT NO.
23-727

DRAWING TITLE
ROOF POWER PLAN

SCALE
AS NOTED

DATE
02-28-2024

DRAWN D.S./L.K. CHECKED K.L.

SHEET NO.
E423

Copyright Lucci and Associates Consulting Electrical Engineers. Deviations from this drawing will not be made without their expressed written permission.

L.A.I.# 23-727 PAPER SIZE 42"x30"

DRAFTER: CM01 DRAWING FILENAME: 23-727 E423 PATHNAME: G:\23\727\EL\Sheets DATE: 27 February 2024 TIME: 3:35 pm

DRAFTER: CM01 DRAWING FILENAME: 23-727 E600 PATHNAME: G:\23\727\EL\Sheets DATE: 27 February 2024 TIME: 3:35 pm

GENERAL NOTES

1. ALL WORK SHALL CONFORM WITH THE 2022 CALIFORNIA BUILDING CODE, AND ALL LOCAL ORDINANCES.
2. THE CONTRACTOR SHALL VERIFY ALL DIMENSIONS AND CONDITIONS PRIOR TO STARTING CONSTRUCTION AND BRING TO THE ATTENTION OF THE ENGINEER ANY DISCREPANCIES OR INCONSISTENCIES.
3. NO STRUCTURAL MEMBER SHALL BE CUT, NOTCHED, BORED OR OTHER-WISE WEAKENED EXCEPT AS ALLOWED BY THE CALIFORNIA BUILDING CODE OR APPROVED BY THE ENGINEER.
4. THE ENGINEER SHALL BE NOTIFIED OF ANY UNUSUAL OR UNFORSEEN CONDITION WHICH EFFECTS THE STRUCTURAL STABILITY OF THE BUILDING PRIOR TO CONTINUING WITH CONSTRUCTION. SHOULD ANY CONDITION ARISE WHERE THERE APPEARS TO BE AN ERROR ON THE DRAWINGS OR A DISCREPANCY BETWEEN THE DRAWINGS AND CONDITIONS IN THE FIELD, THE ENGINEER SHALL BE NOTIFIED PRIOR TO CONTINUING WITH THE WORK.
5. IN THE CASE WHERE TWO OR MORE DETAILS APPLYING TO THE SAME PART OF THE WORK ARE IN CONFLICT, THE MOST RESTRICTIVE SHALL GOVERN UNLESS CLARIFIED OR OTHERWISE APPROVED BY THE ENGINEER.
6. REVIEW OF SHOP DRAWINGS MEANS REVIEW OF GENERAL METHOD OF FABRICATION ONLY. DIMENSIONS AND QUANTITIES MAY NOT BE CHECKED, AND REVIEW OF THE SHOP DRAWINGS DOES NOT RELIEVE THE CONTRACTOR FROM COMPLIANCE WITH THE CONSTRUCTION DOCUMENTS UNLESS SPECIFICALLY SO INDICATED IN THE REVIEW.
7. THE ENGINEER HAS NOT BEEN RETAINED FOR SUPERVISION OR INSPECTION DURING CONSTRUCTION, BUT WILL RESOLVE STRUCTURAL ITEMS BROUGHT TO HIS ATTENTION DURING CONSTRUCTION.
8. THE CONTRACTOR SHALL BE RESPONSIBLE FOR ALL SHORING AND BRACING REQUIRED TO PROTECT PERSONNEL AND ADJACENT PROPERTY DURING CONSTRUCTION. THE CONTRACTOR SHALL ADEQUATELY BRACE ELEMENTS OF THE STRUCTURE DURING CONSTRUCTION TO INSURE THE SAFETY OF THE STRUCTURE.
9. (E) INDICATES EXISTING CONDITION OR MEMBER, (N) NEW.

FOUNDATION

1. THERE IS NO SILS REPORT FOR THIS PROJECT AND AN ASSUMED SOIL BEARING VALUE OF 1,000 PSF, (NET), HAS BEEN USED IN THE DESIGN OF THE A/C PAD.
2. THE NEW GENERATOR PAD/MAT SHALL BEAR A MINIMUM OF 8" INTO FIRM, UNDISTURBED SOILS. THE CONTRACTOR SHALL RECOMPACT THE SOILS UNDERNEATH THE NEW PAD/MAT AS NECESSARY.

CONCRETE

1. ALL CONCRETE UNLESS OTHERWISE SHOWN ON THE PLANS SHALL BE HARDROCK CONFORMING TO ASTM C-94 WITH A MINIMUM COMPRESSIVE STRENGTH AT 28 DAYS OF F'c = 3,000 PSI.
2. AGGREGATE FOR THE CONCRETE SHALL CONFORM TO ASTM C-33, INCLUDING APPENDIX "X1".
3. THE CONTRACTOR SHALL TAKE ADEQUATE PRECAUTIONS FOR MIXING, PLACING, FINISHING, CURING, AND PROTECTING CONCRETE DURING UNFAVORABLE WEATHER CONDITIONS.
4. ALL REINFORCING STEEL SHALL BE NEW STOCK DEFORMED BAR CONFORMING TO ASTM A-615, GRADE 60 EXCEPT#3 BARS MAY BE GRADE 40.. ALL WELDED REINF. STEEL SHALL BE ASTM- A706. ALL BARS SHALL BE FREE OF RUST, GREASE, MILL SCALE OR ANY OTHER MATERIALS WHICH MIGHT AFFECT ITS BOND TO THE CONCRETE ALL BAR BENDS SHALL BE MADE COLD.
5. PROVIDE 3/4" CHAMFER ON ALL EXPOSED CORNERS.
6. BAR SPLICES SHALL BE LAP SPLICES w/ MIN. 40 BAR DIAM. LAP w/ AN 18" MINIMUM, (WHICHEVER IS GREATER). STAGGER LAP SPLICES OF MULTIPLE BARS, (i.e. IN CONT. FOOTING w/ 2 HORIZ. BARS TOP AND BOTTOM STAGGER TOP BAR LAP SPLICES AND STAGGER BOTTOM BAR LAP SPLICES- SPLICES DO NOT HAVE TO BE STAGGERED BETWEEN TOP AND BOTTOM BARS).
7. REINFORCING BARS SHALL HAVE THE FOLLOWING CONCRETE COVER, (UNLESS NOTED OTHERWISE IN DETAILS):
   CONCRETE POURED AGAINST EARTH..................3 INCHES
   CONCRETE BEAMS AND COLUMNS.......................2 INCHES
   CONCRETE SLABS ABOVE GRADE........................1 INCH
8. DRYPACK SHALL BE MIXED IN THE PROPORTIONS OF 1 PART PORTLAND CEMENT TO 2-1/2 PARTS SAND WITH ENOUGH WATER TO PRODUCE A STIFF MIX. DRYPACK SHALL BE THOROUGHLY TAMPED INTO PLACE TO ENSURE A DENSE FINISH, FREE OF VOIDS.
9. THE SLUMP OF THE CONCRETE SHALL BE THE MINIMUM THAT IS PRACTICABLE. WHEN VIBRATORS ARE USED TO CONSOLIDATE THE CONCRETE, THE SLUMP SHALL NOT EXCEED 4 INCHES, OTHERWISE THE SLUMP SHALL NOT EXCEED 6 INCHES.
10. ALL CONCRETE SHALL BE ADEQUATELY CONSOLIDATED DURING PLACEMENT AND ALL REINFORCING STEEL AND EMBEDDED ITEMS SHALL BE SECURELY TIED IN PLACE TO PREVENT DISPLACEMENT DURING CONCRETE PLACEMENT.
11. EXCEPT WHERE INDICATED OTHERWISE, ALL REINFORCING STEEL SHALL BE BENT AND PLACED IN ACCORDANCE WITH THE "CODE OF STANDARD PRACTICE AND THE SPECIFICATIONS FOR PLACING REINFORCING STEEL" OF THE CONCRETE REINFORCING STEEL INSTITUTE.

SPECIAL INSPECTIONS

PROVIDE SPECIAL INSPECTION BY A LICENSED DEPUTY INSPECTOR APPROVED BY THE LOCAL BUILDING OFFICAL FOR THE FOLLOWING WORK IN ACCORDANCE WITH THE REQUIREMENTS OF CHAPTER 17 OF THE CALIFORNIA BUILDING CODE:

1. FOR ALL "POST INSTALLED" ANCHORS, (MECHANICAL EXPANSION BOLTS AND EPOXIED THREADED RODS ANCHOR).

EQUIPMENT ANCHORAGE

THE EQUIPMENT SHALL BE ANCHORED TO THE NEW 8" THICK CONCRETE MAT/SLAB WITH SIMPSON STRONG-BOLT 2 STAINLESS STEEL WEDGE ANCHORS PLACED IN THE EXISTING HOLES AT THE BASE OF THE EQUIPMENT PER THE TABLES BELOW:

SIMPSON STAINLESS STEEL STRONG-BOLT 2

PRE-DRILLED HOLE SIZE IN EQUIP. BASE	ANCHOR SIZE	MIN. HOLE DEPTH	NOMINAL EMBED. DEPTH	TORQUE (FT. LB.)
0.69" DIAM.	5/8" DIAM.	5"	4-3/8 "	80

ALL ANCHORS SHALL BE STANLESS STEEL SIMPSON STRONG-BOLT 2 EXPANSION ANCHORS INSTALLED PER ICC-ESR - 3037 w/ SPECIAL INSPECTION REQUIRED BY A LICENSED DEPUTY INSPECTOR

THE CONTRACTOR SHALL LOCATE ALL EXISTING SLAB HORIZONTAL REINFORCING STEEL PRIOR TO DRILLING FOR EXPANSION ANCHORS TO AVOID DAMAGING SLAB REINF. STEEL.

UNDERGROUND SERVICE ALERT
CALL BEFORE YOU DIG
CALL :TOLL FREE 1-800-227-2600
TWO WORKING DAYS BEFORE YOU DIG

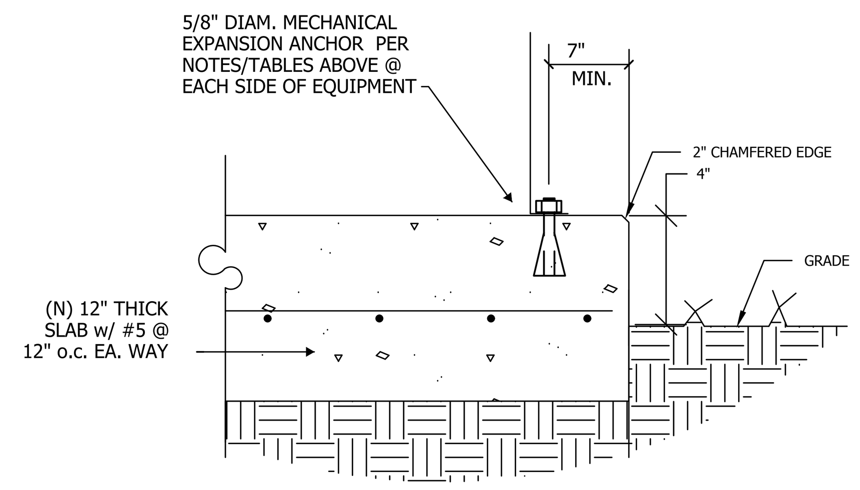

EQUIPMENT INSTALLATION 7

SCALE: NTS FOR FLOOR MOUNTED ELECTRICAL EQUIPMENT - E600

DETAIL NOTES:

1. CONCRETE-ENCASED ELECTRODE: AN ELECTRODE ENCASED BY AT LEAST 2 INCHES (50.8MM) OF CONCRETE. LOCATED WITHIN AND NEAR THE BOTTOM OF A CONCRETE FOUNDATION OR FOOTING THAT IS IN DIRECT CONTACT WITH THE EARTH, CONSISTING OF AT LEAST 20 FEET (6.1 M) OF ONE OR MORE BARE OR ZINC GALVANIZED OR OTHER ELECTRICALLY CONDUCTIVE COATED STEEL REINFORCING BARS OR RODS OF NOT LESS THAN 1//2 INCH (12.7 MM) DIAMETER, OR CONSISTING OF AT LEAST 20 FEET (6.1 M) OF BARE COPPER CONDUCTOR NOT SMALLER THAN NO. 4, SEE PLANS FOR SIZE OF CONDUCTOR IF GREATER THEN #4.

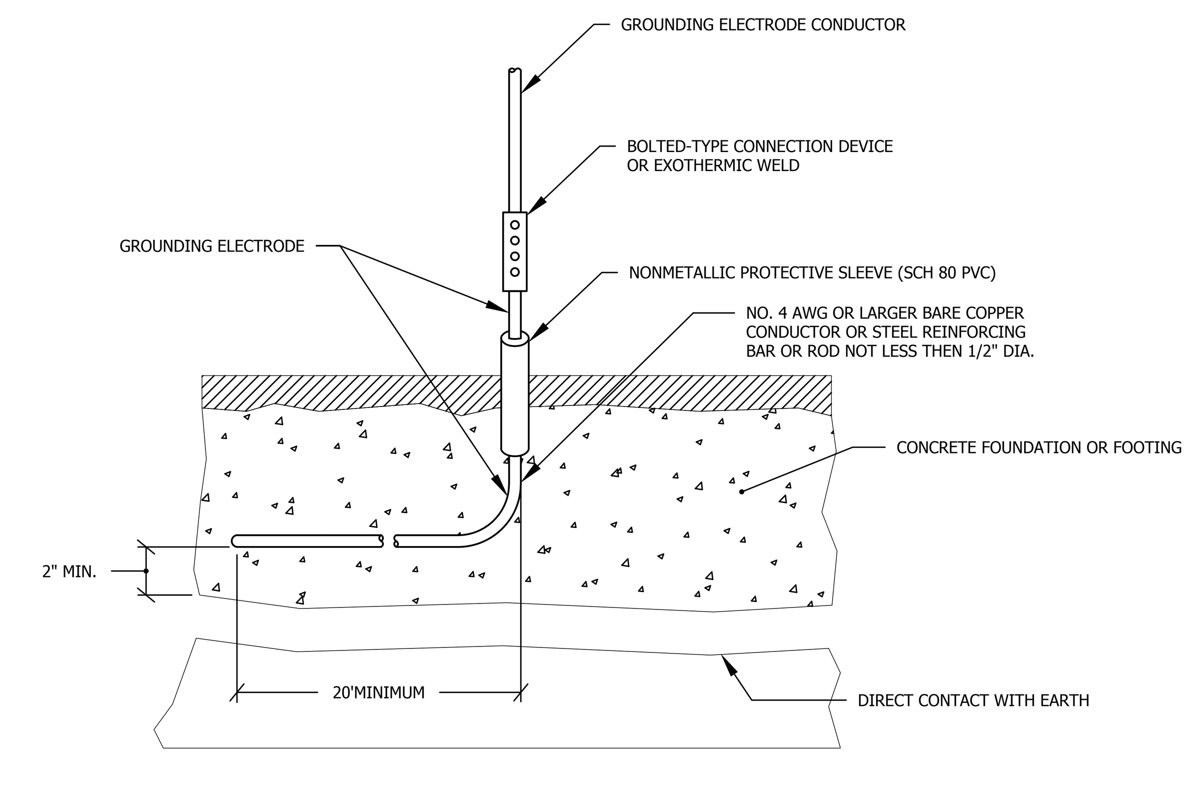

UFER GROUND DETAIL 3

SCALE: NONE - E600

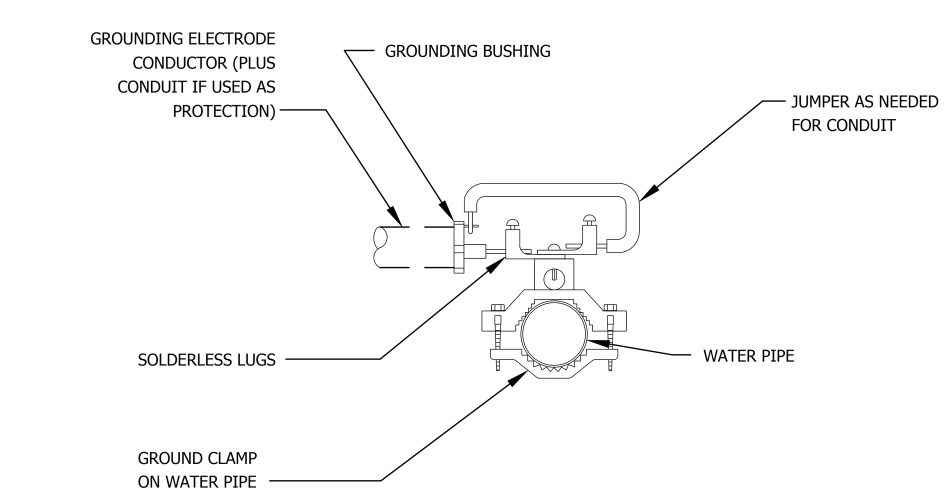

COLD WATER BONDING DETAIL 2

SCALE: NONE - E600

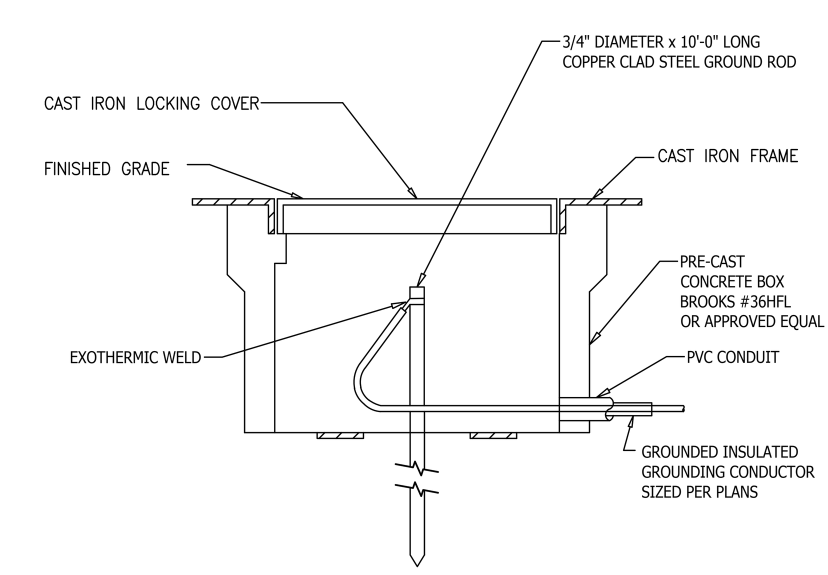

GROUND WELL DETAIL 1

SCALE: NONE - E600

PAUL MURDOCH ARCHITECTS
6310 SAN VICENTE BLVD. SUITE 400
LOS ANGELES, CA 90048
T. 310 358-0993

THE DRAWINGS AND SPECIFICATIONS AND IDEAS, DESIGNS, AND ARRANGEMENTS REPRESENTED THEREBY ARE AND SHALL REMAIN THE PROPERTY OF THE ARCHITECT, AND NO PART THEREOF SHALL BE COPIED, DISCLOSED TO OTHERS, OR USED IN CONNECTION WITH ANY WORK OR PROJECT OTHER THAN THE SPECIFIC PROJECT FOR WHICH THEY HAVE BEEN PREPARED AND DEVELOPED WITHOUT THE WRITTEN CONSENT OF THE ARCHITECT. VISUAL CONTACT WITH THESE DRAWINGS OR SPECIFICATIONS SHALL CONSTITUTE CONCLUSIVE EVIDENCE OF ACCEPTANCE OF THESE RESTRICTIONS. WRITTEN DIMENSIONS ON THESE DRAWINGS SHALL HAVE PRECEDENCE OVER SCALED DIMENSIONS. CONTRACTORS SHALL VERIFY AND BE RESPONSIBLE FOR ALL DIMENSIONS AND CONDITIONS ON THE JOB AND THIS OFFICE MUST BE NOTIFIED OF ANY VARIATIONS FROM THE DIMENSIONS AND CONDITIONS SHOWN BY THESE DRAWINGS. SHOP DETAILS MUST BE SUBMITTED TO THIS OFFICE FOR REVIEW BEFORE PROCEEDING WITH FABRICATION.

LUCCI & ASSOCIATES INC.
CONSULTING ELECTRICAL ENGINEERS
3251 CORTE MALPASO, #511
CAMARILLO, CA 93012-8094
(805) 389-6520 FAX (805) 389-6519

LUCCI & ASSOCIATES, INC. reserve their commonlaw copyright and other property rights in these plans. These plans and drawings are not to be reproduced, changed, or copied in any form or manner whatsoever without first obtaining the expressed written permission and consent of LUCCI & ASSOC. INC nor are they to be assigned to any third party without obtaining said written permission and consent.

NO.	DATE	REVISION

allcove
BEACH CITIES HEALTH DISTRICT

100% PRELIMINARY DESIGN SUBMITTAL

PMA PROJECT NO.: 23-727

DRAWING TITLE: ELECTRICAL DETAILS

SCALE: AS NOTED

DATE: 02-28-2024

DRAWN: D.S./L.K. CHECKED: K.L.

SHEET NO.: E600

Copyright Lucci and Associates Consulting Electrical Engineers. Deviations from this drawing will not be made without their expressed written permission.

L.A.I.# 23-727 PAPER SIZE 42"x30"

Drafter: CM01 Paper Size: 12,9
Drawing: G:\23\727\EL\Sheets\23-727 E600.dwg
Feb 27, 2024, 3:35pm
Attached XREFS:
XREF: G:\23\727\EL\Xrefs\23-727 TB.dwg
Drafter: CM01: G:\23\727\EL\Sheets\23-727 E600.dwg; DATE: SEP 15, 2023 TIME: 3:18 PM

DRAFTER: CM01 DRAWING FILENAME: 23-727 E601 PATHNAME: G:\23\727\EL\Sheets DATE: 27 February 2024 TIME: 3:35 pm

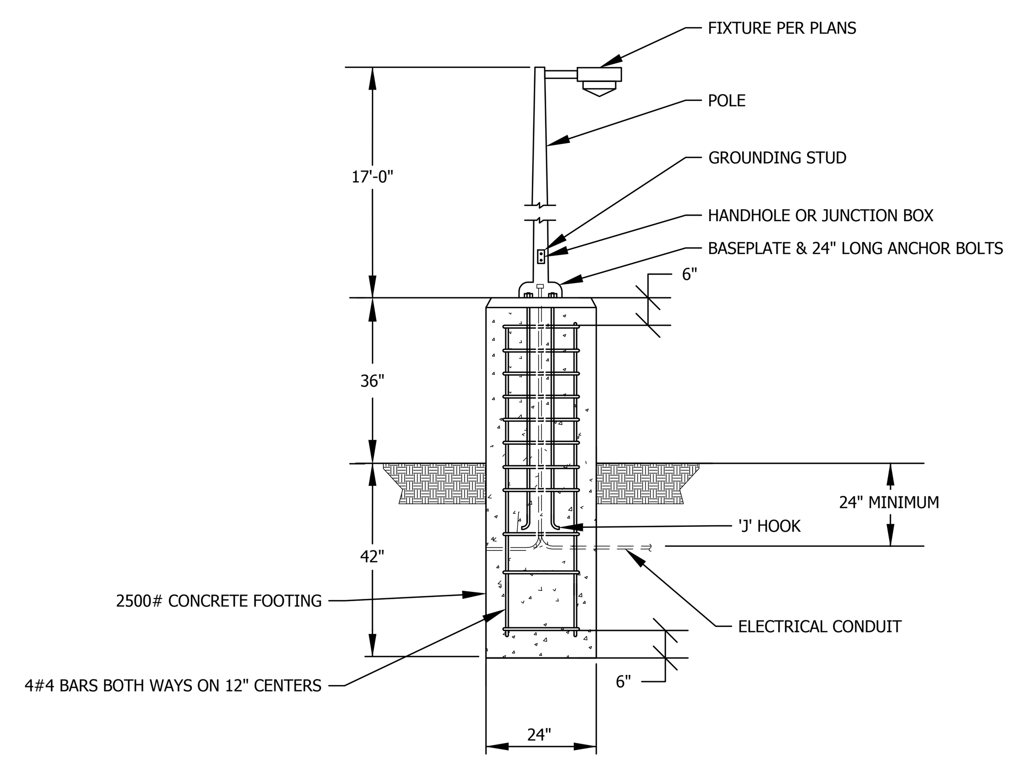

NEW POLE / LIGHT PER FIXTURE SCHEDULE (2 / E601)

SCALE: NONE

NOTE:

1. ALL CONDUCTORS EXPOSED ABOVE FINISHED FLOOR TERMINATING ON GROUND BUS SHALL BE PROTECTED BY SCHEDULE 80 PVC CONDUIT WITH BELL ENDS TO 6" ABOVE FLOOR.

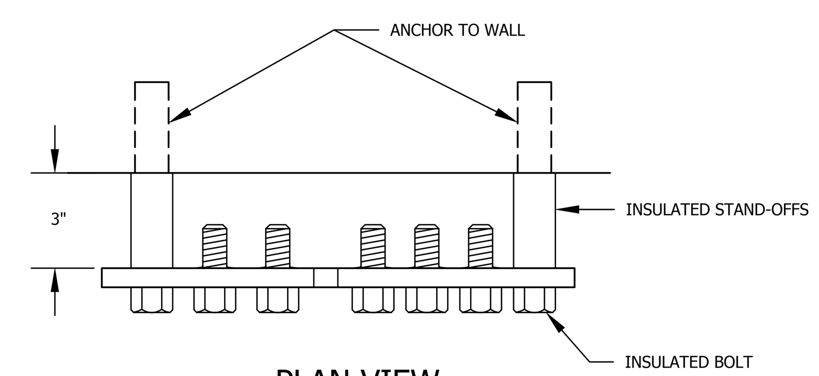

PLAN VIEW

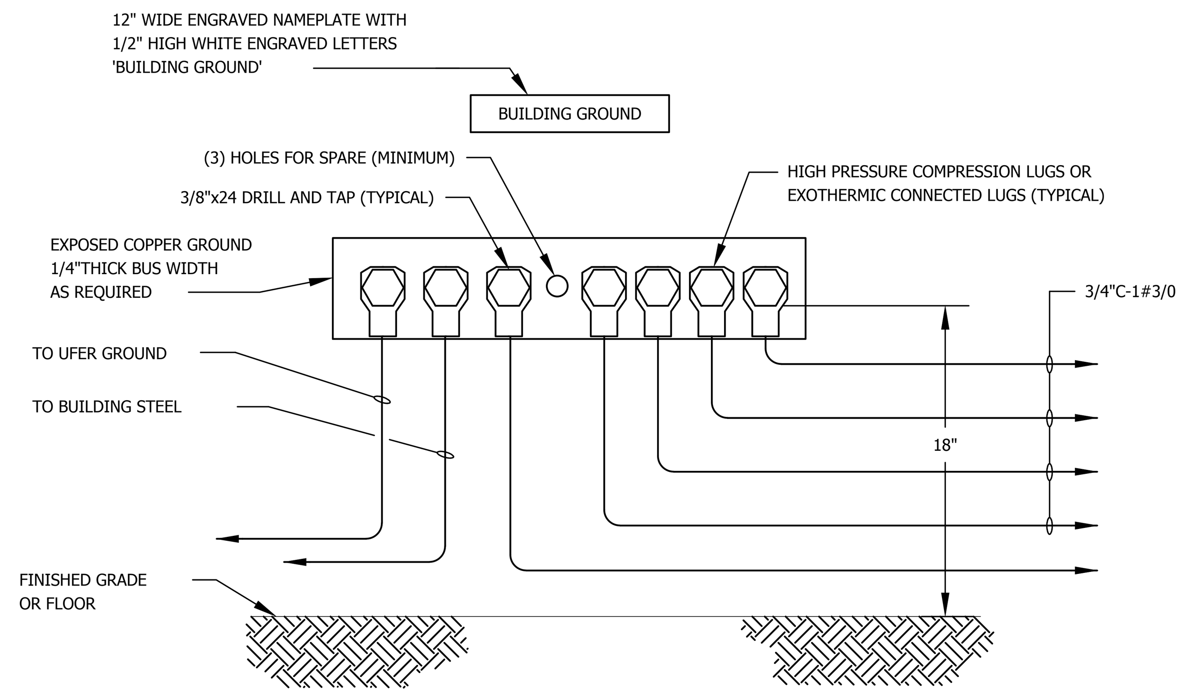

ELEVATION

TYPICAL GROUND BUS BAR DETAIL (1 / E601)

SCALE: NONE

MYERS
EMERGENCY POWER SYSTEMS

Illuminator IE
Emergency Lighting Inverter System

Single Phase Interruptible Power Systems
1.5KVA/KW to 16.7KVA/KW For LED & All Other Non-HID Lighting Loads

Models 1.5KVA to 5.0KVA

Models 6.0KVA to 16.7KVA

STANDARD FEATURES

- 98% Efficient (Typical)
- PWM/IGBT Technology
- Micro-Processor Control
- User Programmable with Password Protection
- UL 924 Listed
- Automatic Event, Test and Alarm Log
- RS232 Communications Port
- Input Circuit Breaker
- 50ms Transfer Time
- Low Audible Noise
- Normally Off Output
- Space-Saving, Single Cabinet Design
- 65kAIC Interrupting Rating

OPTIONAL FEATURES

- Enhanced Communications
  - Expanded Building Management Protocols
  - BACnet or Modbus Communications Interface
  - **NEW IoT Connect Cloud Software**
- Internal Maintenance Bypass
- Summary Fault Form C Dry Contacts
- Fast Charge
- Remote Meter Panel
- Output Circuit Breakers
- Extended Factory Warranty
- Factory Startup and Training
- Output Trip Alarms
- Remote Summary Alarm Panel

SPECIFICATIONS

- Input 120 or 277VAC 1 Phase 2 Wire Plus Ground
- Output 120 or 277VAC 1 Phase 2 Wire Plus Ground
- Output Load Power Factor .5 Lag to.5 Lead
- Compatible with all LED Drivers
- Forced Air Cooling Only During Emergency Operation; No Filters Required
- Output Distortion Less than 3% THD for Linear Loads
- Compatible with Generators (10x Inverter Size)
- Custom Voltages Available
- 90 Minute Runtime Standard; Other Runtimes Available upon Request

ORDERING GUIDE

Example Model Number:
1-IE-4-S-BA2007-T-S-M-2YW

VOLTAGE INPUT/OUTPUT [1]
1 - 120 - 120
2 - 120 - 120/277
3 - 208 - 120
4 - 240 - 120/240
5 - 277 - 120
6 - 277 - 277
7 - 277 - 277/120
8 - 208 - 120/240
9 - 347 - 347
A - 208 - 120/208
Z - Other Voltages (May Require UL Testing)

SYSTEM TYPE
IE - Illuminator IE

KVA / KW [2]
1 - 1.5
2 - 2.25
3 - 3.0
4 - 3.75
5 - 5.0
6 - 6.0
7 - 8.0
8 - 10.0
9 - 12.5
10 - 16.7

BATTERY TYPE
S - 10 year warranted
G - 20 year warranted, (not 20 year battery)

RUNTIME[3]
(other than 90 minutes)
R120 - 120 Minutes

OUTPUT BREAKERS[5]
EXAMPLE B A 20 07
OUTPUT: B - Normally On; N - Normally Off[4]
VOLTAGE: A - 120; B - 208; C - 240; D - 277; Z - Other
QUANTITY[5] 01-24[5] (16)
AMP RATING (Distribution Breakers): 10, 16, 20, 25, 32, 40, 50, 63

OPTIONS
(Not all options are described in UL file)
Pick Any:
A - Remote Summary Alarm Panel
BL - Circuit Breaker Locks
BTM - Battery Temperature Monitor
C - Status Monitoring Contacts
DT - Drip Top (NEMA 2)
F - Fast Charge
H - OSHPD "Withstand" Seismic
I - Inverter on Dry Form C Contact
L - Load Control Relay (Line Voltage Dimmer or Switch Bypass)
M - Maintenance Bypass[6]
M(BBM) - Internal Maintenance Bypass[6]
O - Output Transfer Delay (Factory set at 3 seconds; adjustable 0 to 7.5 seconds)
P - Remote Status Panel (Status Alarms, Requires C Option)
R - Remote Meter Panel
S - Summary Fault Form C Contacts
SEA - Serial to Ethernet Adapter
T - Output Trip (Supervised) Alarm[5]
V - Time Delay 15 Minutes[9]
Z - Seismic Mounting[8]
ZM - Zone Monitoring (Quantity Must Be Specified)

Pick 1:
BAC - BACnet Communications (MSTP)
BIP - BACnet IP
IOT - IoT Inverter Connect Cloud Software
MIP - Modbus TCP/IP
MOD - Modbus RTU

ONSITE SERVICES & WARRANTY[7]
2YW - Start Up & Same Day Training
2YWT - Start Up, Same Day Training and Full Run Test
5YP - 5-Year Preventative Maintenance Plan
5YW - 5-Year Extended Electronics Warranty
TR - Training if required on day other than startup

1. Only single phase voltages available.
2. KVA= KW
3. Standard battery runtime is 90 minutes. Contact factory for other runtimes. 120-minute run time is not available for 16.7KVA systems.
4. Normally off loads cannot exceed 20% of total KVA rating with any combination of HID loads.
5. Maximum output breakers available: 12 unsupervised (1-pole), 8 supervised (1-pole) for 1.5KVA-5KVA; 24 unsupervised (1-pole), 18 supervised (1-pole) for 6KVA-16.7KVA; Breakers provided are 20 Amps unless specified otherwise. A 2-pole breaker occupies 2 positions. Additional output breakers available on 1.5-kva units with optional top mount enclosure. Contact factory for details.
6. Maintenance bypass switch is a "make before break".
7. One year warranty is standard.
8. Anchorage based on calculations. For systems requiring OSHPD/Withstand testing, please contact the factory.
9. 15 minute retransfer time delay of normally off circuit after return of utility.

ACCESSORIES
EMBP - External Maintenance Bypass Switch [A,6]
SPARES - Spare Fuses & Circuit Boards
SPAREF - Spare Fuse Kit

A) Cannot purchase External Maintenance Bypass Switch with Internal Output Breaker options.

= Required feature for part number.

= Optional feature. Not required for part number.

DIMENSIONS

Electronics Module					Cabinet Dimensions				Batteries 90 Minutes @ Full Load				
Model Number	Power Rating (KVA / KW)	Efficiency (%)	Audible Noise (db)	Heat Loss (BTU)	Width (in / cm)	Height (in / cm)	Depth (in / cm)	Weight (lbs / kg)	90 Minutes Batteries (lbs / kg)	Number of Batteries	Voltage (VDC)	Current (amps)	Total System Weight (lbs / kg)
IE-1-S	1.5	98	45	102	30 / 77	47 / 119	25 / 64	215 / 98	296 / 135	4	48	39	511 / 230
IE-2-S	2.25	98	45	153	30 / 77	47 / 119	25 / 64	230 / 105	444 / 200	6	72	38	679 / 306
IE-3-S	3.0	98	45	204	30 / 77	47 / 119	25 / 64	235 / 107	592 / 266	8	96	38	827 / 372
IE-4-S	3.75	98	45	255	30 / 77	47 / 119	25 / 64	240 / 109	740 / 330	10	120	37	980 / 441
IE-5-S	5.0	98	45	340	30 / 77	47 / 119	25 / 64	280 / 128	888 / 400	12	144	40	1168 / 525
IE-6-S	6.0	98	45	408	48 / 122	76 / 193	25 / 64	605 / 272	1110 / 500	15	180	40	1715 / 772
IE-7-S	8.0	98	45	544	48 / 122	76 / 193	25 / 64	640 / 288	1480 / 666	20	240	39	2120 / 954
IE-8-S	10.0	98	45	680	48 / 122	76 / 193	25 / 64	785 / 353	1776 / 800	24	144	82	2561 / 1153
IE-9-S	12.5	98	45	860	48 / 122	76 / 193	25 / 64	805 / 362	2220 / 999	30	180	82	3025 / 1361
IE-10-S	16.7	98	45	1135	48 / 122	76 / 193	25 / 64	885 / 398	2960 / 1332	40	240	80	3845 / 1730

PAUL MURDOCH ARCHITECTS
6310 SAN VICENTE BLVD. SUITE 400
LOS ANGELES, CA 90048
T. 310 358-0993

THE DRAWINGS AND SPECIFICATIONS AND IDEAS, DESIGNS, AND ARRANGEMENTS REPRESENTED THEREBY ARE AND SHALL REMAIN THE PROPERTY OF THE ARCHITECT, AND NO PART THEREOF SHALL BE COPIED, DISCLOSED TO OTHERS, OR USED IN CONNECTION WITH ANY WORK OR PROJECT OTHER THAN THE SPECIFIC PROJECT FOR WHICH THEY HAVE BEEN PREPARED AND DEVELOPED WITHOUT THE WRITTEN CONSENT OF THE ARCHITECT. VISUAL CONTACT WITH THESE DRAWINGS OR SPECIFICATIONS SHALL CONSTITUTE CONCLUSIVE EVIDENCE OF ACCEPTANCE OF THESE RESTRICTIONS. WRITTEN DIMENSIONS ON THESE DRAWINGS SHALL HAVE PRECEDENCE OVER SCALED DIMENSIONS. CONTRACTORS SHALL VERIFY AND BE RESPONSIBLE FOR ALL DIMENSIONS AND CONDITIONS ON THE JOB AND THIS OFFICE MUST BE NOTIFIED OF ANY VARIATIONS FROM THE DIMENSIONS AND CONDITIONS SHOWN BY THESE DRAWINGS. SHOP DETAILS MUST BE SUBMITTED TO THIS OFFICE FOR REVIEW BEFORE PROCEEDING WITH FABRICATION.

LUCCI & ASSOCIATES INC.
CONSULTING ELECTRICAL ENGINEERS
3251 CORTE MALPASO, #511
CAMARILLO, CA 93012-8094
(805) 389-6520 FAX (805) 389-6519

LUCCI & ASSOCIATES, INC. reserve their commonlaw copyright and other property rights in these plans. These plans and drawings are not to be reproduced, changed, or copied in any form or manner whatsoever without first obtaining the expressed written permission and consent of LUCCI & ASSOC. INC nor are they to be assigned to any third party without obtaining said written permission and consent.

NO. DATE REVISION

allcove
BEACH CITIES HEALTH DISTRICT

100% PRELIMINARY DESIGN SUBMITTAL

PMA PROJECT NO. 23-727

DRAWING TITLE: ELECTRICAL DETAILS

SCALE: AS NOTED

DATE: 02-28-2024

DRAWN: D.S./L.K. CHECKED: K.L.

SHEET NO. E601

Copyright Lucci and Associates Consulting Electrical Engineers. Deviations from this drawing will not be made without their expressed written permission. L.A.I.# 23-727 PAPER SIZE 42"x30"

Drafter:CM01 Paper Size: 12,9
Drawing:G:\23\727\EL\Sheets\23-727 E601.dwg
Feb 27, 2024, 3:35pm
Attached XREFS:
XREF:G:\23\727\EL\Xrefs\23-727 TB.dwg
Drafter: CM01: G:\23\727\EL\Sheets\23-727 E601.dwg: DATE: FEB 26, 2024 TIME: 4:21 PM

BEACH CITIES HEALTH DISTRICT
ALLCOVE
REDONDO BEACH, CA

GENERAL NOTES

REFER TO AUDIO VISUAL SPECIFICATION SECTION FOR COMPLETE REQUIREMENTS

1. ELECTRICAL

A. ALL CONDUITS, JUNCTION BOXES, BACK BOXES, PULL STRING AND POWER OUTLETS BY DIVISION 26 CONTRACTOR AS REQUIRED.
B. ELECTRICAL CONTRACTOR TO PROVIDE PULLSTRING ON ALL AV CONDUIT.
C. ALL POWER TO AV EQUIPMENT TO ORIGINATE FROM DEDICATED AUDIO VIDEO LOAD CENTER IN ACCORDANCE WITH THE LATEST LOCAL AND NATIONAL CODES REFERENCING "TECHNICAL POWER SYSTEMS", NEC ARTICLE 640.
D. BRANCH CIRCUITS FEEDING AUDIO-VISUAL EQUIPMENT MUST NOT ORIGINATE FROM LOAD CENTERS CONNECTED TO INDUCTIVE LOADS.
E. PROVIDE ALL AV CIRCUITS WITH ISOLATED GROUND, DEDICATED NEUTRAL.

2. COORDINATE

A. COORDINATE WITH THE WORK OF ALL SECTIONS. COORDINATE THE LOCATION OF BLOCKING AND BACKING REQUIRED BY THIS SECTION. MAKE REASONABLE MINOR ADJUSTMENTS TO PRESERVE ARCHITECTURAL SYMMETRY AND ALIGNMENT WITH ADJACENT FEATURES AT NO CLAIM FOR ADDITIONAL COST OR TIME. PRESENT CONFLICTS IN TIMELY MANNER FOR RESOLUTION.
B. RELOCATION, REVISION OR CORRECTION CAUSED BY FAILURE OF THE CONTRACTOR TO COORDINATE THE WORK SHALL NOT BE SUBJECT TO CLAIM FOR ADDITIONAL COST OR TIME.
C. POWER RECEPTACLES SHOWN ON THE AV DRAWINGS OUTSIDE OF EQUIPMENT RACKS ARE SHOWN FOR COORDINATION INFORMATION ONLY. REFER TO DIVISION 26 DOCUMENTS FOR CONSTRUCTION.
D. THESE DRAWINGS SHOW SCOPE. THE EXACT LOCATION & ELEVATIONS OF LOUDSPEAKERS, RECEPTACLES AND DEVICES MUST BE COORDINATED WITH THE ARCHITECTURAL DRAWINGS.
E. CONDUIT, BACK BOXES AND PULL BOXES SUPPLIED AND INSTALLED BY ELECTRICAL CONTRACTOR UNDER SUPERVISION OF AV CONTRACTOR.
F. GENERAL CONTRACTOR SHALL COORDINATE THE CONDUIT, DEVICES, PATHWAYS AND JUNCTION BOXES FOR THE AV SYSTEM WITH OTHER TRADE TO AVOID ANY CONFLICTS.

3. LOCATIONS AND DIMENSIONS

A. LOCATIONS AND DIMENSIONS SHOWN ON ARCHITECTURAL DRAWINGS TAKE PRECEDENCE OVER THESE AV DRAWINGS. IN CASE OF APPARENT CONFLICT OR AMBIGUITY, SUBMIT TO THE ARCHITECT IN TIMELY MANNER FOR RESOLUTION.
B. DIMENSIONS TAKE PRECEDENCE OVER SCALE. LARGE SCALE DRAWINGS TAKE PRECEDENCE OVER SMALL. REPORT ALL CONFLICTS BEFORE INSTALLATION.
C. UNLESS OTHERWISE NOTED, DIMENSIONS ARE SHOWN HEIGHT X WIDTH X DEPTH.
D. VERIFY ALL DIMENSIONS, LOCATIONS AND CONDITIONS IN THE FIELD PRIOR TO STARTING WORK. NOTIFY ARCHITECT OF ANY APPARENT DISCREPANCIES.

4. SUPPORT

PROVIDE ALL BLOCKING, BRIDGING, TIES, FASTENERS AND RELATED SUPPORT PROVISIONS FOR ALL WORK OF THIS SECTION. COMPLY WITH APPLICABLE CODE REQUIREMENTS FOR MEANS OF SUPPORT OF ELECTRICAL EQUIPMENT OF THE SAME WEIGHT UNDER THE SAME MOUNTING CONDITIONS. DO NOT APPLY ANY LOAD TO BUILDING STRUCTURE WITHOUT FIRST OBTAINING WRITTEN APPROVAL OF THE PROJECT STRUCTURAL ENGINEER. OBTAIN PER PROJECT PROCEDURES. SUPPORTS FOR RACEWAY SYSTEM BY DIVISION 26 CONTRACTOR.

5. BOX, PANEL AND ENCLOSURE INSTALLATION

A. COORDINATE THE LOCATION OF ALL BOXES, PANELS, ENCLOSURES AND RELATED RACEWAY WITH THE WORK OF OTHER SECTIONS.
B. VERIFY ACCESS TO BOXES, PANELS AND ENCLOSURES COMPLY WITH APPLICABLE CODE.
C. COORDINATE AND CORRECT ALL CONDITIONS OF OCCLUSION OF ALL LOUDSPEAKER ASSEMBLIES. WHERE MORE THAN ONE (1) FLUSH MOUNTED CEILING LOUDSPEAKER HAS BEEN SCHEDULED, NONE SHALL BE LOCATED CLOSER TO ANY FIXED WALL THAN ONE-HALF (1/2) OF THE ADJACENT CLEAR HEIGHT, EXCEPT AT CEILING DISCONTINUITIES, OR WHERE SPECIFICALLY SHOWN ON THE DRAWINGS.
D. INSTALL BOXES, PANELS AND ENCLOSURES SQUARE AND PLUMB. SET FLUSH MOUNTED UNITS SO THAT THE FACE OF THE COVER, BEZEL OR ESCUTCHEON, IS IN THE SAME PLANE AS THE SURROUNDING FINISHED SURFACE. MOUNT BOXES, PANELS AND TRIM SO THAT THERE ARE NO GAPS, CRACKS OR OBVIOUS LINES BETWEEN THE TRIM AND THE ADJACENT FINISHED SURFACE.
E. UNLESS OTHERWISE NOTED, PROVIDE STEEL BOXES, PANELS AND ENCLOSURES. COMPLY WITH DIVISION 26 REQUIREMENTS AND APPLICABLE CODE.
F. UNLESS OTHERWISE NOTED, BOXES AND ENCLOSURES SHALL BE NOT LESS THAN 2-1/8 INCHES DEEP. PROVIDE THE LARGER OF THE SIZE REQUIRED BY APPLICABLE CODE OR AS SHOWN ON DRAWINGS. COORDINATE WIRE AND CABLE BEND RADIUS WITH BOX AND ENCLOSURE SIZE.
G. PULL BOXES: PROVIDE AS REQUIRED BY THE MOST RESTRICTIVE OF APPLICABLE CODE OR THE PROVISIONS OF DIVISION 26. COORDINATE WITH WIRE AND CABLE BEND RADIUS.
H. PROVIDE REQUIRED FIRE RATED JUNCTION BOXES OR FIRE STOP BOX GUARDS AT ALL FIRE RATED WALLS.
I. CONDUIT AND ACCESSORIES MUST BE INSTALLED PLUMB AND TRUE WITH UNIFORM FASTENING, FULLY DRESSED AND FINISHED.

6. RACEWAY

A. FOR ALL WORK OF THIS SECTION, RACEWAY ABOVE GROUND SHALL BE EMT, RACEWAY BELOW GROUND SHALL BE PVC.
B. RACEWAY SHALL BE ¾ INCH DIAMETER TRADE SIZE UNLESS OTHERWISE NOTED.
C. ALL CONDUIT RUNS OVER 100 FT. MUST HAVE LARGE RADIUS BENDS.
D. A MAXIMUM OF TWO 90 DEGREE ELBOWS IN EACH CONDUIT RUN.
E. CONDUIT WITH FIBER OPTIC CABLE INSTALLED, MUST CONFORM TO THE MINIMUM BEND RADIUS AS SPECIFIED BY THE MANUFACTURER OF THE CABLE. DIVISION 26 CONTRACTOR IS TO APPLY RADIUS BENDS WHERE NEEDED. FIBER BEND RADIUS SHALL BE A MINIMUM LONG-TERM LOW-STRESS RADIUS NOT LESS THAN 20 TIMES THE CABLE DIAMETER.
F. KEEP A MINIMUM OF 12" CLEAR BETWEEN ELECTRICAL CONDUIT AND LOW VOLTAGE CONDUIT.
G. PROVIDE FIRE RATED CONDUIT PENETRATION SEALS AT ALL FIRE RATED WALLS.
H. CONDUIT AND ACCESSORIES MUST BE INSTALLED PLUMB AND TRUE WITH UNIFORM FASTENING, FULLY DRESSED AND FINISHED.

7. GROUNDING AND BONDING

COMPLY WITH ALL APPLICABLE CODES AND ORDINANCES.
REFER TO NATIONAL ELECTRICAL CODE SECTION 250.

A. BOND RACEWAY AND RELATED BOXES, PANELS, ENCLOSURES AND CABINETS AS REQUIRED BY APPLICABLE CODE AND DIVISION 26.
B. MAKE RACEWAY CONNECTIONS TO EQUIPMENT RACKS AND SIMILAR EQUIPMENT ENCLOSURES CONTAINING POWERED EQUIPMENT WITH ISOLATED FITTINGS.
C. GROUND AND BOND EQUIPMENT RACKS AND SIMILAR EQUIPMENT ENCLOSURES CONTAINING POWERED EQUIPMENT EXCLUSIVELY VIA THE ISOLATED EQUIPMENT GROUNDING CONDUCTORS PROVIDED UNDER DIVISION 26. SIZE SUCH CONDUCTORS ACCORDING TO APPLICABLE CODE. FOR EACH TECHNICAL BRANCH CIRCUIT, THE ISOLATED EQUIPMENT GROUNDING CONDUCTOR SHALL BE COPPER OF THE SAME GAUGE AS SUPPLY AND NEUTRAL CONDUCTORS. MAIN ISOLATED EQUIPMENT GROUNDING CONDUCTOR TO EACH ENSEMBLE OF EQUIPMENT RACKS SHALL BE COPPER, SIZED AS REQUIRED BY APPLICABLE CODE.
D. D.C. RESISTANCE BETWEEN THE ISOLATED EQUIPMENT GROUNDING BUS AT EQUIPMENT ROOM TECHNICAL POWER PANELS AND THE MAIN PROJECT GROUND FIELD SHALL NOT EXCEED 0.15 OHMS.
E. FOR COMMUNITY ANTENNA TELEVISION AND MASTER ANTENNA TELEVISION SYSTEMS AND RELATED PROVISIONS, COMPLY WITH ARTICLE 800, NATIONAL ELECTRICAL CODE.

8. CABLE AND WIRE

A. ALL LOW VOLTAGE CABLE AND WIRE BY AUDIO-VISUAL CONTRACTOR.
B. USE PLENUM RATED WIRE WHERE REQUIRED BY CODE.
C. CABLE SPLICING NOT ALLOWED IN ANY PULLBOXES.

9. GENERAL

A. IN THE EVENT THAT THESE PLANS, NOTES OR DETAILS OR ANY PART OR PORTION THEREOF ARE USED BY ANY THIRD-PARTY WITHOUT THE EXPRESS AUTHORIZED PERMISSION OF VENEKLASEN ASSOCIATES, THE UNAUTHORIZED USER AND ANYONE BENEFITING THEREFROM, SHALL DEFEND, INDEMNIFY AND HOLD HARMLESS VENEKLASEN ASSOCIATES AND ITS AGENTS, PRINCIPALS, EMPLOYEES AND CONSULTANTS FROM AND AGAINST ANY AND ALL CLAIMS, INCLUDING ATTORNEYS' FEES ARISING OUT OF SAID UNAUTHORIZED USE.
B. FURTHERMORE, THE UNAUTHORIZED USE OF THESE PLANS, NOTES, DETAILS OR ANY PART OR PORTION THEREFORE IS EXPRESSLY PROHIBITED AND VENEKLASEN ASSOCIATES RETAINS A COPYRIGHT OVER ANY AND ALL DOCUMENTS PREPARED BY VENEKLASEN ASSOCIATES.
C. IN THE EVENT THAT THE INSTALLER DEVIATES FROM THE PLANS AND SPECIFICATIONS PREPARED BY VENEKLASEN ASSOCIATES WHICH RESULTS IN DAMAGE TO PERSONS OR PROPERTY OF ANY KIND, INSTALLER HEREBY AGREES TO DEFEND, INDEMNIFY AND HOLD HARMLESS VENEKLASEN ASSOCIATES, ITS AGENTS, PRINCIPALS, EMPLOYEES AND CONSULTANTS FROM AND AGAINST ANY AND ALL CLAIMS, INCLUDING ATTORNEYS' FEES CAUSED BY SUCH FAILURE TO FOLLOW THE PLANS AND SPECIFICATIONS PREPARED BY VENEKLASEN ASSOCIATES, EXCEPTING ONLY THE DAMAGES TO PERSONS OR PROPERTY WHICH ARE CAUSED BY THE SOLE NEGLIGENCE OR WILLFUL MISCONDUCT OF VENEKLASEN ASSOCIATES.
D. DRAWINGS ARE DIAGRAMMATIC AND ARE INTENDED TO CONVEY SCOPE OF WORK AND TO INDICATE GENERAL ARRANGEMENT. THERE ARE NOT INTENDED TO SHOW EVERY DETAIL INCLUDING OFFSET OR FITTING OR EVERY STRUCTURAL DIFFICULTY THAT MAY BE ENCOUNTERED DURING THE WORK. EXCEPT AS OTHERWISE INDICATED, LOCATIONS OF ITEMS ARE APPROXIMATE ONLY. EXACT LOCATIONS NECESSARY TO SECURE PROPER CONDITIONS AND RESULTS MUST BE DETERMINED AT PROJECT SITE AND MUST BE APPROVED BY THE OWNER'S REPRESENTATIVE.
E. EXCEPT AS OTHERWISE INDICATED, MAKE REASONABLE MODIFICATIONS IN LAYOUT AS NEEDED TO PREVENT CONFLICT WITH OTHER WORK OR PROPER EXECUTION OF WORK.
F. INCLUDE WORK NOT USUALLY SHOWN OR SPECIFIED, BUT NECESSARY FOR PROPER INSTALLATION AND OPERATION OF A SYSTEM OR PIECE OF EQUIPMENT IN WORK.

SHEET INDEX

100% PRELIMINARY DESIGN - 2/28/2024

SHEET NUMBER	SHEET TITLE	
T001	TELECOM GENERAL NOTES AND SHEET INDEX	X
T002	TELECOM ABBREVIATIONS NOTES AND SYMBOLS	X
T100	TELECOM SITE PLAN	X
T111	TELECOM FIRST FLOOR PLAN	X
T112	TELECOM SECOND FLOOR PLAN	X
T211	TELECOM FIRST FLOOR REFLECTED CEILING PLAN	X
T212	TELECOM SECOND FLOOR REFLECTED CEILING PLAN	X
T401	TELECOM RISER DIAGRAM	X
T451	TELECOM EQUIPMENT PLAN LAYOUTS	X

PAUL MURDOCH ARCHITECTS

6310 SAN VICENTE BLVD. SUITE 400
LOS ANGELES, CA 90048
T. 310 358-0993

THE DRAWINGS AND SPECIFICATIONS AND IDEAS, DESIGNS, AND ARRANGEMENTS REPRESENTED THEREBY ARE AND SHALL REMAIN THE PROPERTY OF THE ARCHITECT, AND NO PART THEREOF SHALL BE COPIED, DISCLOSED TO OTHERS, OR USED IN CONNECTION WITH ANY WORK OR PROJECT OTHER THAN THE SPECIFIC PROJECT FOR WHICH THEY HAVE BEEN PREPARED AND DEVELOPED WITHOUT THE WRITTEN CONSENT OF THE ARCHITECT. VISUAL CONTACT WITH THESE DRAWINGS OR SPECIFICATIONS SHALL CONSTITUTE CONCLUSIVE EVIDENCE OF ACCEPTANCE OF THESE RESTRICTIONS. WRITTEN DIMENSIONS ON THESE DRAWINGS SHALL HAVE PRECEDENCE OVER SCALED DIMENSIONS. CONTRACTORS SHALL VERIFY AND BE RESPONSIBLE FOR ALL DIMENSIONS AND CONDITIONS ON THE JOB AND THIS OFFICE MUST BE NOTIFIED OF ANY VARIATIONS FROM THE DIMENSIONS AND CONDITIONS SHOWN BY THESE DRAWINGS. SHOP DETAILS MUST BE SUBMITTED TO THIS OFFICE FOR REVIEW BEFORE PROCEEDING WITH FABRICATION.

Veneklasen Associates
Consultants In Acoustics / AV / IT | Security | Environmental Noise
1711 Sunsetrin Street
Santa Monica, CA 90404
(310) 450-1733
www.veneklasen.com

NO. DATE REVISION

allcove
BEACH CITIES HEALTH DISTRICT

100% PRELIMINARY DESIGN SUBMITTAL

PMA PROJECT NO.
23007

DRAWING TITLE
TELECOM GENERAL NOTES AND SHEET INDEX

SCALE
AS NOTED

DATE
02/28/2024

DRAWN ---
CHECKED ---

SHEET NO.
T001

ABBREVIATIONS

℄	Center Line
A 0	Above Zero Floor Level
ACT	Above Counter Top
AFB	Above Floor Below
AFC	Above Finished Ceiling
AFF	Above Finished Floor
AH	Above Header
AP	Acces Point (Wireless)
AS	Above Slab
ATR	All Threaded Rod
AV	Audio/Video
AWG	American Wire Gauge
BAF	Below Access Floor
BC	Bonding Conductor
BDF	Building Distribution Frame
BFC	Below Finished Ceiling
BMS	Building Management System
BTU	British Thermal Units
CAB	Cabinet
CATV	Cable TV
CCTV	Closed Circuit Television
CL	Closet
CLG	Ceiling
CM	Construction Manager
CO	Conduit Only
COAX	Coaxial Cable
CT	Cable Tray
CU	Copper
DIA	Diameter
DR	Door
DWR	Drawer
(E)###	Existing
E.C.	Empty Conduit
EBC	Equipment Bonding Conductor
EC	Electrical Contractor
EF	Entrance Facility
EL	Elevation
ELEC	Electrical
EMI	Electromagnetic Interference
EMT	Electrical Metalic Tubing
ENT	Electrical Nonmetalic Tubing
EOL	End Of Line
EQUIP	Equipment
ER	Equipment Room (Main Computer Room)
(F)	Future
FAN	Fan Panel
FBO	Furnished By Others
FCA	Finished Ceiling Above
FIN	Finished
FOC	Fiber Optic Cable
FSF	Folding Shelf
G	Ground
GC	General Contractor
GRC	Galvanized Rigid Conduit
HR	Home Run
I.D	Inside Dimension
IDF	Intermediate Distribution Frame
ISDN	Integrated Services Digital Network
IW	In Wall
JB	Junction Box
LAN	Local Area Network
LP	Lightning Protector
LRR	Lightning Room Rack
LTG	Lighting

MDF	Main Distribution Frame
MISC	Miscellaneous
MM	Multimode (Optical Fiber)
MOM	Momentary
MTD	Mounted
MTL	Metal
NC	Normally Closed
NIC	Not In Contract
NO	Normally Open
NTS	Not To Scale
OC	On Center
OD	Outer Diameter
OF	Optical Fiber
OFCI	Owner Furnished Contractor Installed
OFE	Owner Furnished Equipment
OFOI	Owner Furnished Owner Installed
OSP	Outside Plant
P/O	Part Of
PB	Pull Box
PBX	Private Branch Exchange
PH	Phase
PNL	Panel
POC	Point of Connection
POE	Power Over Ethernet
POS	Point Of Sale
PRO	Protected Terminal
PROJ	Project
PSCH	Project Standard Control Height
PSRH	Project Standard Receptacle Height
PSSH	Project Standard Switch Height
PWR	Power
RCP	Reflected Ceiling Plan
RM	Room
SC	Ceiling Speaker
SECT	Section
SHP	Shielded Pair
SM	Single Mode (Optical Fiber)
STD	Standard
STP	Shielded Twisted Pair
SW	Switch
TBB	Telecommunications Bonding Backbone
TBD	To Be Determined
TC	Telecommunications Closet
TE	Telecommunications Enclosure
TEF	Telecommunications Entrance Facility
TER	Telecommunications Equipment Room (PBX)
TGB	Telecommunications Grounding Busbar
TMGB	Telecommunications Main Grounding Busbar
TR	Telecommunications Room
TST	Test Set
TTB	Telephone Terminal Board
TYP	Typical
UBC	Uniform Building Code
UG	Underground
UON	Unless Otherwise Noted
UPS	Uninterruptible Power Supply
UTP	Unshielded Twisted Pair
V	Volts
VIF	Verify In Field
W	Watts
W/	With
WAP	Wireless Access Point
WP	Weather Proof
WT	Water Tight

COMMUNICATIONS SYMBOLS

- FLOOR OUTLET VOICE
- FLOOR OUTLET DATA
- FLOOR OUTLET VOICE / DATA
- WALL OUTLET VOICE
- WALL OUTLET DATA
- WALL OUTLET VOICE / DATA
- VOICE / DATA FURNITURE FEED
- W — WALL TELEPHONE
- ONT — OPTICAL NETWORK TERMINATION
- TV — DIGITAL SIGNAGE
- CEILING OUTLET VOICE
- CEILING OUTLET DATA
- CEILING OUTLET VOICE / DATA
- AP# — ACCESS POINT
- AP# — WALL ACCESS POINT
- TV# — CEILING DIGITAL SIGNAGE
- C PS — CEILING SPEAKER

EQUIPMENT RACK AND CABINET SYMBOLS

- FLOOR STANDING CABINET
- WALL MOUNTED SWING-OUT CABINET
- TWO POST RACK
- SWING GATE RACK
- WALL MOUNTED CUBE-IT RACK
- MASTER CABLING SECTION
- TELECOMMUNICATIONS (MAIN) GROUNDING BUSBAR

MISC SYMBOLS

- # — KEYNOTE
- # / ### — ELEVATION CALLOUT

PATHWAYS AND SPACES SYMBOLS

- CABLE TRAY (AFC)
- WIRE MESH TRAY (BAF)
- LADDER RACK
- OPEN WIRE MESH TRAY
- CABLE TRAY CORNER BRACKET
- CABLE TRAY / WIRE MESH BENDS
- CROSS CONNECT
- SLEEVE
- RISER SLOT
- CONDUIT BANK, SECTION VIEW
- CONDUIT BANK, CONCRETE ENCASED, SECTION VIEW
- PLYWOOD
- ACCESS PANEL

TYPICAL COMMUNICATION SYMBOL DESCRIPTIONS

(#) = QUANTITY
(E) = EXISTING TO REMAIN
(R) = REPLACE EXISTING
DATA TYPE ID
SEE "VOICE/DATA WORK OUTLETS" SCHEDULE
(#)###

(#) = QUANTITY
(E) = EXISTING TO REMAIN
(R) = REPLACE EXISTING
ACCESS POINT TYPE NUMBER
(#) AP#

(#) = QUANTITY
(E) = EXISTING TO REMAIN
(R) = REPLACE EXISTING
ACCESS POINT TYPE NUMBER
(#) AP#

TYPICAL CONDUIT SYMBOLS AND DESCRIPTIONS

— CABLE / CONDUIT HOMERUN
(#) # CONDUIT
CONDUIT SIZE IN INCHES
*WIRE QUANTITY

(#) # CONDUIT
CONDUIT SIZE IN INCHES
*WIRE QUANTITY

(#) # CONDUIT SLEEVE (THROUGH FLOOR OR CEILING)
CONDUIT SIZE IN INCHES
*WIRE QUANTITY

CONDUIT UP
CONDUIT DOWN

DATA SCHEDULES

DATA TYPE SCHEDULE

DATA TYPE ID	CAT6A CABLE	GANG SIZE	TYPICAL CONDUIT SIZE	DESCRIPTION
2	2	1	BY DIV 26	(2) CAT6A CABLES FOR DATA
2A	2	1	BY DIV 26	(2) CAT6A CABLES FOR DATA, INSIDE VIDEO DISPLAY JUNCTION BOX (SEE AV DRAWINGS FOR EXACT LOCATION AND ELEVATION)
2B	2	1	BY DIV 26	(2) CAT6A CABLES FOR DATA, INSIDE AV FLOOR BOX (SEE AV DRAWINGS FOR EXACT LOCATION)
AP	2	1	BY DIV 26	(2) CAT6A CABLES FOR WIRELESS ACCESS POINT
E	2	1	BY DIV 26	(2) CAT6A CABLES FOR WALL PHONE (PSCH)
H	2	1	BY DIV 26	(2) CAT6A CABLES FOR DATA / HARSH ENVIRONMENT
S1	2	1	BY DIV 26	(2) CAT6A CABLES FOR SURVEILLANCE CAMERA (SEE SECURITY DRAWINGS FOR EXACT LOCATION AND ELEVATION)
S2	2	1	BY DIV 26	(2) CAT6A CABLES FOR SURVEILLANCE CAMERA / HARSH ENVIRONMENT (SEE SECURITY DRAWINGS FOR EXACT LOCATION AND ELEVATION)

PAUL MURDOCH ARCHITECTS

6310 SAN VICENTE BLVD. SUITE 400
LOS ANGELES, CA 90048
T. 310 358-0993

THE DRAWINGS AND SPECIFICATIONS AND IDEAS, DESIGNS, AND ARRANGEMENTS REPRESENTED THEREBY ARE AND SHALL REMAIN THE PROPERTY OF THE ARCHITECT, AND NO PART THEREOF SHALL BE COPIED, DISCLOSED TO OTHERS, OR USED IN CONNECTION WITH ANY WORK OR PROJECT OTHER THAN THE SPECIFIC PROJECT FOR WHICH THEY HAVE BEEN PREPARED AND DEVELOPED WITHOUT THE WRITTEN CONSENT OF THE ARCHITECT. VISUAL CONTACT WITH THESE DRAWINGS OR SPECIFICATIONS SHALL CONSTITUTE CONCLUSIVE EVIDENCE OF ACCEPTANCE OF THESE RESTRICTIONS. WRITTEN DIMENSIONS ON THESE DRAWINGS SHALL HAVE PRECEDENCE OVER SCALED DIMENSIONS. CONTRACTORS SHALL VERIFY AND BE RESPONSIBLE FOR ALL DIMENSIONS AND CONDITIONS ON THE JOB AND THIS OFFICE MUST BE NOTIFIED OF ANY VARIATIONS FROM THE DIMENSIONS AND CONDITIONS SHOWN BY THESE DRAWINGS. SHOP DETAILS MUST BE SUBMITTED TO THIS OFFICE FOR REVIEW BEFORE PROCEEDING WITH FABRICATION.

Veneklasen Associates
Consultants in Acoustics / AV / IT / Security / Environmental Noise
1717 Euclid St Street
Santa Monica, CA 90404
(310) 450-1733
www.veneklasen.com

NO. DATE REVISION

allcove
BEACH CITIES HEALTH DISTRICT

100% PRELIMINARY DESIGN SUBMITTAL

PMA PROJECT NO.
23007

DRAWING TITLE
TELECOM ABBREVIATIONS NOTES AND SYMBOLS

SCALE
AS NOTED

DATE
02/28/2024

DRAWN ---
CHECKED ---

SHEET NO.
T002

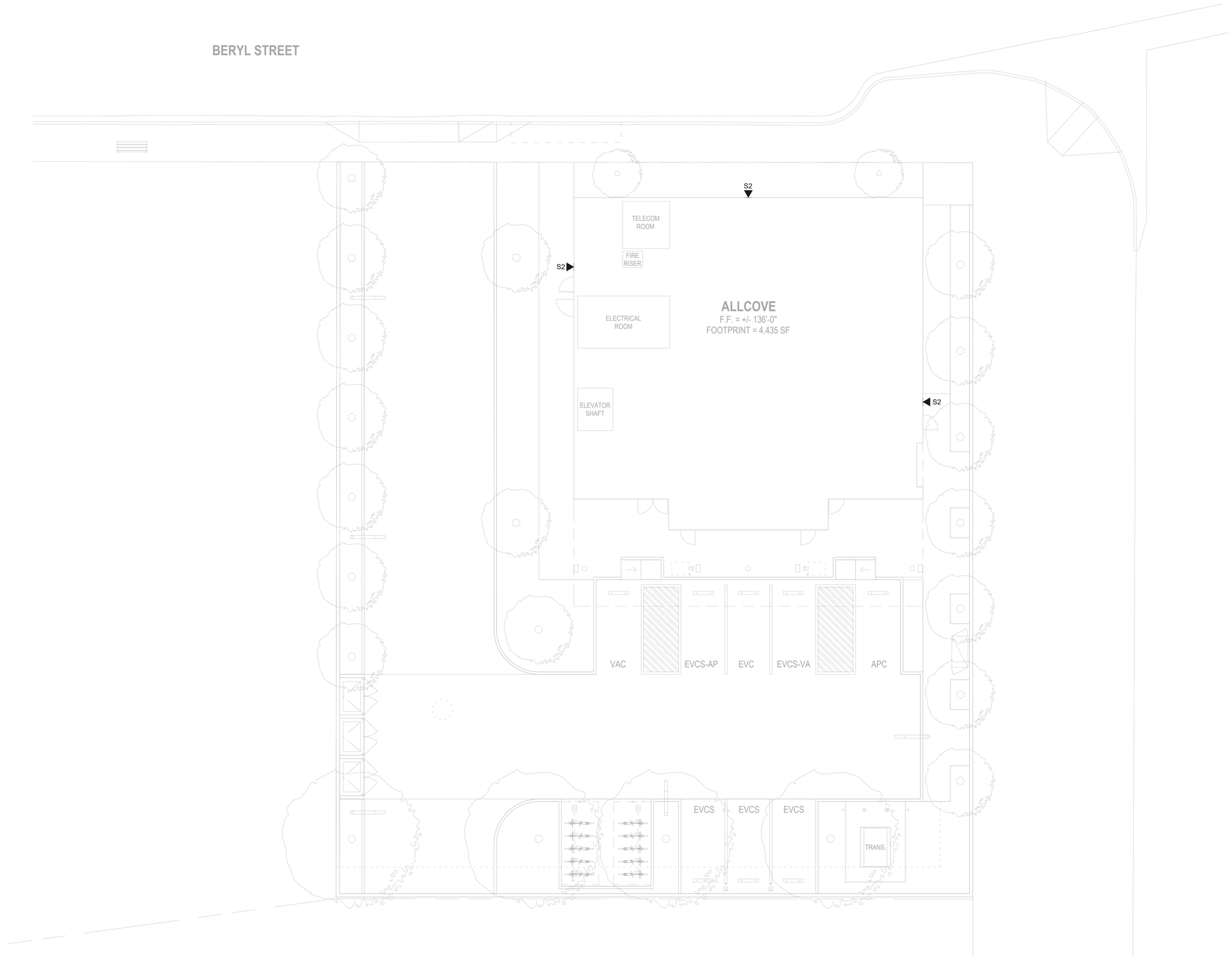

TELECOM SITE PLAN

SCALE:
1/8" = 1'-0"

1

PAUL MURDOCH ARCHITECTS

6310 SAN VICENTE BLVD. SUITE 400
LOS ANGELES, CA 90048
T. 310 358-0993

THE DRAWINGS AND SPECIFICATIONS AND IDEAS, DESIGNS, AND ARRANGEMENTS REPRESENTED THEREBY ARE AND SHALL REMAIN THE PROPERTY OF THE ARCHITECT, AND NO PART THEREOF SHALL BE COPIED, DISCLOSED TO OTHERS, OR USED IN CONNECTION WITH ANY WORK OR PROJECT OTHER THAN THE SPECIFIC PROJECT FOR WHICH THEY HAVE BEEN PREPARED AND DEVELOPED WITHOUT THE WRITTEN CONSENT OF THE ARCHITECT. VISUAL CONTACT WITH THESE DRAWINGS OR SPECIFICATIONS SHALL CONSTITUTE CONCLUSIVE EVIDENCE OF ACCEPTANCE OF THESE RESTRICTIONS. WRITTEN DIMENSIONS ON THESE DRAWINGS SHALL HAVE PRECEDENCE OVER SCALED DIMENSIONS. CONTRACTORS SHALL VERIFY AND BE RESPONSIBLE FOR ALL DIMENSIONS AND CONDITIONS ON THE JOB AND THIS OFFICE MUST BE NOTIFIED OF ANY VARIATIONS FROM THE DIMENSIONS AND CONDITIONS SHOWN BY THESE DRAWINGS. SHOP DETAILS MUST BE SUBMITTED TO THIS OFFICE FOR REVIEW BEFORE PROCEEDING WITH FABRICATION.

Veneklasen Associates
Consultants In Acoustics / AV / IT / Security / Environmental Noise
1711 Sunsetch Street
Santa Monica, CA 90404
(310) 450-1733
www.veneklasen.com

NO. DATE REVISION

allcove
BEACH CITIES
HEALTH DISTRICT

100% PRELIMINARY DESIGN SUBMITTAL

PMA PROJECT NO.
23007

DRAWING TITLE
TELECOM SITE PLAN

SCALE
AS NOTED

DATE
02/28/2024

DRAWN ---
CHECKED ---

SHEET NO.
T100

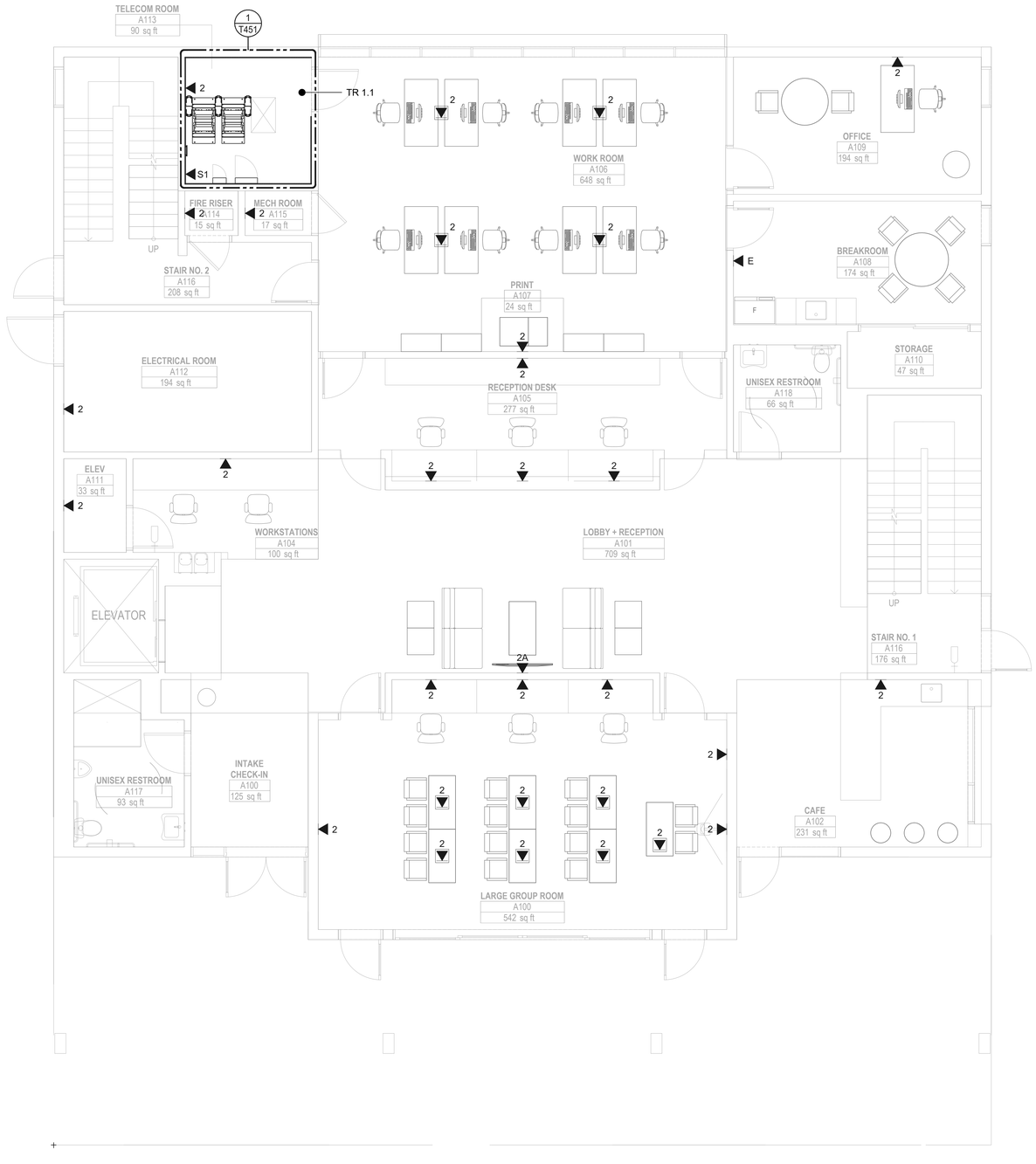

TELECOM FIRST FLOOR PLAN

SCALE: 1/4" = 1'-0"

1

PAUL MURDOCH ARCHITECTS

6310 SAN VICENTE BLVD. SUITE 400
LOS ANGELES, CA 90048
T. 310 358-0993

THE DRAWINGS AND SPECIFICATIONS AND IDEAS, DESIGNS, AND ARRANGEMENTS REPRESENTED THEREBY ARE AND SHALL REMAIN THE PROPERTY OF THE ARCHITECT, AND NO PART THEREOF SHALL BE COPIED, DISCLOSED TO OTHERS, OR USED IN CONNECTION WITH ANY WORK OR PROJECT OTHER THAN THE SPECIFIC PROJECT FOR WHICH THEY HAVE BEEN PREPARED AND DEVELOPED WITHOUT THE WRITTEN CONSENT OF THE ARCHITECT. VISUAL CONTACT WITH THESE DRAWINGS OR SPECIFICATIONS SHALL CONSTITUTE CONCLUSIVE EVIDENCE OF ACCEPTANCE OF THESE RESTRICTIONS. WRITTEN DIMENSIONS ON THESE DRAWINGS SHALL HAVE PRECEDENCE OVER SCALED DIMENSIONS. CONTRACTORS SHALL VERIFY AND BE RESPONSIBLE FOR ALL DIMENSIONS AND CONDITIONS ON THE JOB AND THIS OFFICE MUST BE NOTIFIED OF ANY VARIATIONS FROM THE DIMENSIONS AND CONDITIONS SHOWN BY THESE DRAWINGS. SHOP DETAILS MUST BE SUBMITTED TO THIS OFFICE FOR REVIEW BEFORE PROCEEDING WITH FABRICATION.

Veneklasen Associates
Consultants In Acoustics / AV / IT / Security / Environmental Noise
1711 Sunsetch Street
Santa Monica, CA 90404
(310) 455-1733
www.veneklasen.com

NO. DATE REVISION

allcove
BEACH CITIES HEALTH DISTRICT

100% PRELIMINARY DESIGN SUBMITTAL

PMA PROJECT NO.
23007

DRAWING TITLE
TELECOM FIRST FLOOR PLAN

SCALE
AS NOTED

DATE
02/28/2024

DRAWN ---
CHECKED ---

SHEET NO.
T111

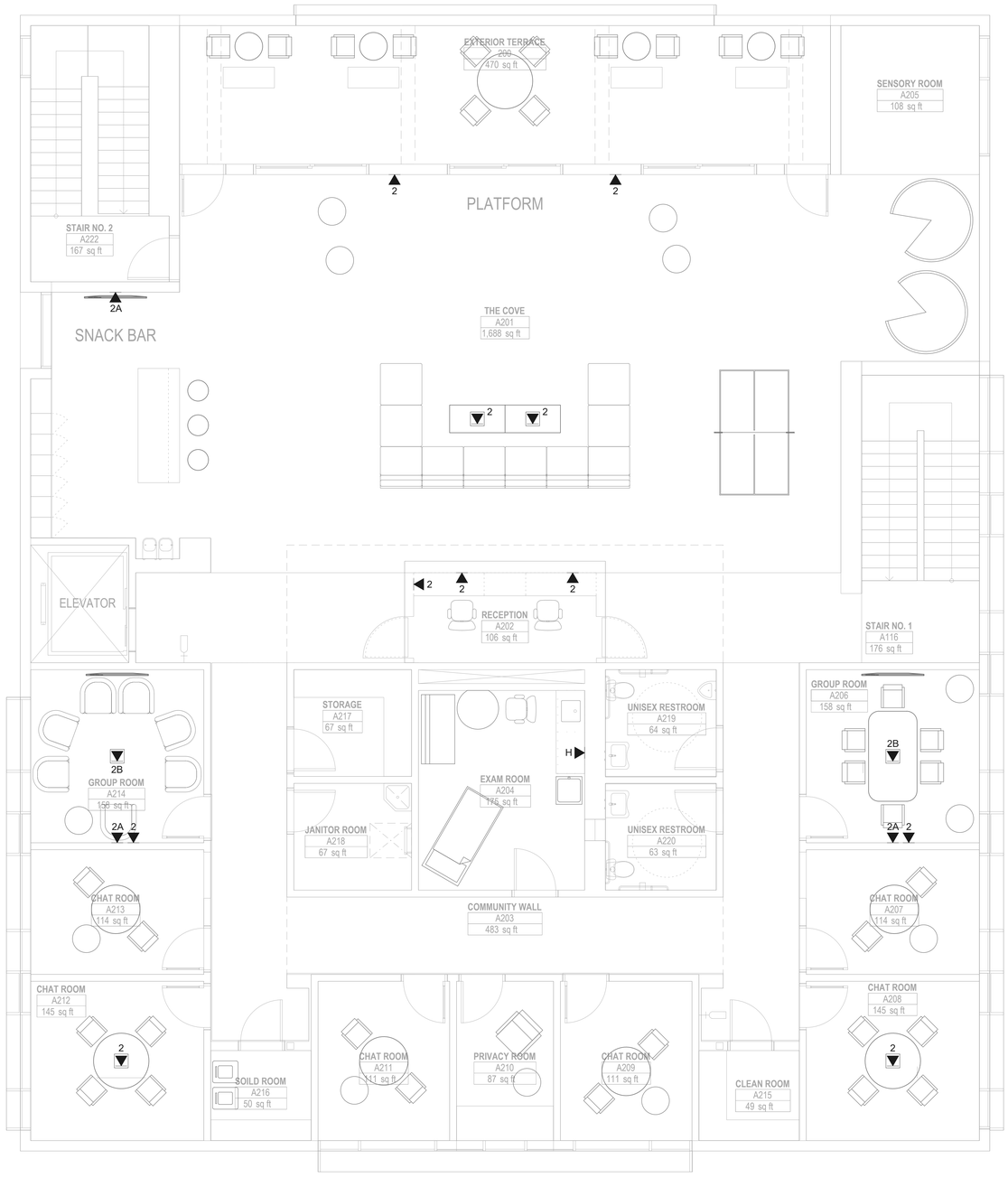

TELECOM SECOND FLOOR PLAN

SCALE:
1/4" = 1'-0"

1

PAUL MURDOCH
ARCHITECTS

6310 SAN VICENTE BLVD. SUITE 400
LOS ANGELES, CA 90048
T. 310 358-0993

THE DRAWINGS AND SPECIFICATIONS AND IDEAS, DESIGNS, AND ARRANGEMENTS REPRESENTED THEREBY ARE AND SHALL REMAIN THE PROPERTY OF THE ARCHITECT, AND NO PART THEREOF SHALL BE COPIED, DISCLOSED TO OTHERS, OR USED IN CONNECTION WITH ANY WORK OR PROJECT OTHER THAN THE SPECIFIC PROJECT FOR WHICH THEY HAVE BEEN PREPARED AND DEVELOPED WITHOUT THE WRITTEN CONSENT OF THE ARCHITECT. VISUAL CONTACT WITH THESE DRAWINGS OR SPECIFICATIONS SHALL CONSTITUTE CONCLUSIVE EVIDENCE OF ACCEPTANCE OF THESE RESTRICTIONS. WRITTEN DIMENSIONS ON THESE DRAWINGS SHALL HAVE PRECEDENCE OVER SCALED DIMENSIONS. CONTRACTORS SHALL VERIFY AND BE RESPONSIBLE FOR ALL DIMENSIONS AND CONDITIONS ON THE JOB AND THIS OFFICE MUST BE NOTIFIED OF ANY VARIATIONS FROM THE DIMENSIONS AND CONDITIONS SHOWN BY THESE DRAWINGS. SHOP DETAILS MUST BE SUBMITTED TO THIS OFFICE FOR REVIEW BEFORE PROCEEDING WITH FABRICATION.

Veneklasen Associates
Consultants In Acoustics / AV / IT / Security / Environmental Noise
1711 Sunsetch Street
Santa Monica, CA 90404
(310) 450-1733
www.veneklasen.com

NO. DATE REVISION

allcove
BEACH CITIES
HEALTH DISTRICT

100% PRELIMINARY DESIGN SUBMITTAL

PMA PROJECT NO.
23007

DRAWING TITLE
TELECOM SECOND FLOOR PLAN

SCALE
AS NOTED

DATE
02/28/2024

DRAWN ---
CHECKED ---

SHEET NO.
T112

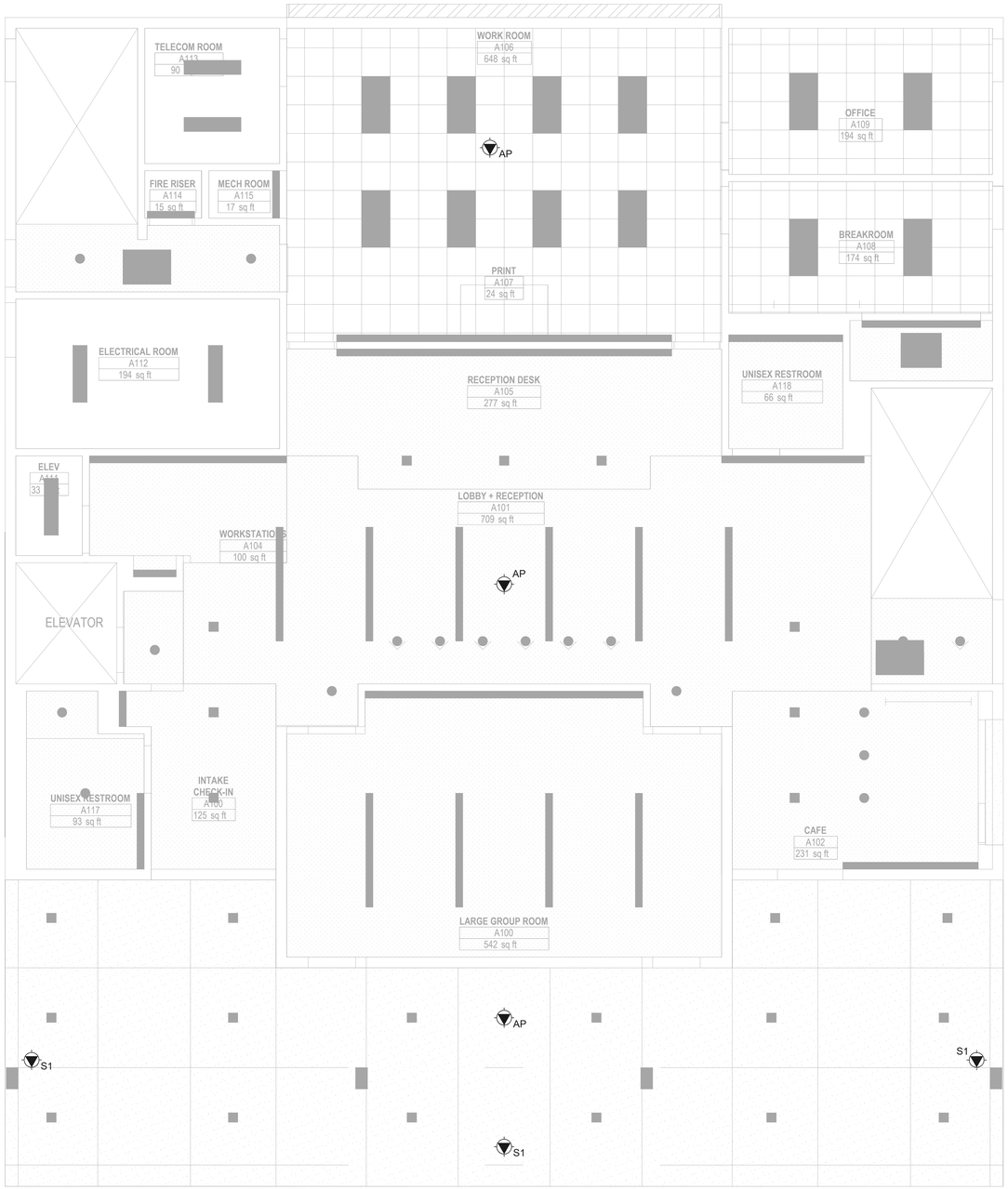

TELECOM FIRST FLOOR REFLECTED CEILING PLAN

SCALE:
1/4" = 1'-0"

1

PAUL MURDOCH
ARCHITECTS

6310 SAN VICENTE BLVD. SUITE 400
LOS ANGELES, CA 90048
T. 310 358-0993

THE DRAWINGS AND SPECIFICATIONS AND IDEAS, DESIGNS, AND ARRANGEMENTS REPRESENTED THEREBY ARE AND SHALL REMAIN THE PROPERTY OF THE ARCHITECT, AND NO PART THEREOF SHALL BE COPIED, DISCLOSED TO OTHERS, OR USED IN CONNECTION WITH ANY WORK OR PROJECT OTHER THAN THE SPECIFIC PROJECT FOR WHICH THEY HAVE BEEN PREPARED AND DEVELOPED WITHOUT THE WRITTEN CONSENT OF THE ARCHITECT. VISUAL CONTACT WITH THESE DRAWINGS OR SPECIFICATIONS SHALL CONSTITUTE CONCLUSIVE EVIDENCE OF ACCEPTANCE OF THESE RESTRICTIONS. WRITTEN DIMENSIONS ON THESE DRAWINGS SHALL HAVE PRECEDENCE OVER SCALED DIMENSIONS. CONTRACTORS SHALL VERIFY AND BE RESPONSIBLE FOR ALL DIMENSIONS AND CONDITIONS ON THE JOB AND THIS OFFICE MUST BE NOTIFIED OF ANY VARIATIONS FROM THE DIMENSIONS AND CONDITIONS SHOWN BY THESE DRAWINGS. SHOP DETAILS MUST BE SUBMITTED TO THIS OFFICE FOR REVIEW BEFORE PROCEEDING WITH FABRICATION.

Veneklasen Associates
Consultants In Acoustics / AV / IT / Security / Environmental Noise
1711 Sunsetch Street
Santa Monica, CA 90404
(310) 450-1733
www.veneklasen.com

NO. DATE REVISION

allcove
BEACH CITIES
HEALTH DISTRICT

100% PRELIMINARY DESIGN SUBMITTAL

PMA PROJECT NO.
23007

DRAWING TITLE
TELECOM FIRST FLOOR REFLECTED CEILING PLAN

SCALE
AS NOTED

DATE
02/28/2024

DRAWN ---
CHECKED ---

SHEET NO.
T211

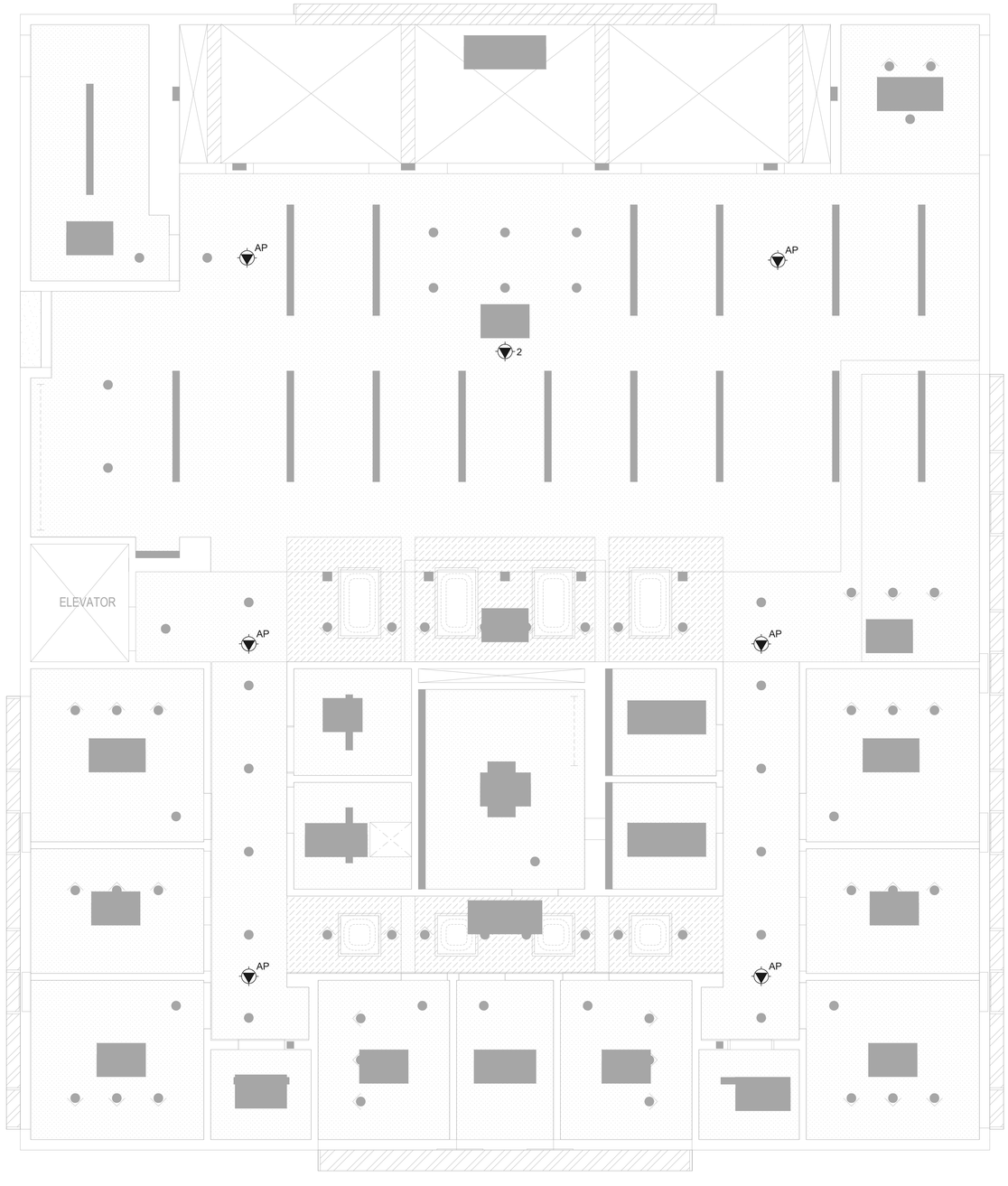

TELECOM SECOND FLOOR REFLECTED CEILING PLAN

SCALE:
1/4" = 1'-0"

1

PAUL MURDOCH
ARCHITECTS

6310 SAN VICENTE BLVD. SUITE 400
LOS ANGELES, CA 90048
T. 310 358-0993

THE DRAWINGS AND SPECIFICATIONS AND IDEAS, DESIGNS, AND ARRANGEMENTS REPRESENTED THEREBY ARE AND SHALL REMAIN THE PROPERTY OF THE ARCHITECT, AND NO PART THEREOF SHALL BE COPIED, DISCLOSED TO OTHERS, OR USED IN CONNECTION WITH ANY WORK OR PROJECT OTHER THAN THE SPECIFIC PROJECT FOR WHICH THEY HAVE BEEN PREPARED AND DEVELOPED WITHOUT THE WRITTEN CONSENT OF THE ARCHITECT. VISUAL CONTACT WITH THESE DRAWINGS OR SPECIFICATIONS SHALL CONSTITUTE CONCLUSIVE EVIDENCE OF ACCEPTANCE OF THESE RESTRICTIONS. WRITTEN DIMENSIONS ON THESE DRAWINGS SHALL HAVE PRECEDENCE OVER SCALED DIMENSIONS. CONTRACTORS SHALL VERIFY AND BE RESPONSIBLE FOR ALL DIMENSIONS AND CONDITIONS ON THE JOB AND THIS OFFICE MUST BE NOTIFIED OF ANY VARIATIONS FROM THE DIMENSIONS AND CONDITIONS SHOWN BY THESE DRAWINGS. SHOP DETAILS MUST BE SUBMITTED TO THIS OFFICE FOR REVIEW BEFORE PROCEEDING WITH FABRICATION.

Veneklasen Associates
Consultants In Acoustics / AV / IT / Security / Environmental Noise
1711 Sunsetch Street
Santa Monica, CA 90404
(310) 450-1733
www.veneklasen.com

NO. DATE REVISION

allcove
BEACH CITIES
HEALTH DISTRICT

100% PRELIMINARY DESIGN SUBMITTAL

PMA PROJECT NO.
23007

DRAWING TITLE
TELECOM SECOND FLOOR REFLECTED CEILING PLAN

SCALE
AS NOTED

DATE
02/28/2024

DRAWN ---
CHECKED ---

SHEET NO.
T212

IT/TELECOM CABLING LEGEND	CONDUIT PATHWAYS LEGEND
"A" = (1) 06STR/SM-OSP	"#1 = 1" PVC CONDUIT
"B" = (1) 25PR/CAT.3/ARMM	"#2 = 2" PVC CONDUIT
"C" = (1) 24STR/SM/OFNR	"#3 = 4" PVC CONDUIT
"D" = (1)25PR/CAT.3/T&Rx24	"#4 = 4" EMT CONDUIT
"E" = (#) CAT. 6A/CMX/UTP	"#5 = 2" EMT CONDUIT
"F" = (#) RG11/CMR	

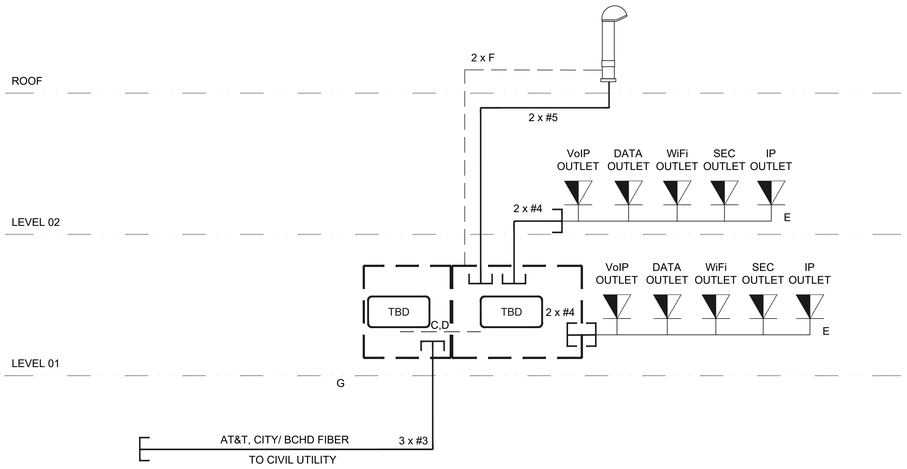

TELECOM RISER DIAGRAM

SCALE: NTS

1

PAUL MURDOCH ARCHITECTS

6310 SAN VICENTE BLVD. SUITE 400
LOS ANGELES, CA 90048
T. 310 358-0993

THE DRAWINGS AND SPECIFICATIONS AND IDEAS, DESIGNS, AND ARRANGEMENTS REPRESENTED THEREBY ARE AND SHALL REMAIN THE PROPERTY OF THE ARCHITECT, AND NO PART THEREOF SHALL BE COPIED, DISCLOSED TO OTHERS, OR USED IN CONNECTION WITH ANY WORK OR PROJECT OTHER THAN THE SPECIFIC PROJECT FOR WHICH THEY HAVE BEEN PREPARED AND DEVELOPED WITHOUT THE WRITTEN CONSENT OF THE ARCHITECT. VISUAL CONTACT WITH THESE DRAWINGS OR SPECIFICATIONS SHALL CONSTITUTE CONCLUSIVE EVIDENCE OF ACCEPTANCE OF THESE RESTRICTIONS. WRITTEN DIMENSIONS ON THESE DRAWINGS SHALL HAVE PRECEDENCE OVER SCALED DIMENSIONS. CONTRACTORS SHALL VERIFY AND BE RESPONSIBLE FOR ALL DIMENSIONS AND CONDITIONS ON THE JOB AND THIS OFFICE MUST BE NOTIFIED OF ANY VARIATIONS FROM THE DIMENSIONS AND CONDITIONS SHOWN BY THESE DRAWINGS. SHOP DETAILS MUST BE SUBMITTED TO THIS OFFICE FOR REVIEW BEFORE PROCEEDING WITH FABRICATION.

Veneklasen Associates
Consultants In Acoustics / AV / IT / Security / Environmental Noise
1711 Euclid Street
Santa Monica, CA 90404
(310) 450-1733
www.veneklasen.com

NO. DATE REVISION

allcove
BEACH CITIES HEALTH DISTRICT

100% PRELIMINARY DESIGN SUBMITTAL

PMA PROJECT NO.
23007

DRAWING TITLE
TELECOM RISER DIAGRAM

SCALE
AS NOTED

DATE
02/28/2024

DRAWN ---
CHECKED ---

SHEET NO.
T401

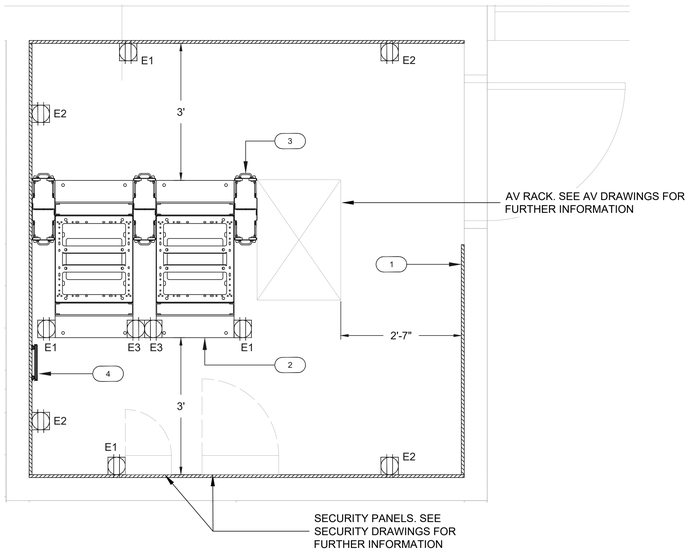

TR 1.1 (TELECOM ROOM A113) - TELECOM EQUIPMENT PLAN LAYOUT

SCALE: 3/4" = 1'-0"

1

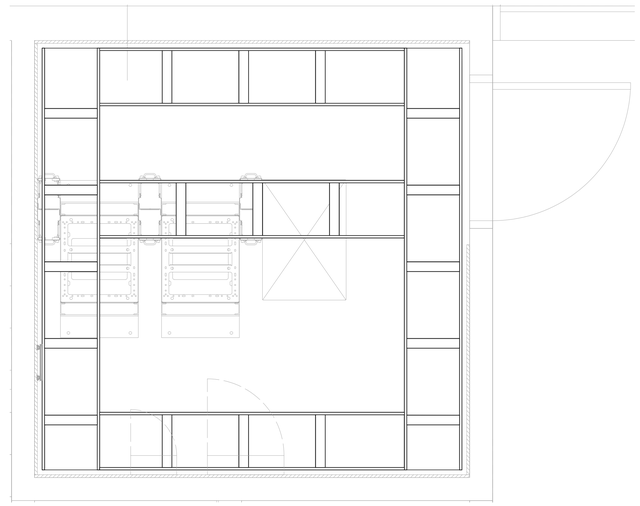

TR 1.1 (TELECOM ROOM A113) - CABLE TRAY PATHWAYS

SCALE: 3/4" = 1'-0"

2

##	TELECOMMUNICATION KEYNOTES
1	3/4" FIRE-TREATED PLYWOOD
2	QUAD-POST RACK
3	CABLE MANAGER
4	TELECOMMUNICATIONS MAIN GROUNDING BUSBAR

ELECTRICAL KEYNOTES
E1 (1) L5/20R OUTLET / PRIMARY
E2 (1) 5-15P CONVENIENCE OUTLET (PSRH)
E3 (1) L6/30R CONVENIENCE OUTLET / UPS

* ELECTRICAL FOR COORDINATION ONLY

DEVICE ID	DESCRIPTION	BOX TYPE	BOX SIZE	INSTALL METHOD	ELEVATION	VOLTAGE	WATTAGE	CIRCUITS	RECEPTICAL TYPE	RECEPTICAL LOCATION	DATA DROP	DATA LOCATION	BTUs/HR	UTILIZATION	ADJ-BTU
UPS/1.1.1	RACKMOUNTABLE UPS / 4RU / MDF/TR1.1 / RELAY RACK #1	4SD	4"X4"X2-1/2"	LADDER RACK STRINGER	7'-6" AFF	208	6240	1	L6-30R	MDF/TR1.1 / RELAY RACK #1	1	UPS-NIC	21291	70%	14903
UPS/1.1.2	RACKMOUNTABLE UPS / 4RU / MDF/TR1.1 / RELAY RACK #2	4SD	4"X4"X2-1/2"	LADDER RACK STRINGER	7'-6" AFF	208	6240	1	L6-30R	MDF/TR1.1 / RELAY RACK #2	1	UPS-NIC	21291	70%	14903
	MDF/TR 1.1 ROOM TOTALS -UPS						12480	2			2		42582		29806
DEVICE ID	DESCRIPTION	BOX TYPE	BOX SIZE	INSTALL METHOD	ELEVATION	VOLTAGE	WATTAGE	CIRCUITS	RECEPTICAL TYPE	RECEPTICAL LOCATION	DATA DROP	DATA LOCATION	BTUs/HR	UTILIZATION	ADJ-BTU
20A/1.2.1	RACKMOUNTABLE UPS / 4RU / MDF/TR1.1 / RELAY RACK #1	4SD	4"X4"X2-1/2"	LADDER RACK STRINGER	7'-6" AFF	120	2200	1	5-20R QUAD	MDF/TR1.1 / RELAY RACK #1	1	NA	7500	70%	5200
20A/1.2.2	RACKMOUNTABLE UPS / 4RU / MDF/TR1.1 / RELAY RACK #2	4SD	4"X4"X2-1/2"	LADDER RACK STRINGER	7'-6" AFF	120	2200	1	5-20R QUAD	MDF/TR1.1 / RELAY RACK #2	1	NA	7500	70%	5200
20A/1.2.3	DEDICATED CIRCUIT / WALL / MPOE	4SD	4"X4"X2-1/2"	PROJECT STANDARD	PSMH	120	2200	1	5-20R QUAD	WALL- PROJECT STANDARD	1	NA	7500	70%	5200
20A/1.2.4	DEDICATED CIRCUIT / WALL / SECURITY SYSTEM	4SD	4"X4"X2-1/2"	SEE SECURITY SHEETS	SC SHEETS	120	2200	1	5-20R QUAD	SEE SECURITY SHEETS	1	NA	7500	70%	5200
	MDF/TR 1.1 ROOM TOTALS - DEDICATED						8800	4			4		30000		20800
DEVICE ID	DESCRIPTION	BOX TYPE	BOX SIZE	INSTALL METHOD	ELEVATION	VOLTAGE	WATTAGE	CIRCUITS	RECEPTICAL TYPE	RECEPTICAL LOCATION	DATA DROP	DATA LOCATION	BTUs/HR	UTILIZATION	ADJ-BTU
15A/1.3.1	SHARES CIRCUIT / WALL / UTILITY OUTLET	4SD	4"X4"X2-1/2"	PROJECT STANDARD	PSMH	120	1200	1	5-15R	WALL	1	NA	4100	70%	2870
15A/1.3.2	SHARES CIRCUIT / WALL / UTILITY OUTLET	4SD	4"X4"X2-1/2"	PROJECT STANDARD	PSMH	120	1200	1	5-15R	WALL	1	NA	4100	70%	2870
15A/1.3.3	SHARES CIRCUIT / WALL / UTILITY OUTLET	4SD	4"X4"X2-1/2"	PROJECT STANDARD	PSMH	120	1200	1	5-15R	WALL	1	NA	4100	70%	2870
	MDF/TR 1.1 ROOM TOTALS - SHARED						3600	3			3		12300		8610

* ELECTRICAL FOR COORDINATION ONLY

PAUL MURDOCH ARCHITECTS

6310 SAN VICENTE BLVD. SUITE 400
LOS ANGELES, CA 90048
T. 310 358-0993

THE DRAWINGS AND SPECIFICATIONS AND IDEAS, DESIGNS, AND ARRANGEMENTS REPRESENTED THEREBY ARE AND SHALL REMAIN THE PROPERTY OF THE ARCHITECT, AND NO PART THEREOF SHALL BE COPIED, DISCLOSED TO OTHERS, OR USED IN CONNECTION WITH ANY WORK OR PROJECT OTHER THAN THE SPECIFIC PROJECT FOR WHICH THEY HAVE BEEN PREPARED AND DEVELOPED WITHOUT THE WRITTEN CONSENT OF THE ARCHITECT. VISUAL CONTACT WITH THESE DRAWINGS OR SPECIFICATIONS SHALL CONSTITUTE CONCLUSIVE EVIDENCE OF ACCEPTANCE OF THESE RESTRICTIONS. WRITTEN DIMENSIONS ON THESE DRAWINGS SHALL HAVE PRECEDENCE OVER SCALED DIMENSIONS. CONTRACTORS SHALL VERIFY AND BE RESPONSIBLE FOR ALL DIMENSIONS AND CONDITIONS ON THE JOB AND THIS OFFICE MUST BE NOTIFIED OF ANY VARIATIONS FROM THE DIMENSIONS AND CONDITIONS SHOWN BY THESE DRAWINGS. SHOP DETAILS MUST BE SUBMITTED TO THIS OFFICE FOR REVIEW BEFORE PROCEEDING WITH FABRICATION.

Veneklasen Associates
Consultants In Acoustics / AV / IT / Security / Environmental Noise
1711 Sunsetch Street
Santa Monica, CA 90404
(310) 450-1733
www.veneklasen.com

NO. DATE REVISION

allcove
BEACH CITIES HEALTH DISTRICT

100% PRELIMINARY DESIGN SUBMITTAL

PMA PROJECT NO.
23007

DRAWING TITLE
TELECOM EQUIPMENT PLAN LAYOUTS

SCALE
AS NOTED

DATE
02/28/2024

DRAWN ---
CHECKED ---

SHEET NO.
T451

BEACH CITIES HEALTH DISTRICT

ALLCOVE

REDONDO BEACH, CA

GENERAL NOTES

REFER TO AUDIO VISUAL SPECIFICATION SECTION FOR COMPLETE REQUIREMENTS

1. ELECTRICAL

   A. ALL CONDUITS, JUNCTION BOXES, BACK BOXES, PULL STRING AND POWER OUTLETS BY DIVISION 26 CONTRACTOR AS REQUIRED.
   B. ELECTRICAL CONTRACTOR TO PROVIDE PULLSTRING ON ALL AV CONDUIT.
   C. ALL POWER TO AV EQUIPMENT TO ORIGINATE FROM DEDICATED AUDIO VIDEO LOAD CENTER IN ACCORDANCE WITH THE LATEST LOCAL AND NATIONAL CODES REFERENCING "TECHNICAL POWER SYSTEMS", NEC ARTICLE 640.
   D. BRANCH CIRCUITS FEEDING AUDIO-VISUAL EQUIPMENT MUST NOT ORIGINATE FROM LOAD CENTERS CONNECTED TO INDUCTIVE LOADS.
   E. PROVIDE ALL AV CIRCUITS WITH ISOLATED GROUND, DEDICATED NEUTRAL.

2. COORDINATE

   A. COORDINATE WITH THE WORK OF ALL SECTIONS. COORDINATE THE LOCATION OF BLOCKING AND BACKING REQUIRED BY THIS SECTION. MAKE REASONABLE MINOR ADJUSTMENTS TO PRESERVE ARCHITECTURAL SYMMETRY AND ALIGNMENT WITH ADJACENT FEATURES AT NO CLAIM FOR ADDITIONAL COST OR TIME. PRESENT CONFLICTS IN TIMELY MANNER FOR RESOLUTION.
   B. RELOCATION, REVISION OR CORRECTION CAUSED BY FAILURE OF THE CONTRACTOR TO COORDINATE THE WORK SHALL NOT BE SUBJECT TO CLAIM FOR ADDITIONAL COST OR TIME.
   C. POWER RECEPTACLES SHOWN ON THE AV DRAWINGS OUTSIDE OF EQUIPMENT RACKS ARE SHOWN FOR COORDINATION INFORMATION ONLY. REFER TO DIVISION 26 DOCUMENTS FOR CONSTRUCTION.
   D. THESE DRAWINGS SHOW SCOPE. THE EXACT LOCATION & ELEVATIONS OF LOUDSPEAKERS, RECEPTACLES AND DEVICES MUST BE COORDINATED WITH THE ARCHITECTURAL DRAWINGS.
   E. CONDUIT, BACK BOXES AND PULL BOXES SUPPLIED AND INSTALLED BY ELECTRICAL CONTRACTOR UNDER SUPERVISION OF AV CONTRACTOR.
   F. GENERAL CONTRACTOR SHALL COORDINATE THE CONDUIT, DEVICES, PATHWAYS AND JUNCTION BOXES FOR THE AV SYSTEM WITH OTHER TRADE TO AVOID ANY CONFLICTS.

3. LOCATIONS AND DIMENSIONS

   A. LOCATIONS AND DIMENSIONS SHOWN ON ARCHITECTURAL DRAWINGS TAKE PRECEDENCE OVER THESE AV DRAWINGS. IN CASE OF APPARENT CONFLICT OR AMBIGUITY, SUBMIT TO THE ARCHITECT IN TIMELY MANNER FOR RESOLUTION.
   B. DIMENSIONS TAKE PRECEDENCE OVER SCALE. LARGE SCALE DRAWINGS TAKE PRECEDENCE OVER SMALL. REPORT ALL CONFLICTS BEFORE INSTALLATION.
   C. UNLESS OTHERWISE NOTED, DIMENSIONS ARE SHOWN HEIGHT X WIDTH X DEPTH.
   D. VERIFY ALL DIMENSIONS, LOCATIONS AND CONDITIONS IN THE FIELD PRIOR TO STARTING WORK. NOTIFY ARCHITECT OF ANY APPARENT DISCREPANCIES.

4. SUPPORT

   PROVIDE ALL BLOCKING, BRIDGING, TIES, FASTENERS AND RELATED SUPPORT PROVISIONS FOR ALL WORK OF THIS SECTION. COMPLY WITH APPLICABLE CODE REQUIREMENTS FOR MEANS OF SUPPORT OF ELECTRICAL EQUIPMENT OF THE SAME WEIGHT UNDER THE SAME MOUNTING CONDITIONS. DO NOT APPLY ANY LOAD TO BUILDING STRUCTURE WITHOUT FIRST OBTAINING WRITTEN APPROVAL OF THE PROJECT STRUCTURAL ENGINEER. OBTAIN PER PROJECT PROCEDURES. SUPPORTS FOR RACEWAY SYSTEM BY DIVISION 26 CONTRACTOR.

5. BOX, PANEL AND ENCLOSURE INSTALLATION

   A. COORDINATE THE LOCATION OF ALL BOXES, PANELS, ENCLOSURES AND RELATED RACEWAY WITH THE WORK OF OTHER SECTIONS.
   B. VERIFY ACCESS TO BOXES, PANELS AND ENCLOSURES COMPLY WITH APPLICABLE CODE.
   C. COORDINATE AND CORRECT ALL CONDITIONS OF OCCLUSION OF ALL LOUDSPEAKER ASSEMBLIES. WHERE MORE THAN ONE (1) FLUSH MOUNTED CEILING LOUDSPEAKER HAS BEEN SCHEDULED, NONE SHALL BE LOCATED CLOSER TO ANY FIXED WALL THAN ONE-HALF (1/2) OF THE ADJACENT CLEAR HEIGHT, EXCEPT AT CEILING DISCONTINUITIES, OR WHERE SPECIFICALLY SHOWN ON THE DRAWINGS.
   D. INSTALL BOXES, PANELS AND ENCLOSURES SQUARE AND PLUMB. SET FLUSH MOUNTED UNITS SO THAT THE FACE OF THE COVER, BEZEL OR ESCUTCHEON, IS IN THE SAME PLANE AS THE SURROUNDING FINISHED SURFACE. MOUNT BOXES, PANELS AND TRIM SO THAT THERE ARE NO GAPS, CRACKS OR OBVIOUS LINES BETWEEN THE TRIM AND THE ADJACENT FINISHED SURFACE.
   E. UNLESS OTHERWISE NOTED, PROVIDE STEEL BOXES, PANELS AND ENCLOSURES. COMPLY WITH DIVISION 26 REQUIREMENTS AND APPLICABLE CODE.
   F. UNLESS OTHERWISE NOTED, BOXES AND ENCLOSURES SHALL BE NOT LESS THAN 2-1/8 INCHES DEEP. PROVIDE THE LARGER OF THE SIZE REQUIRED BY APPLICABLE CODE OR AS SHOWN ON DRAWINGS. COORDINATE WIRE AND CABLE BEND RADIUS WITH BOX AND ENCLOSURE SIZE.
   G. PULL BOXES: PROVIDE AS REQUIRED BY THE MOST RESTRICTIVE OF APPLICABLE CODE OR THE PROVISIONS OF DIVISION 26. COORDINATE WITH WIRE AND CABLE BEND RADIUS.
   H. PROVIDE REQUIRED FIRE RATED JUNCTION BOXES OR FIRE STOP BOX GUARDS AT ALL FIRE RATED WALLS.
   I. CONDUIT AND ACCESSORIES MUST BE INSTALLED PLUMB AND TRUE WITH UNIFORM FASTENING, FULLY DRESSED AND FINISHED.

6. RACEWAY

   A. FOR ALL WORK OF THIS SECTION, RACEWAY ABOVE GROUND SHALL BE EMT, RACEWAY BELOW GROUND SHALL BE PVC.
   B. RACEWAY SHALL BE ¾ INCH DIAMETER TRADE SIZE UNLESS OTHERWISE NOTED.
   C. ALL CONDUIT RUNS OVER 100 FT. MUST HAVE LARGE RADIUS BENDS.
   D. A MAXIMUM OF TWO 90 DEGREE ELBOWS IN EACH CONDUIT RUN.
   E. CONDUIT WITH FIBER OPTIC CABLE INSTALLED, MUST CONFORM TO THE MINIMUM BEND RADIUS AS SPECIFIED BY THE MANUFACTURER OF THE CABLE. DIVISION 26 CONTRACTOR IS TO APPLY RADIUS BENDS WHERE NEEDED. FIBER BEND RADIUS SHALL BE A MINIMUM LONG-TERM LOW-STRESS RADIUS NOT LESS THAN 20 TIMES THE CABLE DIAMETER.
   F. KEEP A MINIMUM OF 12" CLEAR BETWEEN ELECTRICAL CONDUIT AND LOW VOLTAGE CONDUIT.
   G. PROVIDE FIRE RATED CONDUIT PENETRATION SEALS AT ALL FIRE RATED WALLS.
   H. CONDUIT AND ACCESSORIES MUST BE INSTALLED PLUMB AND TRUE WITH UNIFORM FASTENING, FULLY DRESSED AND FINISHED.

7. GROUNDING AND BONDING

   COMPLY WITH ALL APPLICABLE CODES AND ORDINANCES.
   REFER TO NATIONAL ELECTRICAL CODE SECTION 250.

   A. BOND RACEWAY AND RELATED BOXES, PANELS, ENCLOSURES AND CABINETS AS REQUIRED BY APPLICABLE CODE AND DIVISION 26.
   B. MAKE RACEWAY CONNECTIONS TO EQUIPMENT RACKS AND SIMILAR EQUIPMENT ENCLOSURES CONTAINING POWERED EQUIPMENT WITH ISOLATED FITTINGS.
   C. GROUND AND BOND EQUIPMENT RACKS AND SIMILAR EQUIPMENT ENCLOSURES CONTAINING POWERED EQUIPMENT EXCLUSIVELY VIA THE ISOLATED EQUIPMENT GROUNDING CONDUCTORS PROVIDED UNDER DIVISION 26. SIZE SUCH CONDUCTORS ACCORDING TO APPLICABLE CODE. FOR EACH TECHNICAL BRANCH CIRCUIT, THE ISOLATED EQUIPMENT GROUNDING CONDUCTOR SHALL BE COPPER OF THE SAME GAUGE AS SUPPLY AND NEUTRAL CONDUCTORS. MAIN ISOLATED EQUIPMENT GROUNDING CONDUCTOR TO EACH ENSEMBLE OF EQUIPMENT RACKS SHALL BE COPPER, SIZED AS REQUIRED BY APPLICABLE CODE.
   D. D.C. RESISTANCE BETWEEN THE ISOLATED EQUIPMENT GROUNDING BUS AT EQUIPMENT ROOM TECHNICAL POWER PANELS AND THE MAIN PROJECT GROUND FIELD SHALL NOT EXCEED 0.15 OHMS.
   E. FOR COMMUNITY ANTENNA TELEVISION AND MASTER ANTENNA TELEVISION SYSTEMS AND RELATED PROVISIONS, COMPLY WITH ARTICLE 800, NATIONAL ELECTRICAL CODE.

8. CABLE AND WIRE

   A. ALL LOW VOLTAGE CABLE AND WIRE BY AUDIO-VISUAL CONTRACTOR.
   B. USE PLENUM RATED WIRE WHERE REQUIRED BY CODE.
   C. CABLE SPLICING NOT ALLOWED IN ANY PULLBOXES.

9. GENERAL

   A. IN THE EVENT THAT THESE PLANS, NOTES OR DETAILS OR ANY PART OR PORTION THEREOF ARE USED BY ANY THIRD-PARTY WITHOUT THE EXPRESS AUTHORIZED PERMISSION OF VENEKLASEN ASSOCIATES, THE UNAUTHORIZED USER AND ANYONE BENEFITING THEREFROM, SHALL DEFEND, INDEMNIFY AND HOLD HARMLESS VENEKLASEN ASSOCIATES AND ITS AGENTS, PRINCIPALS, EMPLOYEES AND CONSULTANTS FROM AND AGAINST ANY AND ALL CLAIMS, INCLUDING ATTORNEYS' FEES ARISING OUT OF SAID UNAUTHORIZED USE.
   B. FURTHERMORE, THE UNAUTHORIZED USE OF THESE PLANS, NOTES, DETAILS OR ANY PART OR PORTION THEREFORE IS EXPRESSLY PROHIBITED AND VENEKLASEN ASSOCIATES RETAINS A COPYRIGHT OVER ANY AND ALL DOCUMENTS PREPARED BY VENEKLASEN ASSOCIATES.
   C. IN THE EVENT THAT THE INSTALLER DEVIATES FROM THE PLANS AND SPECIFICATIONS PREPARED BY VENEKLASEN ASSOCIATES WHICH RESULTS IN DAMAGE TO PERSONS OR PROPERTY OF ANY KIND, INSTALLER HEREBY AGREES TO DEFEND, INDEMNIFY AND HOLD HARMLESS VENEKLASEN ASSOCIATES, ITS AGENTS, PRINCIPALS, EMPLOYEES AND CONSULTANTS FROM AND AGAINST ANY AND ALL CLAIMS, INCLUDING ATTORNEYS' FEES CAUSED BY SUCH FAILURE TO FOLLOW THE PLANS AND SPECIFICATIONS PREPARED BY VENEKLASEN ASSOCIATES, EXCEPTING ONLY THE DAMAGES TO PERSONS OR PROPERTY WHICH ARE CAUSED BY THE SOLE NEGLIGENCE OR WILLFUL MISCONDUCT OF VENEKLASEN ASSOCIATES.
   D. DRAWINGS ARE DIAGRAMMATIC AND ARE INTENDED TO CONVEY SCOPE OF WORK AND TO INDICATE GENERAL ARRANGEMENT. THERE ARE NOT INTENDED TO SHOW EVERY DETAIL INCLUDING OFFSET OR FITTING OR EVERY STRUCTURAL DIFFICULTY THAT MAY BE ENCOUNTERED DURING THE WORK. EXCEPT AS OTHERWISE INDICATED, LOCATIONS OF ITEMS ARE APPROXIMATE ONLY. EXACT LOCATIONS NECESSARY TO SECURE PROPER CONDITIONS AND RESULTS MUST BE DETERMINED AT PROJECT SITE AND MUST BE APPROVED BY THE OWNER'S REPRESENTATIVE.
   E. EXCEPT AS OTHERWISE INDICATED, MAKE REASONABLE MODIFICATIONS IN LAYOUT AS NEEDED TO PREVENT CONFLICT WITH OTHER WORK OR PROPER EXECUTION OF WORK.
   F. INCLUDE WORK NOT USUALLY SHOWN OR SPECIFIED, BUT NECESSARY FOR PROPER INSTALLATION AND OPERATION OF A SYSTEM OR PIECE OF EQUIPMENT IN WORK.

SHEET INDEX

100% PRELIMINARY DESIGN SUBMITTAL - 02/28/2024

Sheet Index

Sheet Number	Sheet Title	
AV001	AV GENERAL NOTES AND SHEET INDEX	X
AV101EQ	AV FIRST FLOOR EQUIPMENT PLAN	X
AV102EQ	AV SECOND FLOOR EQUIPMENT PLAN	X
AV201EQ	AV FIRST FLOOR REFLECTED CEILING PLAN	X
AV202EQ	AV SECOND FLOOR REFLECTED CEILING PLAN	X

PAUL MURDOCH ARCHITECTS

6310 SAN VICENTE BLVD. SUITE 400
LOS ANGELES, CA 90048
T. 310 358-0993

THE DRAWINGS AND SPECIFICATIONS AND IDEAS, DESIGNS, AND ARRANGEMENTS REPRESENTED THEREBY ARE AND SHALL REMAIN THE PROPERTY OF THE ARCHITECT, AND NO PART THEREOF SHALL BE COPIED, DISCLOSED TO OTHERS, OR USED IN CONNECTION WITH ANY WORK OR PROJECT OTHER THAN THE SPECIFIC PROJECT FOR WHICH THEY HAVE BEEN PREPARED AND DEVELOPED WITHOUT THE WRITTEN CONSENT OF THE ARCHITECT. VISUAL CONTACT WITH THESE DRAWINGS OR SPECIFICATIONS SHALL CONSTITUTE CONCLUSIVE EVIDENCE OF ACCEPTANCE OF THESE RESTRICTIONS. WRITTEN DIMENSIONS ON THESE DRAWINGS SHALL HAVE PRECEDENCE OVER SCALED DIMENSIONS. CONTRACTORS SHALL VERIFY AND BE RESPONSIBLE FOR ALL DIMENSIONS AND CONDITIONS ON THE JOB AND THIS OFFICE MUST BE NOTIFIED OF ANY VARIATIONS FROM THE DIMENSIONS AND CONDITIONS SHOWN BY THESE DRAWINGS. SHOP DETAILS MUST BE SUBMITTED TO THIS OFFICE FOR REVIEW BEFORE PROCEEDING WITH FABRICATION.

Veneklasen Associates
Consultants in Acoustics | AV | IT | Security | Environmental Noise
1711 Sunsetrin Street
Santa Monica, CA 90404
(310) 450-1733
www.veneklasen.com

NO. DATE REVISION

allcove
BEACH CITIES HEALTH DISTRICT

100% PRELIMINARY DESIGN SUBMITTAL

PMA PROJECT NO.
23007

DRAWING TITLE
AV GENERAL NOTES AND SHEET INDEX

SCALE
AS NOTED

DATE
02/28/2024

DRAWN JB
CHECKED PA

SHEET NO.
AV001

NOTES:

1. AV EQUIPMENT RACK
2. 55" VIDEO DISPLAY
3. AV PANEL
   *LAPTOP CONNECTIVITY (HDMI INPUT)
4. SHORT THROW VIDEO PROJECTOR
5. AUDIO INPUT / VOLUME CONTROL / SOURCE SELECT PANEL
   *BACKGROUND MUSIC SELECT
   *VOLUME UP, DOWN, MUTE
   *AUDIO INPUT
   *BLUETOOTH AUDIO
6. VOLUME CONTROL / SOURCE SELECT PANEL
   *BACKGROUND MUSIC SELECT
   *VOLUME UP, DOWN, MUTE
   *BLUETOOTH AUDIO
7. PROJECTION SCREEN - 100" DIAGONAL

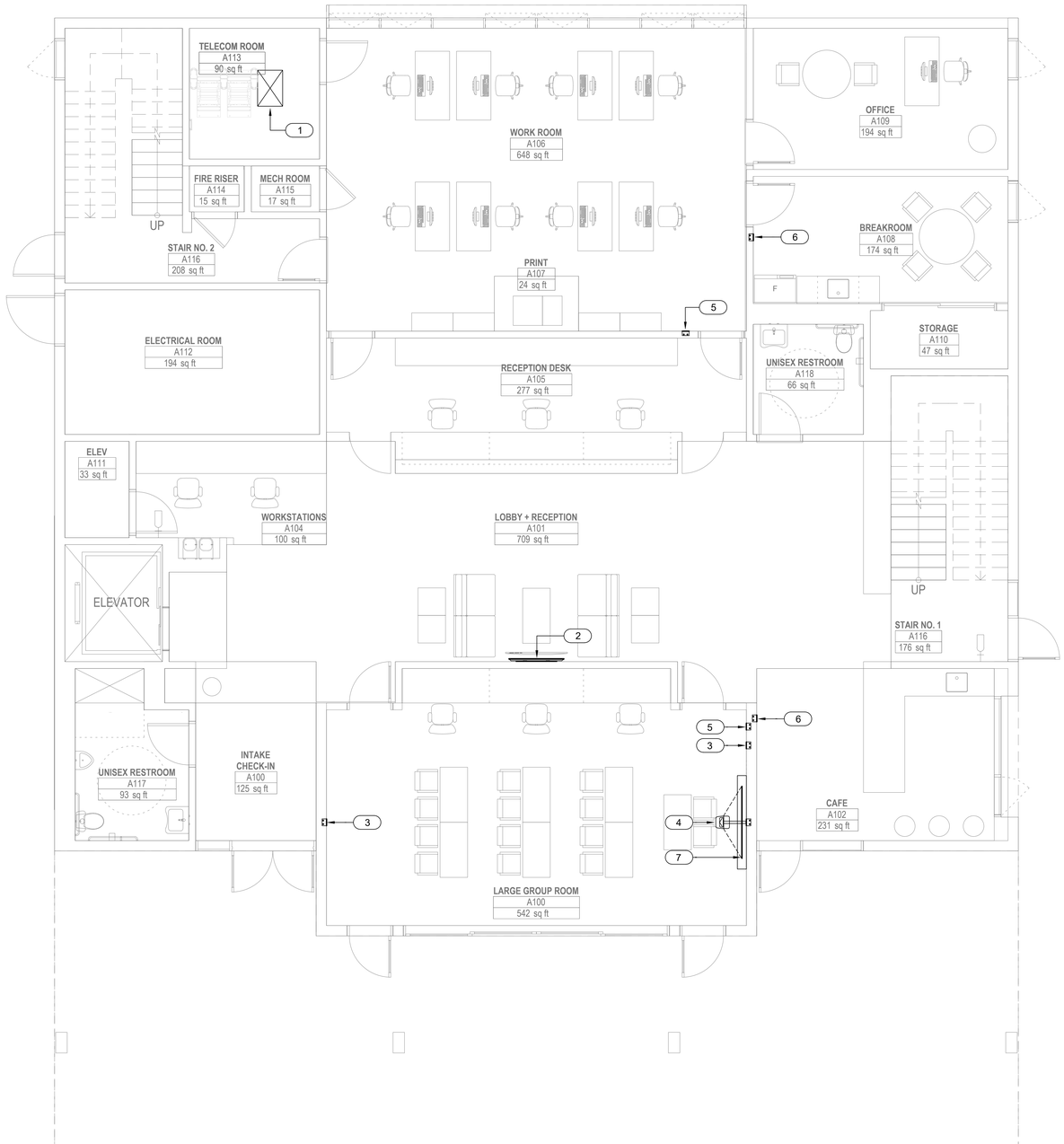

AV FIRST FLOOR EQUIPMENT PLAN (1)
SCALE: 1/4" = 1'-0"

1' 4' 16'

PLAN NORTH
N

PAUL MURDOCH ARCHITECTS

6310 SAN VICENTE BLVD. SUITE 400
LOS ANGELES, CA 90048
T. 310 358-0993

THE DRAWINGS AND SPECIFICATIONS AND IDEAS, DESIGNS, AND ARRANGEMENTS REPRESENTED THEREBY ARE AND SHALL REMAIN THE PROPERTY OF THE ARCHITECT, AND NO PART THEREOF SHALL BE COPIED, DISCLOSED TO OTHERS, OR USED IN CONNECTION WITH ANY WORK OR PROJECT OTHER THAN THE SPECIFIC PROJECT FOR WHICH THEY HAVE BEEN PREPARED AND DEVELOPED WITHOUT THE WRITTEN CONSENT OF THE ARCHITECT. VISUAL CONTACT WITH THESE DRAWINGS OR SPECIFICATIONS SHALL CONSTITUTE CONCLUSIVE EVIDENCE OF ACCEPTANCE OF THESE RESTRICTIONS. WRITTEN DIMENSIONS ON THESE DRAWINGS SHALL HAVE PRECEDENCE OVER SCALED DIMENSIONS. CONTRACTORS SHALL VERIFY AND BE RESPONSIBLE FOR ALL DIMENSIONS AND CONDITIONS ON THE JOB AND THIS OFFICE MUST BE NOTIFIED OF ANY VARIATIONS FROM THE DIMENSIONS AND CONDITIONS SHOWN BY THESE DRAWINGS. SHOP DETAILS MUST BE SUBMITTED TO THIS OFFICE FOR REVIEW BEFORE PROCEEDING WITH FABRICATION.

Veneklasen Associates
Consultants In Acoustics / AV / IT / Security / Environmental Noise
1711 Sunsetch Street
Santa Monica, CA 90404
(310) 450-1733
www.veneklasen.com

NO. DATE REVISION

allcove
BEACH CITIES HEALTH DISTRICT

100% PRELIMINARY DESIGN SUBMITTAL

PMA PROJECT NO.
23007

DRAWING TITLE
AV FIRST FLOOR EQUIPMENT PLAN

SCALE
AS NOTED

DATE
02/28/2024

DRAWN JB
CHECKED PA

SHEET NO.
AV101EQ

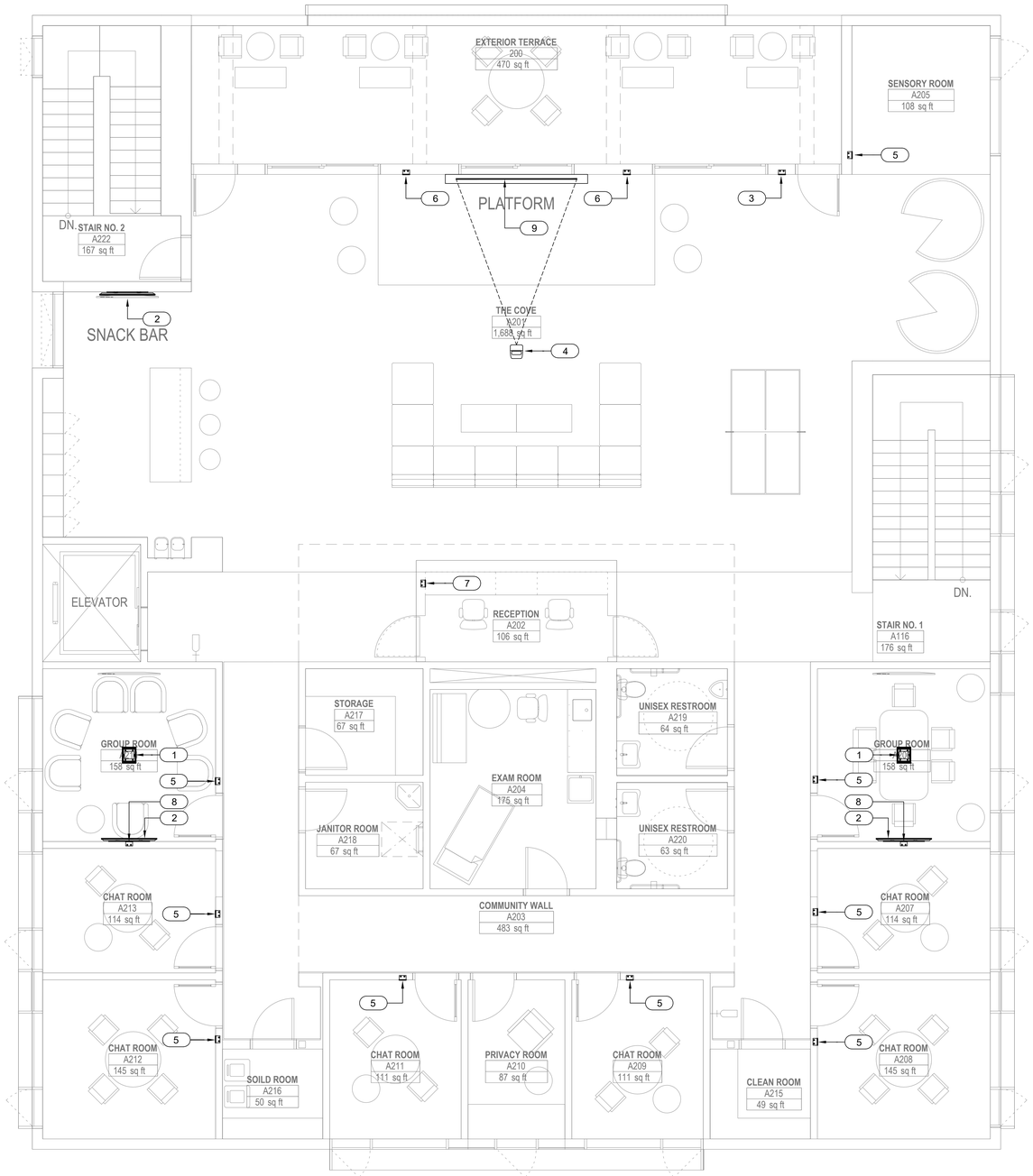

NOTES:

1. AV FLOOR BOX
   *HDMI INPUT
2. 55" VIDEO DISPLAY
3. TOUCH PANEL (AV CONTROL)
4. VIDEO PROJECTOR
5. AUDIO INPUT / VOLUME CONTROL / SOURCE SELECT PANEL
   *BACKGROUND MUSIC SELECT
   *VOLUME UP, DOWN, MUTE
   *AUDIO INPUT
   *BLUETOOTH AUDIO
6. AV PANEL 1
   *(2) MIC/LINE INPUTS
   *(1) AUDIO TIE LINES
   *(1) VIDEO (HDBASE-T)
   *(1) CAT6 TIE
7. AV PANEL 2
   *(1) MIC/LINE INPUTS
   *(1) AUDIO TIE LINES
   *(1) AV CONTROL CONNECTIVITY
   *(1) CAT6 TIE
8. FACILITY PANEL
   *HDMI INPUT
9. PROJECTION SCREEN - 120" DIAGONAL

PAUL MURDOCH ARCHITECTS

6310 SAN VICENTE BLVD. SUITE 400
LOS ANGELES, CA 90048
T. 310 358-0993

THE DRAWINGS AND SPECIFICATIONS AND IDEAS, DESIGNS, AND ARRANGEMENTS REPRESENTED THEREBY ARE AND SHALL REMAIN THE PROPERTY OF THE ARCHITECT, AND NO PART THEREOF SHALL BE COPIED, DISCLOSED TO OTHERS, OR USED IN CONNECTION WITH ANY WORK OR PROJECT OTHER THAN THE SPECIFIC PROJECT FOR WHICH THEY HAVE BEEN PREPARED AND DEVELOPED WITHOUT THE WRITTEN CONSENT OF THE ARCHITECT. VISUAL CONTACT WITH THESE DRAWINGS OR SPECIFICATIONS SHALL CONSTITUTE CONCLUSIVE EVIDENCE OF ACCEPTANCE OF THESE RESTRICTIONS. WRITTEN DIMENSIONS ON THESE DRAWINGS SHALL HAVE PRECEDENCE OVER SCALED DIMENSIONS. CONTRACTORS SHALL VERIFY AND BE RESPONSIBLE FOR ALL DIMENSIONS AND CONDITIONS ON THE JOB AND THIS OFFICE MUST BE NOTIFIED OF ANY VARIATIONS FROM THE DIMENSIONS AND CONDITIONS SHOWN BY THESE DRAWINGS. SHOP DETAILS MUST BE SUBMITTED TO THIS OFFICE FOR REVIEW BEFORE PROCEEDING WITH FABRICATION.

Veneklasen Associates
Consultants In Acoustics | AV | IT | Security | Environmental Noise
1711 Sunsetch Street
Santa Monica, CA 90404
(310) 450-1733
www.veneklasen.com

NO. DATE REVISION

allcove
BEACH CITIES HEALTH DISTRICT

100% PRELIMINARY DESIGN SUBMITTAL

PMA PROJECT NO.
23007

DRAWING TITLE
AV SECOND FLOOR EQUIPMENT PLAN

SCALE
AS NOTED

DATE
02/28/2024

DRAWN JB
CHECKED PA

SHEET NO.
AV102EQ

AV SECOND FLOOR EQUIPMENT PLAN (1)
SCALE: 1/4" = 1'-0"

1' 4' 16'

PLAN NORTH
N

NOTES:

(1) SPEAKER ZONE

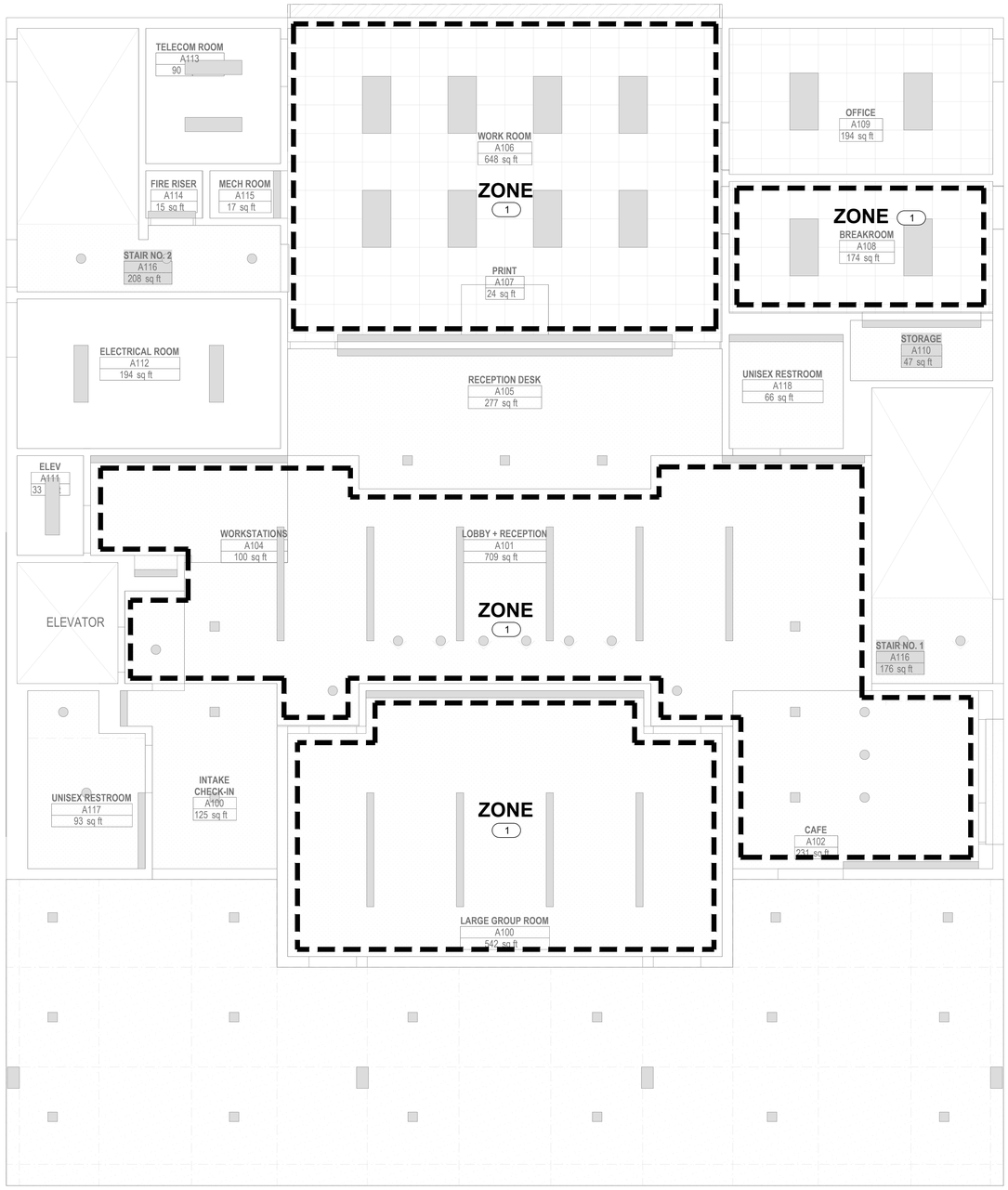

AV FIRST FLOOR REFLECTED CEILING PLAN (1)

SCALE: 1/4" = 1'-0"

1' 4' 16'

PLAN NORTH N

PAUL MURDOCH ARCHITECTS

6310 SAN VICENTE BLVD. SUITE 400
LOS ANGELES, CA 90048
T. 310 358-0993

THE DRAWINGS AND SPECIFICATIONS AND IDEAS, DESIGNS, AND ARRANGEMENTS REPRESENTED THEREBY ARE AND SHALL REMAIN THE PROPERTY OF THE ARCHITECT, AND NO PART THEREOF SHALL BE COPIED, DISCLOSED TO OTHERS, OR USED IN CONNECTION WITH ANY WORK OR PROJECT OTHER THAN THE SPECIFIC PROJECT FOR WHICH THEY HAVE BEEN PREPARED AND DEVELOPED WITHOUT THE WRITTEN CONSENT OF THE ARCHITECT. VISUAL CONTACT WITH THESE DRAWINGS OR SPECIFICATIONS SHALL CONSTITUTE CONCLUSIVE EVIDENCE OF ACCEPTANCE OF THESE RESTRICTIONS. WRITTEN DIMENSIONS ON THESE DRAWINGS SHALL HAVE PRECEDENCE OVER SCALED DIMENSIONS. CONTRACTORS SHALL VERIFY AND BE RESPONSIBLE FOR ALL DIMENSIONS AND CONDITIONS ON THE JOB AND THIS OFFICE MUST BE NOTIFIED OF ANY VARIATIONS FROM THE DIMENSIONS AND CONDITIONS SHOWN BY THESE DRAWINGS. SHOP DETAILS MUST BE SUBMITTED TO THIS OFFICE FOR REVIEW BEFORE PROCEEDING WITH FABRICATION.

Veneklasen Associates
Consultants In Acoustics / AV / IT / Security / Environmental Noise
1711 Sunsetch Street
Santa Monica, CA 90404
(310) 450-1733
www.veneklasen.com

NO. DATE REVISION

allcove
BEACH CITIES HEALTH DISTRICT

100% PRELIMINARY DESIGN SUBMITTAL

PMA PROJECT NO.
23007

DRAWING TITLE
AV FIRST FLOOR REFLECTED CEILING PLAN

SCALE
AS NOTED

DATE
02/28/2024

DRAWN JB
CHECKED PA

SHEET NO.
AV201EQ

NOTES:

1 SPEAKER ZONE

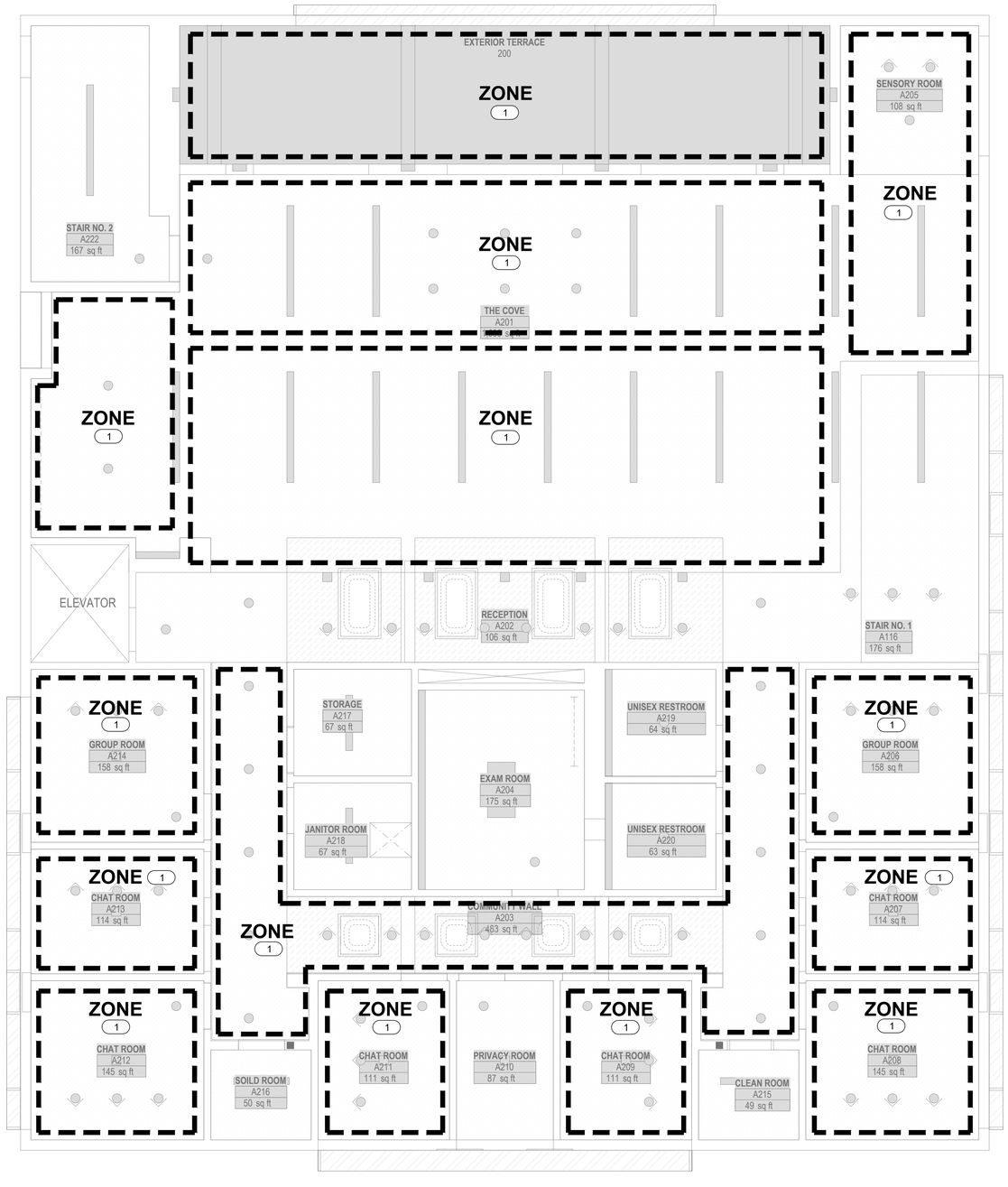

AV SECOND FLOOR REFLECTED CEILING PLAN 1

SCALE: 1/4" = 1'-0"

1' 4' 16'

PLAN NORTH N

PAUL MURDOCH ARCHITECTS

6310 SAN VICENTE BLVD. SUITE 400
LOS ANGELES, CA 90048
T. 310 358-0993

THE DRAWINGS AND SPECIFICATIONS AND IDEAS, DESIGNS, AND ARRANGEMENTS REPRESENTED THEREBY ARE AND SHALL REMAIN THE PROPERTY OF THE ARCHITECT, AND NO PART THEREOF SHALL BE COPIED, DISCLOSED TO OTHERS, OR USED IN CONNECTION WITH ANY WORK OR PROJECT OTHER THAN THE SPECIFIC PROJECT FOR WHICH THEY HAVE BEEN PREPARED AND DEVELOPED WITHOUT THE WRITTEN CONSENT OF THE ARCHITECT. VISUAL CONTACT WITH THESE DRAWINGS OR SPECIFICATIONS SHALL CONSTITUTE CONCLUSIVE EVIDENCE OF ACCEPTANCE OF THESE RESTRICTIONS. WRITTEN DIMENSIONS ON THESE DRAWINGS SHALL HAVE PRECEDENCE OVER SCALED DIMENSIONS. CONTRACTORS SHALL VERIFY AND BE RESPONSIBLE FOR ALL DIMENSIONS AND CONDITIONS ON THE JOB AND THIS OFFICE MUST BE NOTIFIED OF ANY VARIATIONS FROM THE DIMENSIONS AND CONDITIONS SHOWN BY THESE DRAWINGS. SHOP DETAILS MUST BE SUBMITTED TO THIS OFFICE FOR REVIEW BEFORE PROCEEDING WITH FABRICATION.

Veneklasen Associates
Consultants In Acoustics / AV / IT / Security / Environmental Noise
1717 Euclid Street
Santa Monica, CA 90404
(310) 450-1733
www.veneklasen.com

NO. DATE REVISION

allcove
BEACH CITIES HEALTH DISTRICT

100% PRELIMINARY DESIGN SUBMITTAL

PMA PROJECT NO.
23007

DRAWING TITLE
AV SECOND FLOOR REFLECTED CEILING PLAN

SCALE
AS NOTED

DATE
02/28/2024

DRAWN JB
CHECKED PA

SHEET NO.
AV202EQ

BEACH CITIES HEALTH DISTRICT
ALLCOVE
REDONDO BEACH, CA

GENERAL NOTES

REFER TO SPECIFICATIONS FOR COMPLETE REQUIREMENTS.

1. SECURITY

A. SECURITY SYSTEM CONSISTS OF BUT ARE NOT LIMITED TO:
B. PROVIDE ALL LABOR, MATERIALS, TRANSPORTATION AND EQUIPMENT TO COMPLETE THE FURNISHING, INSTALLATION, ASSEMBLY, SET UP, AND TESTING OF THE SECURITY SYSTEM WORK INDICATED ON THE REQUEST FOR PROPOSAL (RFP) AND SPECIFIED HEREIN. NOT WITHSTANDING ANY DETAILED INFORMATION IN THIS SECTION, PROVIDE COMPLETE, WORKING SYSTEMS. GENERAL SCOPE OF WORK FOR THIS PROJECT IS OUTLINED ON THE RFP AND DESCRIBED IN THE SPECIFICATION.
C. ALL COMPONENTS SHALL BE PROVIDED / INSTALLED BY CONTRACTOR PER DRAWINGS. PROGRAMMING CONTRACTOR IS RESPONSIBLE FOR ALL NECESSARY COMPONENTS, CABLE, HARDWARE, ETC. TO FURNISH COMPLETE AND OPERATIONAL SYSTEM.
D. CONTRACTOR IS RESPONSIBLE FOR PROVIDING TRAINING TO OPERATOR PERSONNEL AS REQUIRED TO ENSURE PERSONNEL ARE FAMILIAR WITH OPERATING AND PROGRAMMING OF SECURITY SYSTEM.
E. TRAINING SESSIONS TO BE COORDINATED WITH OWNER / OPERATOR PRIOR TO COMPLETION OF SYSTEM INSTALLATION.
F. ALL CONDUITS, JUNCTION BOXES, FLOOR BOXES, BACK BOXES, PULL STRING AND POWER OUTLETS BY DIVISION 26 CONTRACTOR AS REQUIRED

2. ELECTRICAL AND MECHANICAL NOTES

A. ALL WORK SHALL BE IN ACCORDANCE WITH THE LATEST EDITION OF THE NATIONAL ELECTRICAL CODE AND ALL APPLICABLE LOCAL CODES, THE CONTRACTOR SHALL NOT INTERMIX ANY LINE VOLTAGE POWER WIRES (120VAC) WITH ANY LOW VOLTAGE SIGNAL OR CONTROL WIRES IN ANY CONDUIT.
B. ALL NEW ELECTRICAL POWER SUPPLIED TO SECURITY EQUIPMENT OR DEVICES SHALL BE ON A AN EMERGENCY SYSTEM INCLUDING UPS WHERE AVAILABLE. ALL CONDUCTORS AND CIRCUIT BREAKERS SHALL BE SIZED IN ACCORDANCE WITH THEIR CONNECTED LOADS (20 AMP MINIMUM). ALL CIRCUITS SHALL BE DEDICATED. A GROUND CONDUCTOR SHALL ALWAYS BE INSTALLED IN ANY POWER WIRING. ALL SECURITY EQUIPMENT UTILIZING ELECTRICAL POWER SHALL ALSO BE ADEQUATELY GROUNDED.
C. ESTIMATED HEAT LOADS ARE SHOWN FOR REFERENCE ONLY, THEY ARE INTENDED FOR INCORPORATION IN THE PROJECT AS PART OF THE MECHANICAL DESIGN.
D. ALL IDF, MDF, AND AV ROOMS TO MAINTAIN 70°F (MAX) AND 50% RH (RELATIVE HUMIDITY)

3. COORDINATE

A. COORDINATE WITH THE WORK OF ALL SECTIONS. COORDINATE THE LOCATION OF BLOCKING AND BACKING REQUIRED BY THIS SECTION. MAKE REASONABLE MINOR ADJUSTMENTS TO PRESERVE ARCHITECTURAL SYMMETRY AND ALIGNMENT WITH ADJACENT FEATURES AT NO CLAIM FOR ADDITIONAL COST OR TIME. PRESENT CONFLICTS IN TIMELY MANNER FOR RESOLUTION.
B. RELOCATION, REVISION OR CORRECTION CAUSED BY FAILURE OF THE CONTRACTOR TO COORDINATE THE WORK SHALL NOT BE SUBJECT TO CLAIM FOR ADDITIONAL COST OR TIME.
C. POWER RECEPTACLES SHOWN ON THE SECURITY DRAWINGS OUTSIDE OF EQUIPMENT RACKS ARE SHOWN FOR COORDINATION INFORMATION ONLY. REFER TO DIVISION 26 DOCUMENTS FOR CONSTRUCTION.
D. THESE DRAWINGS SHOW SCOPE. THE EXACT LOCATION & ELEVATIONS OF CEILING AND WALL MOUNTED SECURITY DEVICES MUST BE COORDINATED WITH THE ARCHITECTURAL DRAWINGS.
E. CABLE TRAY, CONDUIT, DEVICE BOX, BACK BOXES AND PULL BOXES SUPPLIED AND INSTALLED BY ELECTRICAL CONTRACTOR UNDER SUPERVISION OF SECURITY CONTRACTOR.
F. GENERAL CONTRACTOR SHALL COORDINATE THE CONDUIT, DEVICES, PATHWAYS, CONTROL PANELS, AND JUNCTION BOXES FOR THE SECURITY SYSTEM WITH OTHER TRADE TO AVOID ANY CONFLICTS. ALL BOX OPENINGS SHALL BE ACCESSIBLE.
G. DOOR LOCKS AND HARDWARE ARE PROVIDED BY DIVISION 8, WITH CONNECTION TO THIS HARDWARE BY SECURITY CONTRACTOR (DIVISION 280500).

4. LOCATIONS AND DIMENSIONS

A. LOCATIONS AND DIMENSIONS SHOWN ON ARCHITECTURAL DRAWINGS TAKE PRECEDENCE OVER THE SECURITY DRAWINGS. IN CASE OF APPARENT CONFLICT OR AMBIGUITY, SUBMIT TO THE ARCHITECT IN TIMELY MANNER FOR RESOLUTION.
B. DIMENSIONS TAKE PRECEDENCE OVER SCALE. LARGE SCALE DRAWINGS TAKE PRECEDENCE OVER SMALL. REPORT ALL CONFLICTS BEFORE INSTALLATION.
C. UNLESS OTHERWISE NOTED, DIMENSIONS ARE SHOWN HEIGHT X WIDTH X DEPTH.
D. VERIFY ALL DIMENSIONS, LOCATIONS AND CONDITIONS IN THE FIELD PRIOR TO STARTING WORK. NOTIFY ARCHITECT OF ANY APPARENT DISCREPANCIES.

5. PATHWAYS AND SUPPORT

A. PROVIDE ALL BLOCKING, BRIDGING, TIES, FASTENERS AND RELATED SUPPORT PROVISIONS FOR ALL WORK OF THIS SECTION. COMPLY WITH APPLICABLE CODE REQUIREMENTS FOR MEANS OF SUPPORT OF ELECTRICAL EQUIPMENT OF THE SAME WEIGHT UNDER THE SAME MOUNTING CONDITIONS. DO NOT APPLY ANY LOAD TO BUILDING STRUCTURE WITHOUT FIRST OBTAINING WRITTEN APPROVAL OF THE PROJECT STRUCTURAL ENGINEER. OBTAIN PER PROJECT PROCEDURES.
B. ANY CABLING PATHWAYS SHOWN REPRESENT A POTENTIAL ROUTE AS DETERMINED AT THE TIME OF DESIGN AND MAY NOT NECESSARILY BE THE OPTIMAL PATHWAY. DEPENDING UPON THE ACTUAL FIELD CONDITIONS ALL CABLING PATHWAYS MUST BE FIELD VERIFIED. IT IS ULTIMATELY THE RESPONSIBILITY OF THE CONTRACTOR TO DETERMINE THE OPTIMAL CABLING PATHWAYS BASED UPON FIELD CONDITIONS, CODE COMPLIANCE AND COORDINATED WITH OTHER TRADES. IT IS IMPERATIVE THAT THE CONTRACTOR VERIFIES ALL CABLING PATHWAYS PRIOR TO SUBMITTING THEIR BID. THE OWNER WILL NOT BE RESPONSIBLE FOR TIME ASSOCIATED WITH FIELD VERIFICATION EFFORTS FOR DETERMINING MOST VIABLE CABLING PATHWAYS.
C. PROVIDE SEPARATE PATHWAYS FOR EACH SECURITY SYSTEM (CCTV, ACCESS CONTROL, INTRUSION DETECTION, VIDEO INTERCOM).

6. BOX, PANEL AND ENCLOSURE INSTALLATION

A. COORDINATE THE LOCATION OF ALL BOXES, PANELS, ENCLOSURES AND RELATED RACEWAY WITH THE WORK OF OTHER SECTIONS.
B. VERIFY ACCESS TO BOXES, PANELS AND ENCLOSURES COMPLY WITH APPLICABLE CODE.
C. INSTALL BOXES, PANELS AND ENCLOSURES SQUARE AND PLUMB. SET FLUSH MOUNTED UNITS SO THAT THE FACE OF THE COVER, BEZEL OR ESCUTCHEON, IS IN THE SAME PLANE AS THE SURROUNDING FINISHED SURFACE. MOUNT BOXES, PANELS AND TRIM SO THAT THERE ARE NO GAPS, CRACKS OR OBVIOUS LINES BETWEEN THE TRIM AND THE ADJACENT FINISHED SURFACE. THIS APPLIES TO ALL HORIZONTAL AND VERTICAL SURFACES. PULLBOX LOCATED IN THE CEILING SPACE SHALL BE ACCESSIBLE, IN CASE A PULLBOX HAS TO BE LOCATED IN A DRY WALL OR INACCESSIBLE CEILING. THE CONTRACTOR SHALL COORDINATE WITH THE ARCHITECT THE INSTALL OF CEILING HATCH.
D. UNLESS OTHERWISE NOTED, PROVIDE STEEL BOXES, PANELS AND ENCLOSURES. COMPLY WITH DIVISION 26 REQUIREMENTS AND APPLICABLE CODE.
E. UNLESS OTHERWISE NOTED, BOXES AND ENCLOSURES SHALL BE NOT LESS THAN 2-1/8 INCHES DEEP. PROVIDE THE LARGER OF THE SIZE REQUIRED BY APPLICABLE CODE OR AS SHOWN ON DRAWINGS. COORDINATE WIRE AND CABLE BEND RADIUS WITH BOX AND ENCLOSURE SIZE.
F. PULL BOXES: PROVIDE AS REQUIRED BY THE MOST RESTRICTIVE OF APPLICABLE CODE OR THE PROVISIONS OF DIVISION 16. COORDINATE WITH WIRE AND CABLE BEND RADIUS.
G. PULLBOXES SHALL NOT BE USED IN LIEU OF CONDUIT BEND.

7. RACEWAY

A. RACEWAY FOR ALL WORK IN THIS SECTION SHALL BE EMT.
B. CCTV RACEWAY SHALL BE 1" DIAMETER TRADE SIZE UNLESS OTHERWISE NOTED. ACCESS CONTROL AND INTRUSION DETECTION RACEWAY SHALL BE 3/4" DIAMETER TRADE SIZE UNLESS OTHERWISE NOTED.
C. CONDUIT WITH FIBER OPTIC CABLE INSTALLED, MUST CONFORM TO THE MINIMUM BEND RADIUS AS SPECIFIED BY THE MANUFACTURER OF THE CABLE. DIVISION 26 CONTRACTOR IS TO APPLY RADIUS BENDS WHERE NEEDED. FIBER BEND RADIUS SHALL BE A MINIMUM LONG-TERM LOW-STRESS RADIUS NOT LESS THAN 20 TIMES THE CABLE DIAMETER.
D. KEEP A MINIMUM OF 12" CLEAR BETWEEN ELECTRICAL CONDUIT AND LOW VOLTAGE CONDUIT.
E. PVC CONDUITS ARE NOT ACCEPTABLE FOR SECURITY SYSTEM INSTALLATION

8. GROUNDING AND BONDING

COMPLY WITH ALL APPLICABLE CODES AND ORDINANCES. REFER TO 2019 CALIFORNIA BUILDING CODE, 2019 CALIFORNIA ELECTRICAL CODE.

A. BOND RACEWAY AND RELATED BOXES, PANELS, ENCLOSURES AND CABINETS AS REQUIRED BY APPLICABLE CODE AND DIVISION 26.
B. MAKE RACEWAY CONNECTIONS TO EQUIPMENT RACKS AND SIMILAR EQUIPMENT ENCLOSURES CONTAINING POWERED EQUIPMENT WITH ISOLATED FITTINGS.
C. GROUND AND BOND EQUIPMENT RACKS AND SIMILAR EQUIPMENT ENCLOSURES CONTAINING POWERED EQUIPMENT EXCLUSIVELY VIA THE ISOLATED EQUIPMENT GROUNDING CONDUCTORS PROVIDED UNDER DIVISION 16. SIZE SUCH CONDUCTORS ACCORDING TO APPLICABLE CODE.
D. D.C. RESISTANCE BETWEEN THE ISOLATED EQUIPMENT GROUNDING BUS AT EQUIPMENT ROOM TECHNICAL POWER PANELS AND THE MAIN PROJECT GROUND FIELD SHALL NOT EXCEED 0.15 OHMS.

9. CABLE AND WIRE

A. USE PLENUM RATED WIRE WHERE REQUIRED BY CODE.
B. ALL WIRE DISTRIBUTION TO EQUIPMENT RACK TO BE PLENUM RATED AS NEEDED.
C. CABLE SPLICING NOT ALLOWED IN ANY PULLBOXES.

11. INSTALLATION NOTES

THE FOLLOWING GENERAL NOTES ARE APPLICABLE AS INDICATED BELOW UNLESS OTHERWISE NOTED ON THE DRAWINGS. THE SYMBOLS ARE DIAGRAMMATICAL, REFER TO DETAILS, TABLES AND ELEVATION FOR INSTALLATION AND MOUNTING HEIGHT.

A. ALL INSTALLATIONS SHALL BE BASED ON THE LATEST NEC AND AHJ STANDARDS.
B. ELECTRIC STRIKE, ELECTRIFIED LOCK, ELECTRIC LATCH RETRACTION AND POWER SUPPLY, BATTERY POWERED WIRELESS LOCKS, ELECTRIFIED HINGE, ARE FURNISHED AND INSTALLED BY DOOR HARDWARE CONTRACTOR. SC TO WIRE AND CONNECT TO ACCESS CONTROL PANEL OR SECURITY POE SWITCH, PROVIDE DC POWER AND BATTERY BACK-UP TO OTHER LOCKS.
C. EC SHALL PROVIDE 120 VAC, 60HZ, 15AMP, 1 PHASE TO SECURITY PANELS UNLESS OTHERWISE NOTED. DEDICATED CIRCUIT SHALL BE FROM THE NEAREST EMERGENCY POWER PANEL SERVING SECURITY SYSTEMS.
D. ALL ACCESS CONTROL CONDUITS FROM THE PULL BOX ABOVE THE DOOR TO THE DEVICE LOCATION SHALL BE 3/4” MINIMUM UNLESS OTHERWISE NOTED. FROM THE PULL BOX TO THE ACCESS CONTROL PANEL SHALL BE 1 1/4” MINIMUM UNLESS OTHERWISE NOTED. FURNISHED AND INSTALLED BY EC.
E. ALL INTRUSION ALARM AND INTERCOM CONDUIT SHALL BE 3/4” MINIMUM UNLESS OTHERWISE NOTED. FURNISHED AND INSTALLED BY EC.
F. ALL VIDEO SURVEILLANCE SYSTEM CONDUIT SHALL BE 3/4” MINIMUM UNLESS OTHERWISE NOTED. FURNISHED AND INSTALLED BY EC.
G. EC SHALL FURNISH AND INSTALL ALL CONDUITS AND ACCESSORIES, CABLE TRAY, STANDARD BACK BOXES, PULL BOXES, GROUNDING, BONDING AND PULL STRING. PULL STRING SHALL BE LABELED AT BOTH ENDS. ALL PULL BOXES AND CABLE TRAY SHALL BE ACCESSIBLE.
H. SC SHALL FURNISH SPECIALTY BACK BOXES AND INSTALLED BY EC.
I. ALL WIRING, TERMINATION, INSTALLATION AND TESTING SHALL BE AS PER MANUFACTURES GUIDELINES AND PROCEDURES.
J. ALL SCANNING, CORING PENETRATION, FIRE STOP BY EC.
K. REFER TO ARCHITECTURAL DRAWINGS FOR WALL PENETRATION AND ACOUSTIC SEALING REQUIREMENTS.
L. PAINTING, PATCHING AND MAKING GOOD OF MATERIALS AND DEVICES SHALL BE APPROVED BY THE ARCHITECT.

10. GENERAL

A. IN THE EVENT THAT THESE PLANS, NOTES OR DETAILS OR ANY PART OR PORTION THEREOF ARE USED BY ANY THIRD-PARTY WITHOUT THE EXPRESS AUTHORIZED PERMISSION OF VENEKLASEN ASSOCIATES, THE UNAUTHORIZED USER AND ANYONE BENEFITING THEREFROM, SHALL DEFEND, INDEMNIFY AND HOLD HARMLESS VENEKLASEN ASSOCIATES AND ITS AGENTS, PRINCIPALS, EMPLOYEES AND CONSULTANTS FROM AND AGAINST ANY AND ALL CLAIMS, INCLUDING ATTORNEYS' FEES ARISING OUT OF SAID UNAUTHORIZED USE.
B. FURTHERMORE, THE UNAUTHORIZED USE OF THESE PLANS, NOTES, DETAILS OR ANY PART OR PORTION THEREFORE IS EXPRESSLY PROHIBITED AND VENEKLASEN ASSOCIATES RETAINS A COPYRIGHT OVER ANY AND ALL DOCUMENTS PREPARED BY VENEKLASEN ASSOCIATES.
C. IN THE EVENT THAT THE INSTALLER DEVIATES FROM THE PLANS AND SPECIFICATIONS PREPARED BY VENEKLASEN ASSOCIATES WHICH RESULTS IN DAMAGE TO PERSONS OR PROPERTY OF ANY KIND, INSTALLER HEREBY AGREES TO DEFEND, INDEMNIFY AND HOLD HARMLESS VENEKLASEN ASSOCIATES, ITS AGENTS, PRINCIPALS, EMPLOYEES AND CONSULTANTS FROM AND AGAINST ANY AND ALL CLAIMS, INCLUDING ATTORNEYS' FEES CAUSED BY SUCH FAILURE TO FOLLOW THE PLANS AND SPECIFICATIONS PREPARED BY VENEKLASEN ASSOCIATES, EXCEPTING ONLY THE DAMAGES TO PERSONS OR PROPERTY WHICH ARE CAUSED BY THE SOLE NEGLIGENCE OR WILLFUL MISCONDUCT OF VENEKLASEN ASSOCIATES.
D. DRAWINGS ARE DIAGRAMMATIC AND ARE INTENDED TO CONVEY SCOPE OF WORK AND TO INDICATE GENERAL ARRANGEMENT. THESE ARE NOT INTENDED TO SHOW EVERY DETAIL INCLUDING OFFSET OR FITTING OR EVERY STRUCTURAL DIFFICULTY THAT MAY BE ENCOUNTERED DURING THE WORK. EXCEPT AS OTHERWISE INDICATED, LOCATIONS OF ITEMS ARE APPROXIMATE ONLY. EXACT LOCATIONS NECESSARY TO SECURE PROPER CONDITIONS AND RESULTS MUST BE DETERMINED AT PROJECT SITE AND MUST BE APPROVED BY THE OWNER'S REPRESENTATIVE.
E. EXCEPT AS OTHERWISE INDICATED, MAKE REASONABLE MODIFICATIONS IN LAYOUT AS NEEDED TO PREVENT CONFLICT WITH OTHER WORK OR PROPER EXECUTION OF WORK.
F. INCLUDE WORK NOT USUALLY SHOWN OR SPECIFIED, BUT NECESSARY FOR PROPER INSTALLATION AND OPERATION OF A SYSTEM OR PIECE OF EQUIPMENT IN WORK.

GENERAL CONTRACTOR - RESPONSIBILITY MATRIX

ELECTRICAL CONTRACTOR TO PROVIDE:	CABLING CONTRACTOR TO PROVIDE:	SECURITY CONTRACTOR TO PROVIDE:
• BACK BOXES • SINGLE GANG MUD RING • CONDUITS • SLEEVES • FIRESTOPPING • PULL STRING • KNOX BOX • MISC: PANELS, MOUNTING HARDWARE, LADDER RACK, ETC. AND ANY OTHER RELATED COMPONENT TO DELIVER A COMPLETE SYSTEM TO THE CLIENT.	• CAT 6A CABLES • CAT 6A JACKS • CAT6A FIELD TERMINATED PLUG • COAX CABLES • FACE PLATE • PATCH PANEL • WALL MOUNT RACK • WIRE MANAGER • COMPRESSION CONNECTOR • J-HOOKS • MISC: PANELS, CABLE, MOUNTING HARDWARE, JACKS, ETC. AND ANY OTHER RELATED COMPONENT TO DELIVER A COMPLETE SYSTEM TO THE CLIENT.	• INTRUSION DETECTION EQUIPMENT AND DEVICES • ACCESS CONTROL EQUIPMENT AND DEVICES • DOOR CONTACTS • SECURITY SYSTEM • ALL CABLES FOR SECURITY SYSTEM • CCTV CAMERAS • CCTV CAMERA MOUNTS • SECURITY PoE SWITCH • TAMPER SWITCH • MISC: PANELS, CABLE, MOUNTING HARDWARE, SOFTWARE, JACKS, LADDER RACK, ETC. AND ANY OTHER RELATED COMPONENT TO DELIVER A COMPLETE SYSTEM TO THE CLIENT.

SHEET INDEX

100% PRELIMINARY DESIGN - 2/28/2024

Sheet Index

Sheet Number	Sheet Title	
SC001	SECURITY GENERAL NOTES AND SHEET INDEX	X
SC002	SECURITY ABBREVIATIONS NOTES AND SYMBOLS	X
SC100	SECURITY SITE PLAN	X
SC111	SECURITY FIRST FLOOR PLAN	X
SC112	SECURITY SECOND FLOOR PLAN	X
SC401	SECURITY RISER DIAGRAM	X
SC601	SECURITY DETAILS	X
SC602	SECURITY DETAILS	X

PAUL MURDOCH ARCHITECTS

6310 SAN VICENTE BLVD. SUITE 400
LOS ANGELES, CA 90048
T. 310 358-0993

THE DRAWINGS AND SPECIFICATIONS AND IDEAS, DESIGNS, AND ARRANGEMENTS REPRESENTED THEREBY ARE AND SHALL REMAIN THE PROPERTY OF THE ARCHITECT, AND NO PART THEREOF SHALL BE COPIED, DISCLOSED TO OTHERS, OR USED IN CONNECTION WITH ANY WORK OR PROJECT OTHER THAN THE SPECIFIC PROJECT FOR WHICH THEY HAVE BEEN PREPARED AND DEVELOPED WITHOUT THE WRITTEN CONSENT OF THE ARCHITECT. VISUAL CONTACT WITH THESE DRAWINGS OR SPECIFICATIONS SHALL CONSTITUTE CONCLUSIVE EVIDENCE OF ACCEPTANCE OF THESE RESTRICTIONS. WRITTEN DIMENSIONS ON THESE DRAWINGS SHALL HAVE PRECEDENCE OVER SCALED DIMENSIONS. CONTRACTORS SHALL VERIFY AND BE RESPONSIBLE FOR ALL DIMENSIONS AND CONDITIONS ON THE JOB AND THIS OFFICE MUST BE NOTIFIED OF ANY VARIATIONS FROM THE DIMENSIONS AND CONDITIONS SHOWN BY THESE DRAWINGS. SHOP DETAILS MUST BE SUBMITTED TO THIS OFFICE FOR REVIEW BEFORE PROCEEDING WITH FABRICATION.

Veneklasen Associates
Consultants In Acoustics | AV | IT | Security | Environmental Noise
1711 Sixteenth Street
Santa Monica, CA 90404
(310) 450-1733
www.veneklasen.com

NO. DATE REVISION

allcove
BEACH CITIES
HEALTH DISTRICT

100% PRELIMINARY DESIGN SUBMITTAL

PMA PROJECT NO.
23007

DRAWING TITLE
SECURITY GENERAL NOTES AND SHEET INDEX

SCALE
AS NOTED

DATE
02/28/2024

DRAWN ---
CHECKED ---

SHEET NO.
SC001

ABBREVIATIONS

℄	CENTER LINE
AAB	ADDITIVE ALTERNATIVE BID
ABB	ABBREVIATION
ACT	ABOVE COUNTER TOP
ACP	ACCESS CONTROL PANEL
ADM	ADMINISTRATION
AFB	ABOVE FLOOR BELOW
AFC	ABOVE FINISHED CEILING
AFF	ABOVE FINISHED FLOOR
AFG	ABOVE FINISHED GRADE
AH	ABOVE HEADER
AHJ	AUTHORITY HAVING JURSIDICTION
AS	ABOVE SLAB
AWG	AMERICAN WIRE GAUGE
BAF	BELOW ACCESS FLOOR
BC	BONDING CONDUCTOR
BDF	BUILDING DISTRIBUTION FRAME
BFC	BELOW FINSIHED CEILING
BMS	BUILDING MANAGEMENT SYSTEM
BTU	BRITISH THERMAL UNITS
CAB	CABLE
CBN	CABINET
CBT	CABLE TRAY
CCT	CIRCUIT
CCTV	CLOSED CIRCUIT TELEVISION
CM	CONSTRUCTION MANAGER
CNDR	CONDUCTOR
CO	CONDUIT ONLY
CON	CONNECTOR
CU	COPPER
C/W	COMPLETE WITH
DEV	DEVICE
DHC	DOOR HARDWARE CONTRACTOR
DIA	DIAMETER
DR	DOOR HARDWARE CONTRACTOR
DWG	DRAWING
DWR	Drawer
(E)###	EXISTING
E.C.	EMPTY CONDUIT
EBC	EQUIPMENT BONDING CONDUCTOR
EC	ELECTRICAL CONTRACTOR
EF	ENTRANCE FACILITY
EL	ELEVATION
ELB	ELECTRICAL BOX
ELEC	ELECTRICAL
EMT	ELECTRICAL METALLIC TUBING
ENC	ENCLOSURE
ENT	ELECTRICAL NONMETALLIC TUBING
EOL	END OF LINE
EQ	EQUIPMENT
ER	EQUIPMENT ROOM (MAIN COMPUTER ROOM)
EXT	EXTERNAL
(F)	FUTURE
FACP	FIRE ALARM CONTROL PANEL
FAN	FAN PANEL
FBEC	FURNISH BY ELECTRICAL CONTRACTOR
FBGC	FURNISH BY GENERAL CONTRACTOR
FBO	FURNISH BY OTHER
FBSC	FURNISH BY SECURITY CONTRACTOR
FC	FLEXIBLE CONDUIT
FLSC	FIRE LIFE SAFETY CONTRACTOR
FOC	FIBER OPTIC CABLE
FOV	FIELD OF VIEW
FT	FOOT OR FEET
G	GROUND
GC	GENERAL CONTRACTOR
GNM	GOOSE NECK MOUNT
GRC	GALVANIZED RIGID CONDUIT
HT	HEIGHT
HNG	HINGE
HR	HOME RUN
HFOV	HORIZONTAL FIELD OF VIEW
IAP	INTRUSION ALARM PANEL
I.D	INSIDE DIMENSION
ID	IDENTIFICATION
IDF	INTERMEDIATE DISTRIBUTION FRAME
INC	INCLUDED
IOR	INSPECTOR OF RECORD
IW	IN WALL
JB	JUNCTION BOX
KSW	KEY SWITCH
LA	LOCAL ALARM
LAN	LOCAL AREA NETWORK
LK	LOCK
LP	LIGHTNING PROTECTOR
MAG	MAGNET
MATV	MASTER ANTENNA TV
MAX	MAXIMUM
MDF	MAIN DISTRIBUTION FRAME
MIN	MINIMUM
MISC	MISCELLANEOUS
MM	MULTIMODE (OPTICAL FIBER)
MOM	MOMENTARY
MORT	MORTISE
MTD	MOUNTED
NC	NORMALLY CLOSED
NCC	NURSE CALL CONTRACTOR
NCS	NURSE CALL SYSTEM
NEC	NATIONAL ELECTRICAL CODE
NIC	NOT IN CONTRACT
NO	NORMALLY OPEN

NTS	NOT TO SCALE
OC	ON CENTER
OD	OUTER DIAMETER
OF	OPTICAL FIBER
OFCI	OWNER FURNISHED CONTRACTOR INSTALLED
OFE	OWNER FURNISHED EQUIPMENT
OFOI	OWNER FURNISHED OWNER INSTALLED
OSP	OUTSIDE PLANT
P/O	PART OF
PB	PULL BOX
PBX	PRIVATE BRANCH EXCHANGE
PH	PHASE
PLM	PLENUM
PNL	PANEL
POE	POWER OVER ETHERNET
POS	POINT OF SALE
PREP	PREPARATION
PROJ	PROJECT
PROT	PROTECTED TERMINAL
PSCH	PROJECT STANDARD CONTROL HEIGHT
PSRH	PROJECT STANDARD RECEPTACLE HEIGHT
PSSH	PROJECT STANDARD SWITCH HEIGHT
PTZ	PAN TILT ZOOM
PVC	POLYVINYL CARBONATE
PWR	POWER
PWS	POWER SUPPLY
RCP	REFLECTED CEILING PLAN
RCWY	RACEWAY
RES	RESISTOR
REX	REQUEST TO EXIT
RF	RADIO FREQUENCY
RLY	RELAY
RM	ROOM
SC	SECURITY CONTRACTOR
SECT	SECTION
SHP	SHIELDED PAIR
SHLD	SHIELDED
SM	SINGLE MODE (OPTICAL FIBER)
SQ	SQUARE
STD	STANDARD
STP	SHIELDED TWISTED PAIR
SW	SWITCH
SYM	SYMBOL
TBB	TELECOMMUNICATIONS BONDING BACKBONE
TBD	TO BE DETERMINED
TC	TELECOMMUNICATIONS CLOSET
TE	TELECOMMUNICATIONS ENCLOSURE
TEF	TELECOMMUNICATIONS ENTRANCE FACILITY
TER	TELECOMMUNICATIONS EQUIPMENT ROOM (PBX)
TGB	TELECOMMUNICATIONS GROUNDING BUSBAR
TMGB	TELECOMMUNICATIONS MAIN GROUNDING BUSBAR
TR	TELECOMMUNICATIONS ROOM
TTB	TELEPHONE TERMINAL BOARD
TYP	TYPICAL
UBC	UNIFORM BUILDING CODE
UG	UNDERGROUND
UON	UNLESS OTHERWISE NOTED
UPS	UNINTERRUPTIBLE POWER SUPPLY
UTP	UNSHIELDED TWISTED PAIR
V	VOLTS / VOLTAGE
VIF	VERIFY IN FIELD
W	WATTS
W/	WITH
W/ O	WITH OUT
WAP	WIRELESS ACCESS POINT
WP	WEATHER PROOF
WT	WATER TIGHT

SECURITY SYMBOLS SCHEDULE

F FLOOR MOUNTED
W WALL MOUNTED
C CEILING MOUNTED
I INTERGRATED (MILLWORK, PODIUM, TABLE)

BOX MOUNTED BELOW
BOX MOUNTED ABOVE

FIXED CAMERA

CAM# FIXED DOME CAMERA - CEILING MOUNTED
CAM# FIXED DOME CAMERA - WALL MOUNTED
CAM# 180 DOME CAMERA - CEILING MOUNTED
CAM# 180 DOME CAMERA - WALL MOUNTED
CAM# 360 DOME CAMERA - CEILING MOUNTED
CAM# 360 DOME CAMERA - WALL MOUNTED
CAM# PTZ DOME CAMERA - CEILING MOUNTED
CAM# PTZ DOME CAMERA - WALL MOUNTED

TYPICAL SECURITY SYMBOL DESCRIPTIONS

MOUNTING
(E) = EXISTING TO REMAIN
(F) = FUTURE
(R) = REPLACE EXISTING
SYMBOL ID
(F)###

CAMERA ID
CAM#
FOCAL VIEW

SECURITY DETAIL CALLOUT
SECURITY DETAIL NUMBER
SECURITY DETAIL SHEET

MISC SYMBOLS

KEYNOTE
ELEVATION CALLOUT

TYPICAL SECURITY DEVICE ID ABBREVIATIONS

CARD READERS (CR)

CR1 - CONTACTLESS SMART CAR READER
CR2 - CONTACTLESS SMART CAR READER WITH KEYPAD
CR3 - MULLION CONTACTLESS SMART CAR READER
EPB - ELECTRIFIED PANIC BAR
PB - NON-ELECTRIFIED PANIC BAR

COMMUNICATION SYSTEMS (CS)

ECB - EMERGENCY CALL BOX
EP - EMERGENCY PHONE
IC - INTERCOM
GT - GUARD TOUR
VI - VIDEO INTERCOM DOOR STATION SURFACE MOUNT
VM - VIDEO INTERCOM MASTER STATION

ACCESS CONTROL SYSTEMS (ACS)

ACP - ACCESS CONTROL PANEL
AD - ACCESS CONTROL DOOR CONTROLLER
ADO - AUTOMATIC DOOR OPENER
BGS - BADGING SYSTEM
BD - BIOMETRIC DEVICE
CR - CARD READER
DO - DOOR OPERATOR
DP - DOOR POSITION SWITCH
EC - ELEVATOR CONTROL UNIT
EIP - ELEVATOR INTERFACE PANEL
EL - ELECTRIFIED LOCK - SHOWN FOR COORDINATION, SEE DIVISION 8
HB - HANDICAP PUSH BUTTON
KFR - KEYFOB READER
KP - KEYPAD
LPS - ACCESS CONTROL LOCKING POWER SUPPLY
MFC - MULTI FLOOR ELEVATOR CONTROLLER
ML - MAGNETIC LOCK
PS - POWER SUPPLY
RAR - REMOTE ACCESS READER
REX - REQUEST TO EXIT
RR - REMOTE RELEASE
WL - WIRELESS LOCK
WT - WIRELESS LOCK TRANSCEIVER

INTRUSION DETECTION SYSTEMS (IDS)

AS - ALARM SOUNDER
DP - DOOR POSITION SWITCH
DB - DURESS BUTTON
GB - GLASS BREAK
MD - MOTION DETECTOR

WIRE TYPE SCHEDULE

TYPE	APPLICATION	DESCRIPTION (FIXED INSTALL CABLE)	O.D.	MANUF.	PART NO.
SE1	ACS DOOR CONTROL	ACS DOOR MULTI CONDUCTOR CONTROL CABLE SE1.A - 18AWG / 4 COND - LOCK POWER - .180" O.D. SE1.B - 22AWG / 3 PAIR - CARD READER - .190" O.D. SE1.C - 22AWG / 2 COND - DOOR CONTACT - .120" O.D. SE1.D - 22AWG / 4 COND - REX MOTION - .140" O.D.	0.420	BELDEN	558AFS
SE2	ACS CARD READER	18 AWG / 6 COND OVERALL SHIELDED, PLENUM JACKET	0.226	BELDEN	6304FE
SE3	IDS DEVICE	18 AWG / 2 COND, PP INSULATION, UNSHIELDED, PLENUM JACKET	0.154	BELDEN	6300UE
SE4	IDS DEVICE	22 AWG / 1TW PAIR, SHIELDED, PLENUM JACKET	0.128	BELDEN	6500FE
SE7	IDS DEVICE	22 AWG / 4 COND TINNED COPPER, PVC OUTER JACKET	0.180	BELDEN	8444

PAUL MURDOCH ARCHITECTS

6310 SAN VICENTE BLVD. SUITE 400
LOS ANGELES, CA 90048
T. 310 358-0993

THE DRAWINGS AND SPECIFICATIONS AND IDEAS, DESIGNS, AND ARRANGEMENTS REPRESENTED THEREBY ARE AND SHALL REMAIN THE PROPERTY OF THE ARCHITECT, AND NO PART THEREOF SHALL BE COPIED, DISCLOSED TO OTHERS, OR USED IN CONNECTION WITH ANY WORK OR PROJECT OTHER THAN THE SPECIFIC PROJECT FOR WHICH THEY HAVE BEEN PREPARED AND DEVELOPED WITHOUT THE WRITTEN CONSENT OF THE ARCHITECT. VISUAL CONTACT WITH THESE DRAWINGS OR SPECIFICATIONS SHALL CONSTITUTE CONCLUSIVE EVIDENCE OF ACCEPTANCE OF THESE RESTRICTIONS. WRITTEN DIMENSIONS ON THESE DRAWINGS SHALL HAVE PRECEDENCE OVER SCALED DIMENSIONS. CONTRACTORS SHALL VERIFY AND BE RESPONSIBLE FOR ALL DIMENSIONS AND CONDITIONS ON THE JOB AND THIS OFFICE MUST BE NOTIFIED OF ANY VARIATIONS FROM THE DIMENSIONS AND CONDITIONS SHOWN BY THESE DRAWINGS. SHOP DETAILS MUST BE SUBMITTED TO THIS OFFICE FOR REVIEW BEFORE PROCEEDING WITH FABRICATION.

Veneklasen Associates
Consultants In Acoustics / AV / IT / Security / Environmental Noise
1711 Sunsetch Street
Santa Monica, CA 90404
(310) 450-1733
www.veneklasen.com

NO. DATE REVISION

allcove
BEACH CITIES HEALTH DISTRICT

100% PRELIMINARY DESIGN SUBMITTAL

PMA PROJECT NO.
23007

DRAWING TITLE
SECURITY ABBREVIATIONS NOTES AND SYMBOLS

SCALE
AS NOTED

DATE
02/28/2024

DRAWN ---
CHECKED ---

SHEET NO.
SC002

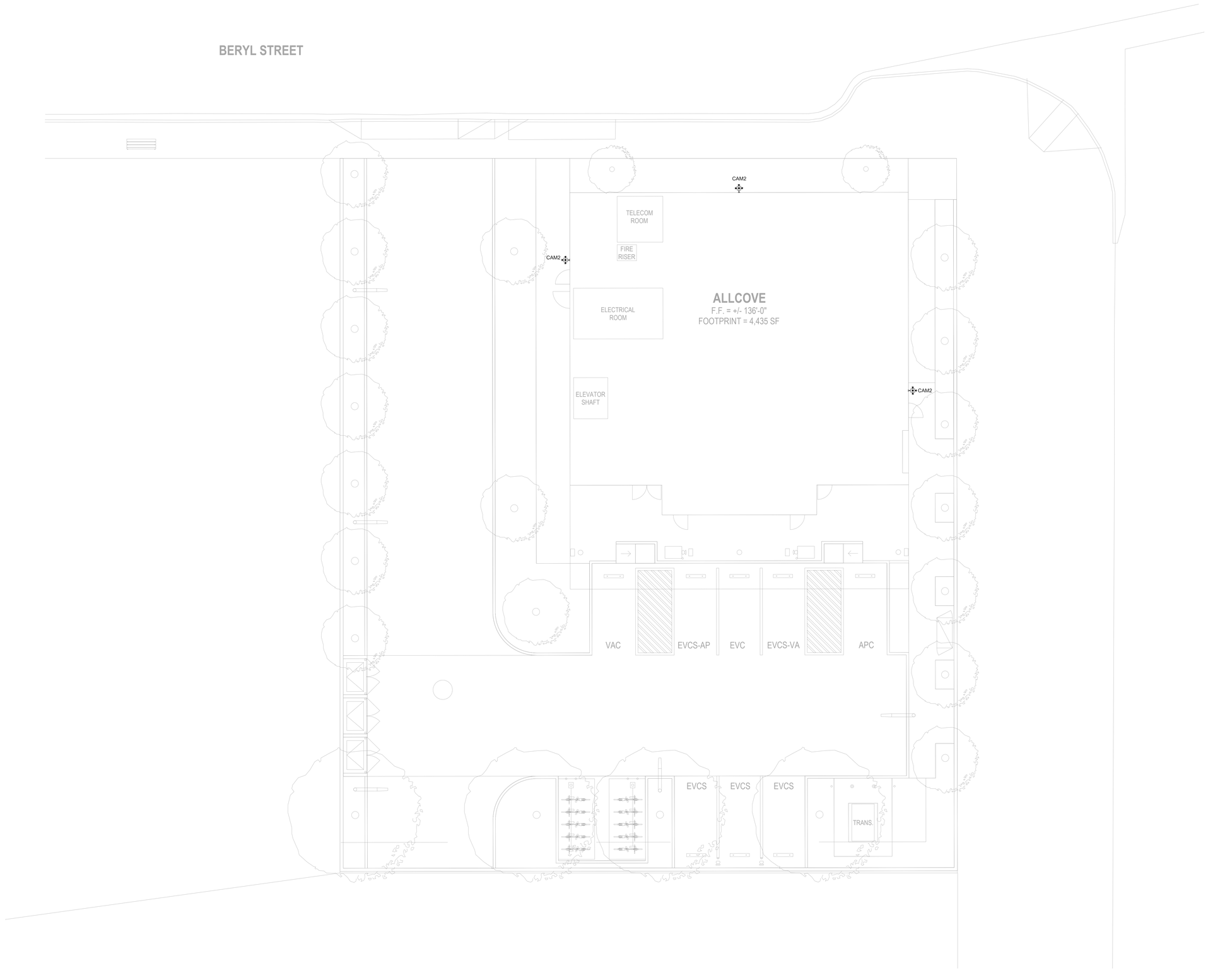

SECURITY SITE PLAN

SCALE:
1/8" = 1'-0"

1

PAUL MURDOCH ARCHITECTS

6310 SAN VICENTE BLVD. SUITE 400
LOS ANGELES, CA 90048
T. 310 358-0993

THE DRAWINGS AND SPECIFICATIONS AND IDEAS, DESIGNS, AND ARRANGEMENTS REPRESENTED THEREBY ARE AND SHALL REMAIN THE PROPERTY OF THE ARCHITECT, AND NO PART THEREOF SHALL BE COPIED, DISCLOSED TO OTHERS, OR USED IN CONNECTION WITH ANY WORK OR PROJECT OTHER THAN THE SPECIFIC PROJECT FOR WHICH THEY HAVE BEEN PREPARED AND DEVELOPED WITHOUT THE WRITTEN CONSENT OF THE ARCHITECT. VISUAL CONTACT WITH THESE DRAWINGS OR SPECIFICATIONS SHALL CONSTITUTE CONCLUSIVE EVIDENCE OF ACCEPTANCE OF THESE RESTRICTIONS. WRITTEN DIMENSIONS ON THESE DRAWINGS SHALL HAVE PRECEDENCE OVER SCALED DIMENSIONS. CONTRACTORS SHALL VERIFY AND BE RESPONSIBLE FOR ALL DIMENSIONS AND CONDITIONS ON THE JOB AND THIS OFFICE MUST BE NOTIFIED OF ANY VARIATIONS FROM THE DIMENSIONS AND CONDITIONS SHOWN BY THESE DRAWINGS. SHOP DETAILS MUST BE SUBMITTED TO THIS OFFICE FOR REVIEW BEFORE PROCEEDING WITH FABRICATION.

Veneklasen Associates
Consultants In Acoustics / AV / IT / Security / Environmental Noise
1711 Sunsetch Street
Santa Monica, CA 90404
(310) 450-1733
www.veneklasen.com

NO. DATE REVISION

allcove
BEACH CITIES
HEALTH DISTRICT

100% PRELIMINARY DESIGN SUBMITTAL

PMA PROJECT NO.
23007

DRAWING TITLE
SECURITY SITE PLAN

SCALE
AS NOTED

DATE
02/28/2024

DRAWN ---
CHECKED ---

SHEET NO.
SC100

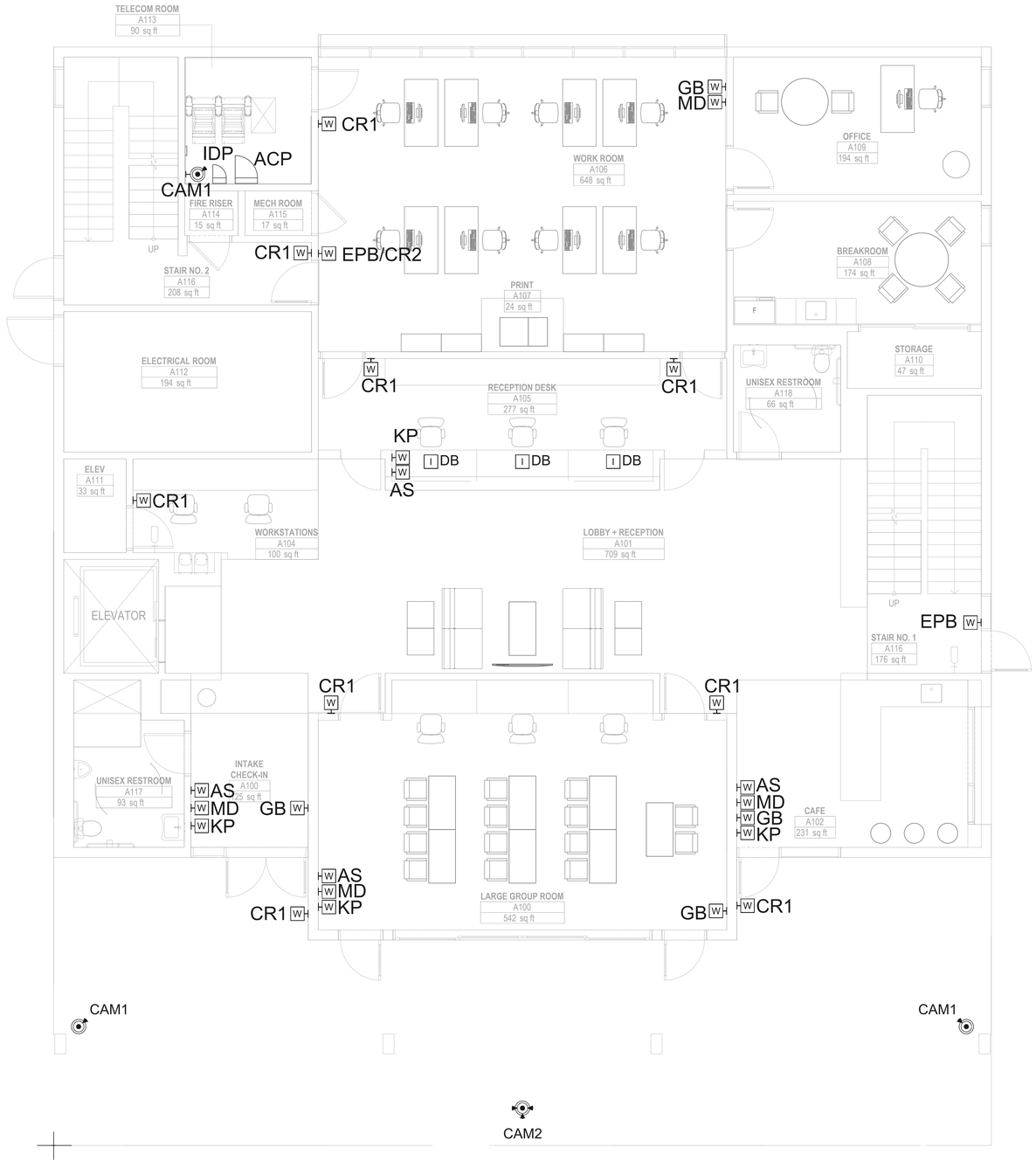

SECURITY FLOOR PLAN - FIRST FLOOR

SCALE:
1/4" = 1'-0"

1

PAUL MURDOCH
ARCHITECTS

6310 SAN VICENTE BLVD. SUITE 400
LOS ANGELES, CA 90048
T. 310 358-0993

THE DRAWINGS AND SPECIFICATIONS AND IDEAS, DESIGNS, AND ARRANGEMENTS REPRESENTED THEREBY ARE AND SHALL REMAIN THE PROPERTY OF THE ARCHITECT, AND NO PART THEREOF SHALL BE COPIED, DISCLOSED TO OTHERS, OR USED IN CONNECTION WITH ANY WORK OR PROJECT OTHER THAN THE SPECIFIC PROJECT FOR WHICH THEY HAVE BEEN PREPARED AND DEVELOPED WITHOUT THE WRITTEN CONSENT OF THE ARCHITECT. VISUAL CONTACT WITH THESE DRAWINGS OR SPECIFICATIONS SHALL CONSTITUTE CONCLUSIVE EVIDENCE OF ACCEPTANCE OF THESE RESTRICTIONS. WRITTEN DIMENSIONS ON THESE DRAWINGS SHALL HAVE PRECEDENCE OVER SCALED DIMENSIONS. CONTRACTORS SHALL VERIFY AND BE RESPONSIBLE FOR ALL DIMENSIONS AND CONDITIONS ON THE JOB AND THIS OFFICE MUST BE NOTIFIED OF ANY VARIATIONS FROM THE DIMENSIONS AND CONDITIONS SHOWN BY THESE DRAWINGS. SHOP DETAILS MUST BE SUBMITTED TO THIS OFFICE FOR REVIEW BEFORE PROCEEDING WITH FABRICATION.

Veneklasen Associates
Consultants In Acoustics / AV / IT / Security / Environmental Noise
1711 Sunsetch Street
Santa Monica, CA 90404
(310) 450-1733
www.veneklasen.com

NO. DATE REVISION

allcove
BEACH CITIES
HEALTH DISTRICT

100% PRELIMINARY DESIGN SUBMITTAL

PMA PROJECT NO.
23007

DRAWING TITLE
SECURITY FIRST FLOOR PLAN

SCALE
AS NOTED

DATE
02/28/2024

DRAWN ---
CHECKED ---

SHEET NO.
SC111

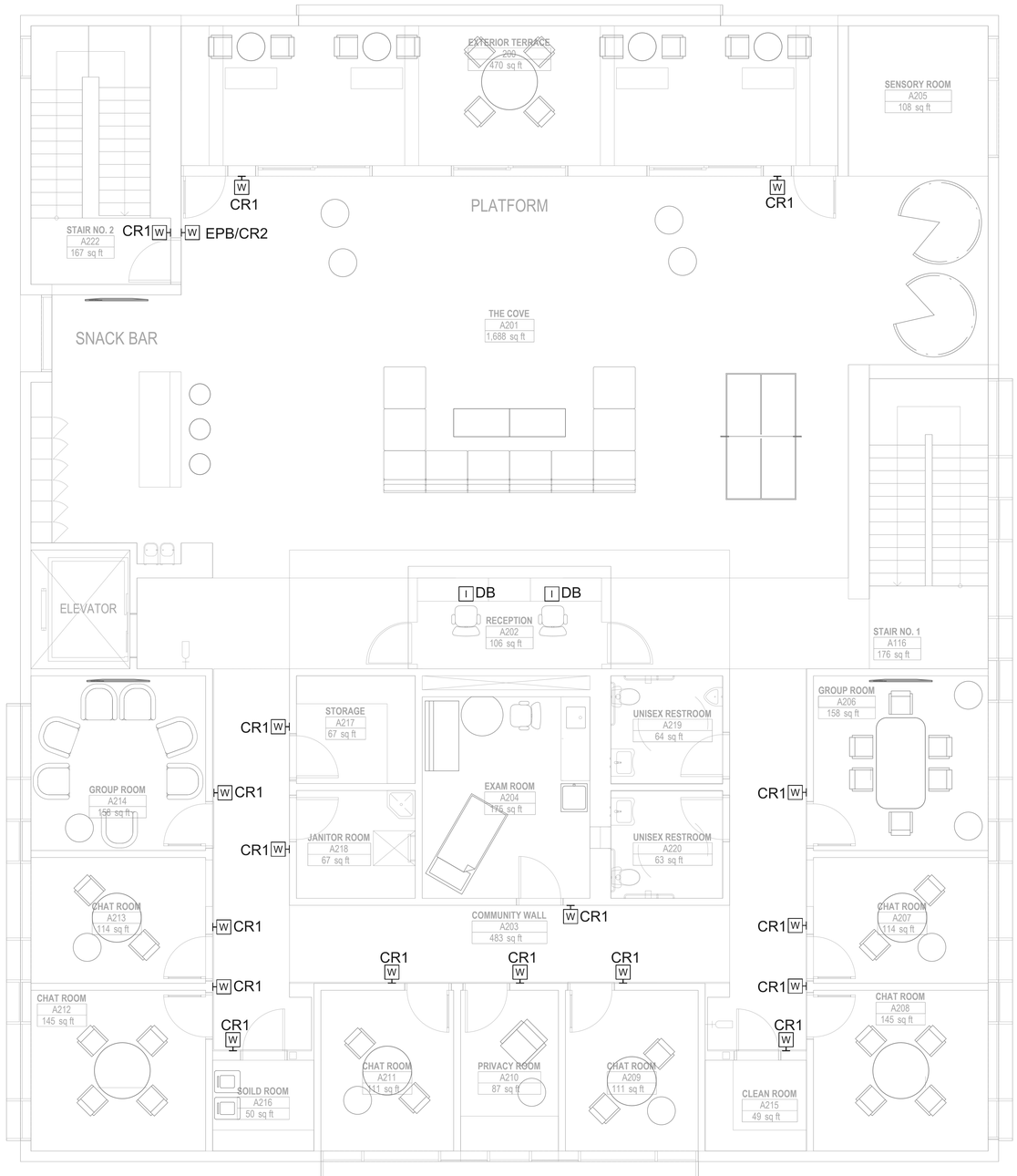

SECURITY FLOOR PLAN - SECOND FLOOR

SCALE:
1/4" = 1'-0"

1

PAUL MURDOCH
ARCHITECTS

6310 SAN VICENTE BLVD. SUITE 400
LOS ANGELES, CA 90048
T. 310 358-0993

THE DRAWINGS AND SPECIFICATIONS AND IDEAS, DESIGNS, AND ARRANGEMENTS REPRESENTED THEREBY ARE AND SHALL REMAIN THE PROPERTY OF THE ARCHITECT, AND NO PART THEREOF SHALL BE COPIED, DISCLOSED TO OTHERS, OR USED IN CONNECTION WITH ANY WORK OR PROJECT OTHER THAN THE SPECIFIC PROJECT FOR WHICH THEY HAVE BEEN PREPARED AND DEVELOPED WITHOUT THE WRITTEN CONSENT OF THE ARCHITECT. VISUAL CONTACT WITH THESE DRAWINGS OR SPECIFICATIONS SHALL CONSTITUTE CONCLUSIVE EVIDENCE OF ACCEPTANCE OF THESE RESTRICTIONS. WRITTEN DIMENSIONS ON THESE DRAWINGS SHALL HAVE PRECEDENCE OVER SCALED DIMENSIONS. CONTRACTORS SHALL VERIFY AND BE RESPONSIBLE FOR ALL DIMENSIONS AND CONDITIONS ON THE JOB AND THIS OFFICE MUST BE NOTIFIED OF ANY VARIATIONS FROM THE DIMENSIONS AND CONDITIONS SHOWN BY THESE DRAWINGS. SHOP DETAILS MUST BE SUBMITTED TO THIS OFFICE FOR REVIEW BEFORE PROCEEDING WITH FABRICATION.

Veneklasen Associates
Consultants In Acoustics / AV / IT / Security / Environmental Noise
1711 Sunsetch Street
Santa Monica, CA 90404
(310) 455-1733
www.veneklasen.com

NO. DATE REVISION

allcove
BEACH CITIES
HEALTH DISTRICT

100% PRELIMINARY DESIGN SUBMITTAL

PMA PROJECT NO.
23007

DRAWING TITLE
SECURITY SECOND FLOOR PLAN

SCALE
AS NOTED

DATE
02/28/2024

DRAWN ---
CHECKED ---

SHEET NO.
SC112

NOTES:
1. SEE TELECOM DRAWINGS FOR CABLE AND CONDUIT REQUIREMENTS

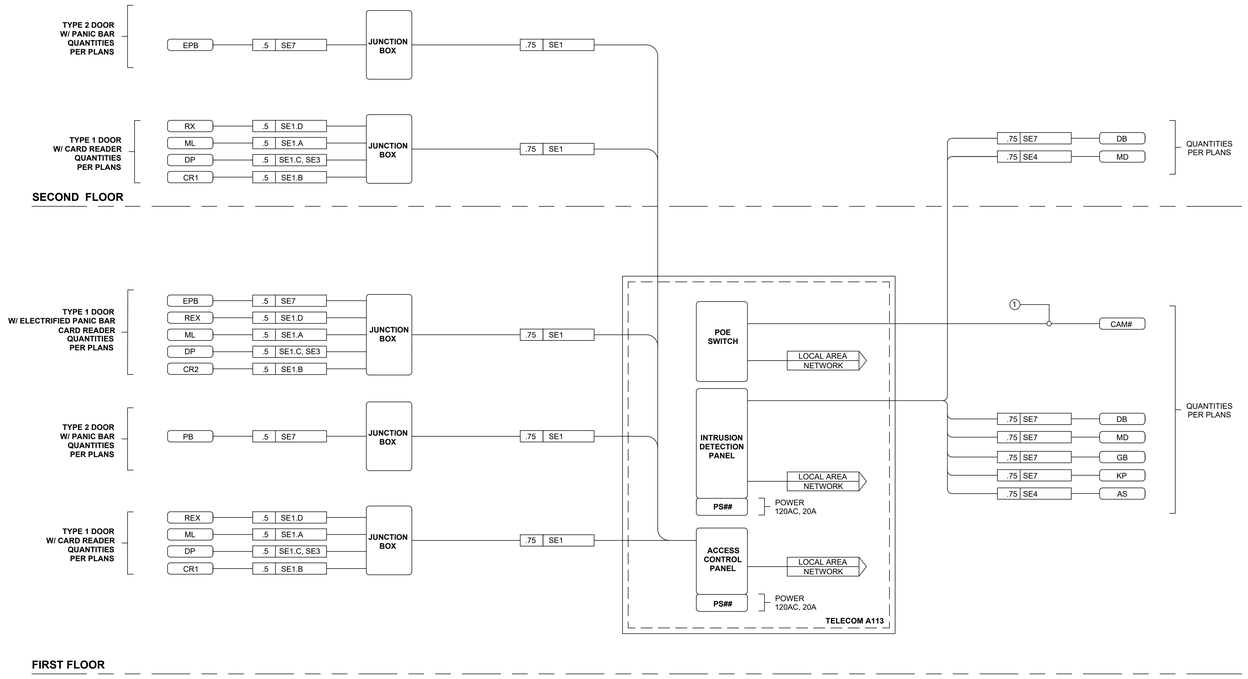

SECURITY RISER DIAGRAM

SCALE: NTS

1

PAUL MURDOCH ARCHITECTS

6310 SAN VICENTE BLVD. SUITE 400
LOS ANGELES, CA 90048
T. 310 358-0993

THE DRAWINGS AND SPECIFICATIONS AND IDEAS, DESIGNS, AND ARRANGEMENTS REPRESENTED THEREBY ARE AND SHALL REMAIN THE PROPERTY OF THE ARCHITECT, AND NO PART THEREOF SHALL BE COPIED, DISCLOSED TO OTHERS, OR USED IN CONNECTION WITH ANY WORK OR PROJECT OTHER THAN THE SPECIFIC PROJECT FOR WHICH THEY HAVE BEEN PREPARED AND DEVELOPED WITHOUT THE WRITTEN CONSENT OF THE ARCHITECT. VISUAL CONTACT WITH THESE DRAWINGS OR SPECIFICATIONS SHALL CONSTITUTE CONCLUSIVE EVIDENCE OF ACCEPTANCE OF THESE RESTRICTIONS. WRITTEN DIMENSIONS ON THESE DRAWINGS SHALL HAVE PRECEDENCE OVER SCALED DIMENSIONS. CONTRACTORS SHALL VERIFY AND BE RESPONSIBLE FOR ALL DIMENSIONS AND CONDITIONS ON THE JOB AND THIS OFFICE MUST BE NOTIFIED OF ANY VARIATIONS FROM THE DIMENSIONS AND CONDITIONS SHOWN BY THESE DRAWINGS. SHOP DETAILS MUST BE SUBMITTED TO THIS OFFICE FOR REVIEW BEFORE PROCEEDING WITH FABRICATION.

Veneklasen Associates
Consultants In Acoustics / AV / IT / Security / Environmental Noise
1711 Sunsetch Street
Santa Monica, CA 90404
(310) 450-1733
www.veneklasen.com

NO.	DATE	REVISION

allcove
BEACH CITIES HEALTH DISTRICT

100% PRELIMINARY DESIGN SUBMITTAL

PMA PROJECT NO.
23007

DRAWING TITLE
SECURITY RISER DIAGRAM

SCALE
AS NOTED

DATE
02/28/2024

DRAWN ---
CHECKED ---

SHEET NO.
SC401

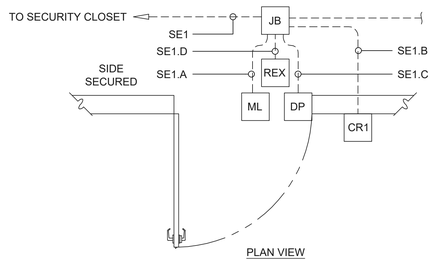

PLAN VIEW

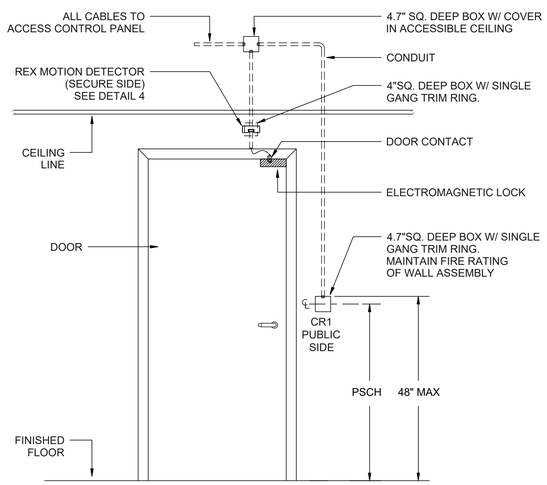

ELEVATION - PUBLIC SIDE SHOWN

TYPICAL "CR1" DOOR TYPE DETAIL | SCALE: NTS | 1

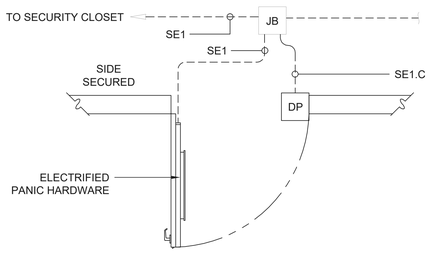

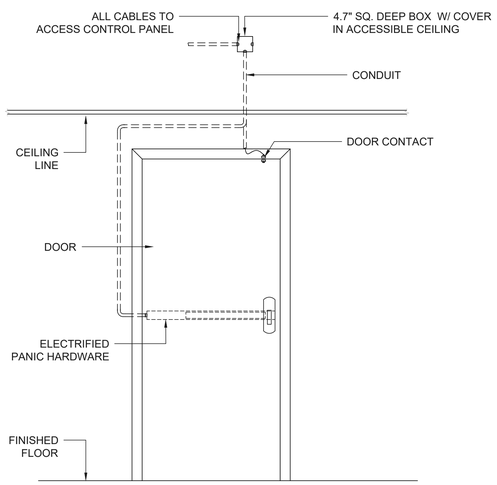

ELEVATION - PUBLIC SIDE SHOWN

TYPICAL "EPB" DOOR TYPE DETAIL | SCALE: NTS | 2

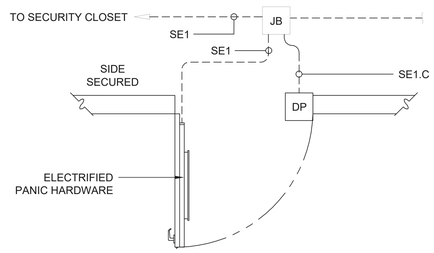

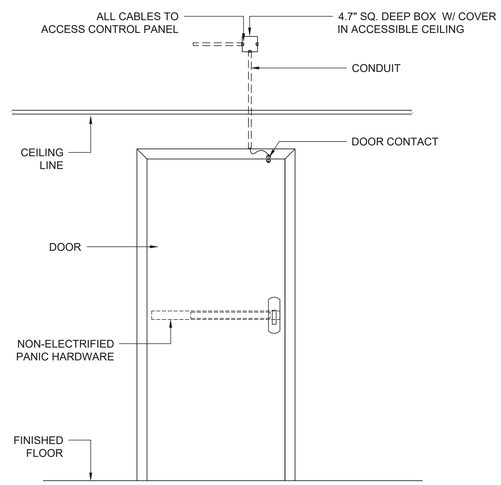

ELEVATION - PUBLIC SIDE SHOWN

TYPICAL "PB" DOOR TYPE DETAIL | SCALE: NTS | 3

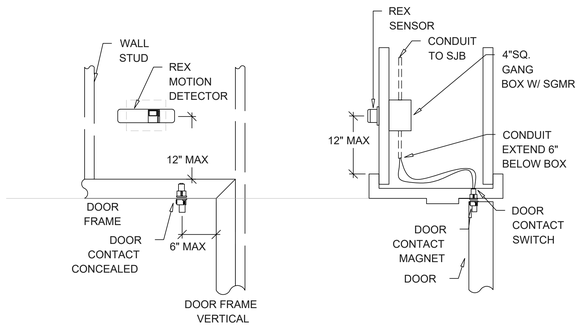

FRONT VIEW

SECTION

NOTES:

1. SEE HARDWARE SECTION FOR THE ELECTRIFIED DOOR HARDWARE TO BE USED AT THIS OPENING, COORDINATE CONNECTIONS TO DOOR HARDWARE WITH THE INSTALLER.
2. DETAILS ARE FOR REFERENCE ONLY. SEE FLOOR PLANS FOR LEFT OR RIGHT HAND PLACEMENT OF DEVICES.
3. DOOR SHALL BE PREPPED AT THE FACTORY BEFORE UL LABEL IS APPLIED.
4. IF DOOR HAS A RR (REMOTE RELEASE) ASSOCIATED TO IT THE RR WILL TRIGGER AN INPUT ON THE ACCESS CONTROL PANEL WHICH WILL ACTIVATE AN OUTPUT ON THE ACCESS CONTROL PANEL FOR THE EL (ELECTRIC LOCK).
5. REX MOUNTED ON SECURE SIDE OF DOOR.

TYPICAL REX AND DOOR CONTACT ENLARGED DETAIL | SCALE: NTS | 4

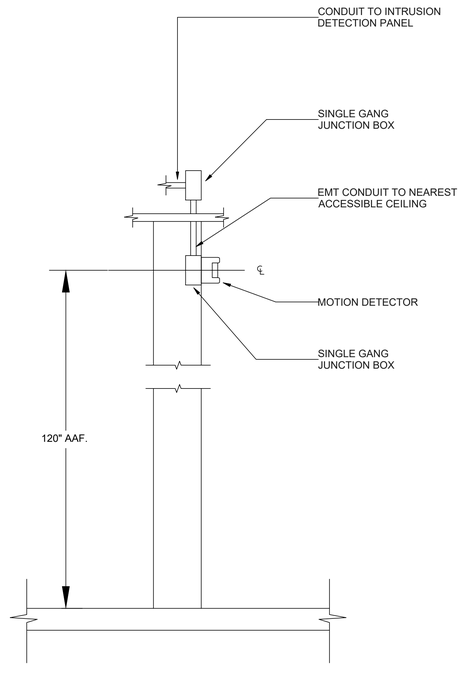

TYPICAL MOTION DETECTOR 'MD' DETAIL | SCALE: NTS | 5

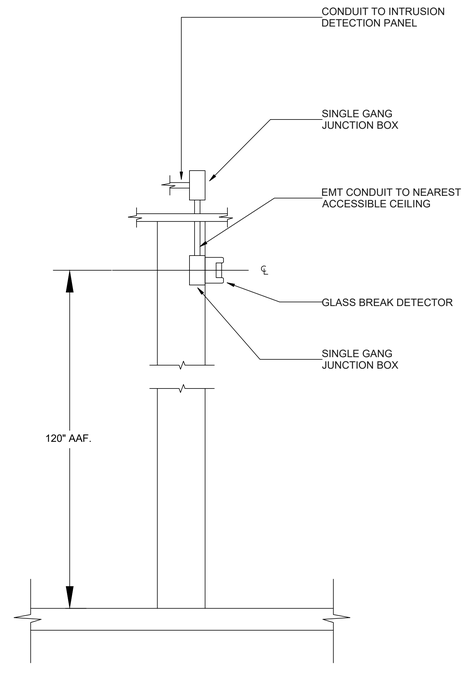

TYPICAL GLASS BREAK DETECTOR 'GB' DETAIL | SCALE: NTS | 6

PAUL MURDOCH ARCHITECTS

6310 SAN VICENTE BLVD. SUITE 400
LOS ANGELES, CA 90048
T. 310 358-0993

THE DRAWINGS AND SPECIFICATIONS AND IDEAS, DESIGNS, AND ARRANGEMENTS REPRESENTED THEREBY ARE AND SHALL REMAIN THE PROPERTY OF THE ARCHITECT, AND NO PART THEREOF SHALL BE COPIED, DISCLOSED TO OTHERS, OR USED IN CONNECTION WITH ANY WORK OR PROJECT OTHER THAN THE SPECIFIC PROJECT FOR WHICH THEY HAVE BEEN PREPARED AND DEVELOPED WITHOUT THE WRITTEN CONSENT OF THE ARCHITECT. VISUAL CONTACT WITH THESE DRAWINGS OR SPECIFICATIONS SHALL CONSTITUTE CONCLUSIVE EVIDENCE OF ACCEPTANCE OF THESE RESTRICTIONS. WRITTEN DIMENSIONS ON THESE DRAWINGS SHALL HAVE PRECEDENCE OVER SCALED DIMENSIONS. CONTRACTORS SHALL VERIFY AND BE RESPONSIBLE FOR ALL DIMENSIONS AND CONDITIONS ON THE JOB AND THIS OFFICE MUST BE NOTIFIED OF ANY VARIATIONS FROM THE DIMENSIONS AND CONDITIONS SHOWN BY THESE DRAWINGS. SHOP DETAILS MUST BE SUBMITTED TO THIS OFFICE FOR REVIEW BEFORE PROCEEDING WITH FABRICATION.

Veneklasen Associates
Consultants in Acoustics / AV / IT / Security / Environmental Noise
1717 Euclid Street
Santa Monica, CA 90404
(310) 450-1733
www.veneklasen.com

NO.	DATE	REVISION

allcove
BEACH CITIES HEALTH DISTRICT

100% PRELIMINARY DESIGN SUBMITTAL

PMA PROJECT NO.
23007

DRAWING TITLE
SECURITY DETAILS

SCALE
AS NOTED

DATE
02/28/2024

DRAWN ---
CHECKED ---

SHEET NO.
SC601

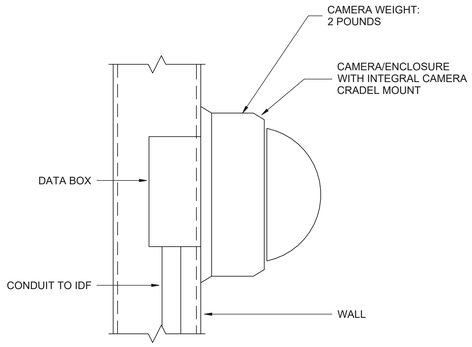

FLUSH CAMERA WALL MOUNTING DETAIL | SCALE: NTS | 1

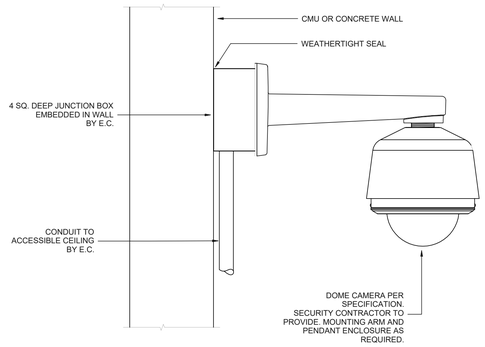

PENDANT ARM EXTERIOR CAMERA DETAIL | SCALE: NTS | 2

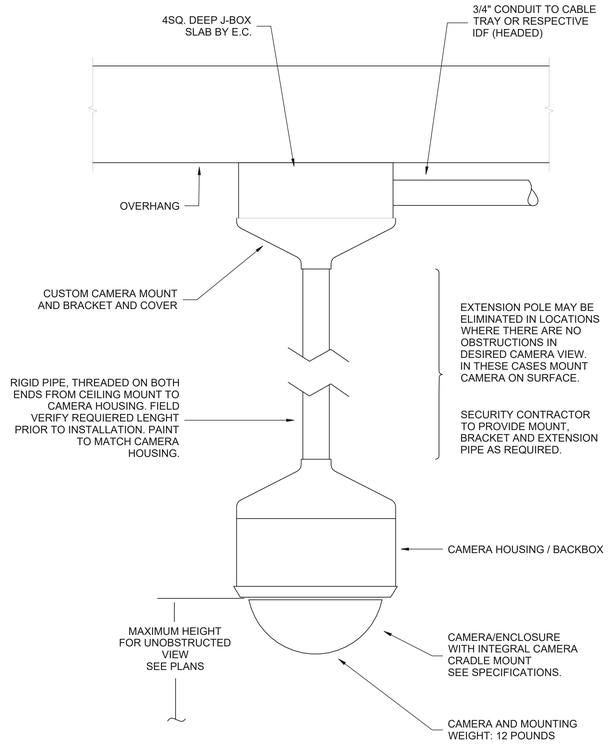

SURFACE MOUNTED CAMERA WITH POLE MOUNTING DETAIL | SCALE: NTS | 3

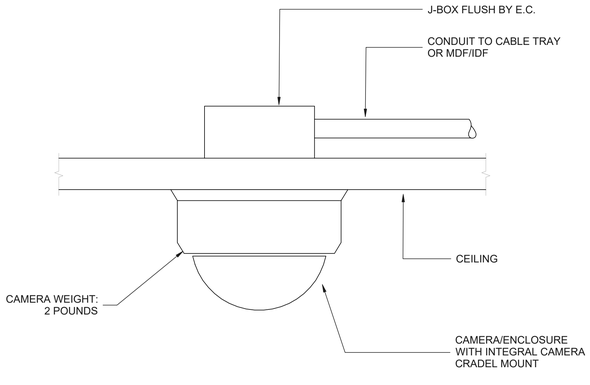

FLUSH CEILING CAMERA MOUNTING DETAIL | SCALE: NTS | 4

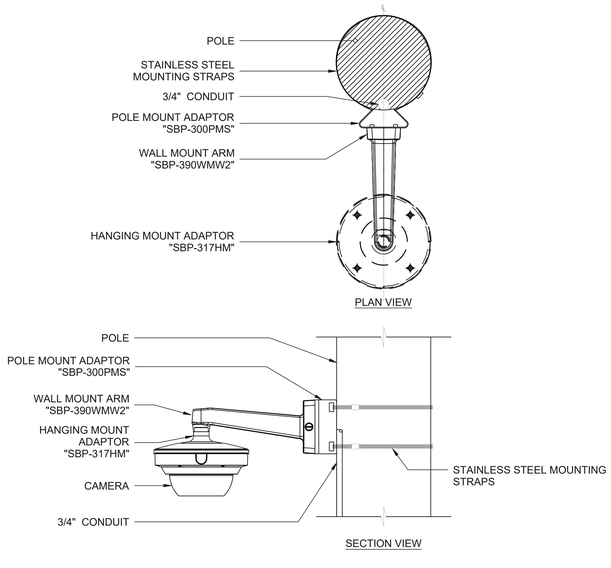

NOTE:
TYPICALLY, FOR OUTDOOR SURVEILLANCE CAMERAS IN URBAN SETTINGS, A HEIGHT OF ABOUT 11.5 FEET TO 13 FEET (ABOUT 3.5 TO 4 METERS) IS STANDARD. THIS HEIGHT IS USUALLY A GOOD COMPROMISE BETWEEN PROVIDING A WIDE FIELD OF VIEW AND CAPTURING SUFFICIENT DETAIL, WHILE ALSO KEEPING THE CAMERAS OUT OF EASY REACH FROM VANDALISM. TAKE INTO CONSIDERATION OBSTACLES WHEN DETERMINING FINAL HEIGHT.

TYPICAL POLE MOUNTED CAMERA DETAIL | SCALE: NTS | 5

PAUL MURDOCH
ARCHITECTS

6310 SAN VICENTE BLVD. SUITE 400
LOS ANGELES, CA 90048
T. 310 358-0993

THE DRAWINGS AND SPECIFICATIONS AND IDEAS, DESIGNS, AND ARRANGEMENTS REPRESENTED THEREBY ARE AND SHALL REMAIN THE PROPERTY OF THE ARCHITECT, AND NO PART THEREOF SHALL BE COPIED, DISCLOSED TO OTHERS, OR USED IN CONNECTION WITH ANY WORK OR PROJECT OTHER THAN THE SPECIFIC PROJECT FOR WHICH THEY HAVE BEEN PREPARED AND DEVELOPED WITHOUT THE WRITTEN CONSENT OF THE ARCHITECT. VISUAL CONTACT WITH THESE DRAWINGS OR SPECIFICATIONS SHALL CONSTITUTE CONCLUSIVE EVIDENCE OF ACCEPTANCE OF THESE RESTRICTIONS. WRITTEN DIMENSIONS ON THESE DRAWINGS SHALL HAVE PRECEDENCE OVER SCALED DIMENSIONS. CONTRACTORS SHALL VERIFY AND BE RESPONSIBLE FOR ALL DIMENSIONS AND CONDITIONS ON THE JOB AND THIS OFFICE MUST BE NOTIFIED OF ANY VARIATIONS FROM THE DIMENSIONS AND CONDITIONS SHOWN BY THESE DRAWINGS. SHOP DETAILS MUST BE SUBMITTED TO THIS OFFICE FOR REVIEW BEFORE PROCEEDING WITH FABRICATION.

Veneklasen Associates
Consultants In Acoustics / AV / IT / Security / Environmental Noise
1711 Sunsetch Street
Santa Monica, CA 90404
(310) 450-1733
www.veneklasen.com

NO.	DATE	REVISION

allcove
BEACH CITIES
HEALTH DISTRICT

100% PRELIMINARY DESIGN SUBMITTAL

PMA PROJECT NO.
23007

DRAWING TITLE
SECURITY DETAILS

SCALE
AS NOTED

DATE
02/28/2024

DRAWN ---
CHECKED ---

SHEET NO.
SC602